KENOSHA COUNTY
DEPARTMENT OF PUBLIC WORKS

ROAD IMPROVEMENT PROJECT
RD 16-003

IN: CTH S
AT: AMAZON WEST DRIVEWAY TO CTH H

KENOSHA COUNTY, WISCONSIN

May 2020

PA-10

KENOSHA COUNTY

PUBLIC WORKS PRE-QUALIFICATION AND PROOF OF RESPONSIBILITY

The following information will be used solely for the purpose of selecting bids unless otherwise authorized by you. It shall be kept strictly confidential. This requirement may be waived if you have successfully completed a public works project on bid for Kenosha County within the previous five years.

A. Equipment: List major items owned by your company:

_____

_____

_____

B. Experience: List work completed in recent past in same type of work bid upon. Include name and address of person or company for whom work was done and date completed:

NAME	DATE COMPLETED	FOR WHOM

C. Financial Ability:

1. What is the amount of the company's total assets?

   _____

2. What is the amount of the company's liabilities?

   _____

3. With which financial institutions may be the County inquired as to the credit rating of the company?

   _____

   _____

   _____

4. Has the company declared bankruptcy? _____

   If so, when? _____

5. Are there any judgements outstanding or pending against the company? _____

_____

If so, please describe: _____

_____

_____

By:_____
Bidder's signature or authorized representative

Signed and sworn to before me this

_____ day of _____, 20___

_____
Notary Public

My Commission Expires:_____

Company Name & Address:

_____

_____

_____

Phone: _____

Fax: _____

Please mail, e-mail, or fax this PA-10 form by the date specified in the advertisement for bids to:

Mail: Kenosha County DPW
19600 75th Street, Suite 122-1
Bristol, WI 53104-9772

Fax: 262-857-1885
Email: clement.abongwa@kenoshacounty.org

QUESTIONS ABOUT THIS PROJECT?

PLEASE CONTACT:

JOHN A. ELKIN, P.E.

OR

CALEB L. MANSKE, P.E.

AT

raSmith

CREATIVITY BEYOND ENGINEERING

PHONE: 262-781-1000

E-mail: john.elkin@rasmith.com
caleb.manske@rasmith.com

KENOSHA COUNTY DPW
ROAD IMPROVEMENT PROJECT
RD 16-003

IN: CTH S
AT: AMAZON WEST DRIVEWAY TO CTH H

KENOSHA COUNTY
WISCONSIN

May 2020

CONTRACT DOCUMENT TABLE OF CONTENTS

		No. of Pages
1.	Advertisement for Bids	2
2.	Instructions to Bidders	13
3.	Proposal	18
4.	Special Provisions	7
5.	Contract	11
6.	Payment and Performance Bond	3
7.	General Conditions	17
8.	General Specifications	1
9.	Project Specifications (See Index Preceding Project Specifications)	
10.	Plans - See Proposal for Description	

bth:T:\1165811\Doc\Proj Manual\00_Title pgs.docx

ADVERTISEMENT FOR BIDS

KENOSHA COUNTY DPW
ROAD IMPROVEMENT PROJECT
RD 16-003

IN: CTH S
AT: AMAZON WEST DRIVEWAY TO CTH H

KENOSHA COUNTY
WISCONSIN

May 2020

Notice is hereby given that Kenosha County will **ONLY** be receiving and accepting bids for the CTH S Road Improvement Project, from the Amazon West Driveway to CTH H, via the online electronic bid service through QuestCDN.com. Electronic bids will be accepted until **10:00 a.m. on the 29th day of May, 2020**. At that time, the bids will be opened, reviewed, and displayed (if accepted) through an online virtual meeting at https://global.gotomeeting.com/join/143815789. To access the electronic bid form, download the project documents and click the online bidding button at the top of advertisement. The electronic bid form will be available for completion beginning May 19, 2020.

The Contract Documents, including plans and specifications, are on file and available for inspection at the Kenosha County website at https://www.kenoshacounty.org/CivicAlerts.aspx?AID=1614. Bid results will be posted to this same website once they are verified.

All **bidders must file** a "Bidders Proof of Responsibility Form" with the Kenosha County Highway Commissioner on or before 3:00 p.m. on May 22, 2020 (Form PA-10). Bidders Proof of Responsibility Form can be submitted electronically by email at Clement.Abongwa@kenoshacounty.org.

CONTRACT DOCUMENTS may be obtained **ONLY** from QuestCDN. Bid documents may be examined online at www.rasmith.com/questcdn.htm or downloaded under login after **May 12, 2020**, for a **non-refundable fee of $40.00**. Input QuestCDN eBidDoc No. 7048756 on the website's Project Search page. Contact QuestCDN.com at 952-233-1632 or info@questcdn.com for assistance in downloading this project information or for assistance in membership registration.

A certified check or bid bond payable without condition to Kenosha County in an amount not less than five percent (5%) of the bid shall be submitted with each bid as a guarantee that if the bid is accepted a proper contract and bond will be executed and filed within ten (10) days after the acceptance of the bid. If such bidder fails to execute and file such contract and bond, the amount of the check or bid bond shall be forfeited as liquidated damages.

No bid shall be withdrawn after the opening of bids without the consent of the Kenosha County Department of Public Works for a period of sixty (60) days after the time of opening bids. Each bidder agrees upon submission of bid that if the same be accepted within said time period, he shall be bound by the terms of acceptance hereinafter contained.

The Kenosha County Department of Public Works reserves the right to reject any or all bids received, or to accept any bid which may be most advantageous to, and in the best interest of Kenosha County. Each successful bidder will be required to furnish a satisfactory performance bond in the sum of the full amount of the contract.

Approximate quantities of work to be expected are as follows:

ITEM	QTY	UNIT
Clearing & Grubbing	51	STA
Removing Pavement	31,630	SY
Removing Storm Sewer	790	LF
Excavation Common	87,800	CY
Base Aggregate Dense	86,750	TON
Breaker Run	72,500	TON
HMA Pavement	30,900	TON
Asphaltic Surface	2,150	TON
Concrete Masonry Bridges	520	CY
Bar Steel Reinforcement HS Structures	9,630	LB
Bar Steel Reinforcement HS Coated Structures	75,080	LB
Bar Steel Reinforcement HS Stainless Structures	590	LB
Rubberized Membrane Waterproofing	30	SY
Culvert Pipe Corrugated Steel	660	LF
Culvert Pipe Reinforced Concrete	970	LF
Piling Steel HP 10-Inch x 42 LB	1,485	LF
Concrete Curb & Gutter	25,200	LF
Concrete Sidewalk	12,000	SF
Storm Sewer Pipe Reinforced Concrete	4,758	LF
Manholes, Inlets, and Catch Basins	146	EACH
MGS Guardrail	960	LF
Restoration	86,600	SY
Signs Type II Reflective	930	SF
Traffic Control	520	DAYS
Marking Line Epoxy	44,800	LF
Temporary Marking Line	17,500	LF
Construction Staking	1	LS
Sawing	830	LF

Together with appurtenant construction in all contracts.

Clement Abongwa, P.E.
Highway Commissioner

Published: May 12, 2020
May 19, 2020

KENOSHA COUNTY DPW
ROAD IMPROVEMENT PROJECT
RD 16-003

IN: CTH S
AT: AMAZON WEST DRIVEWAY TO CTH H

KENOSHA COUNTY
WISCONSIN

May 2020

INSTRUCTIONS TO BIDDERS

1. Description of Improvements

Proposals are solicited by Kenosha County, hereinafter known as the Owner, for the CTH S Road Improvement Project, from the Amazon West Driveway to CTH H, in Kenosha County at the above-described locations. Prospective bidders should visit the sites of the proposed work, which will be performed to familiarize themselves with the conditions prevailing at the locations where work will be performed.

The work will include the furnishing of all labor, materials, equipment, tools, supplies, services, etc., required for the complete CTH S Road Improvement Project, Amazon West Driveway to CTH H.

Approximate quantities of work to be expected are as follows:

ITEM	DESCRIPTION	QTY	UNIT
201.0105	Clearing	58	STA
201.0120	Clearing	44	ID
201.0205	Grubbing	58	STA
201.0220	Grubbing	44	ID
203.0100	Removing Small Pipe Culverts	43	EACH
203.0200	Removing Old Structure 41+68	1	LS
204.0100	Removing Pavement	31,052	SY
204.0115	Removing Asphaltic Surface Butt Joints	48	SY
204.0150	Removing Curb & Gutter	2,698	LF
204.0155	Removing Concrete Sidewalk	141	SY
204.0170	Removing Fence	1,524	LF
204.0220	Removing Inlets	18	EACH
204.0245.06	Removing Storm Sewer 6-Inch	69	LF
204.0245.08	Removing Storm Sewer 8-Inch	61	LF
204.0245.10	Removing Storm Sewer 10-Inch	32	LF
204.0245.12	Removing Storm Sewer 12-Inch	112	LF
204.0245.18	Removing Storm Sewer 18-Inch	32	LF
204.0245.33	Removing Storm Sewer 33X49-Inch	482	LF
205.0100	Excavation Common	92,236	CY

ITEM	DESCRIPTION	QTY	UNIT
206.1000	Excavation For Structures Bridges B-30-149	1	LS
210.1500	Backfill Structure Type A	413	TON
305.0110	Base Aggregate Dense 3/4-Inch	1,553	TON
305.0120	Base Aggregate Dense 1 1/4-Inch	85,875	TON
310.0110	Base Aggregate Open-Graded	1,019	TON
311.0110	Breaker Run	84,007	TON
415.0410	Concrete Pavement Approach Slab	3,646	SY
416.0160	Concrete Driveway 6-Inch	649	SY
416.0610	Drilled Tie Bars	20	EACH
455.0605	Tack Coat	12,319	GAL
460.5223	HMA Pavement 3 LT 58-28 S	1,971	TON
460.5224	HMA Pavement 4 LT 58-28 S	1,314	TON
460.6223	HMA Pavement 3 MT 58-28 S	21,422	TON
460.6224	HMA Pavement 4 MT 58-28 S	8,569	TON
465.0105	Asphaltic Surface	1,704	TON
465.0120	Asphaltic Surface Driveways And Field Entrances	295	TON
465.0125	Asphaltic Surface Temporary	135	TON
465.0315	Asphaltic Flumes	146	SY
502.0100	Concrete Masonry Bridges	521	CY
502.3200	Protective Surface Treatment	605	SY
502.3210	Pigmented Surface Sealer	153	SY
502.4206	Adhesive Anchors No. 6 Bar	24	EACH
505.0400	Bar Steel Reinforcement HS Structures	9,630	LB
505.0600	Bar Steel Reinforcement HS Coated Structures	75,080	LB
505.0800.S	Bar Steel Reinforcement HS Stainless Structures	590	LB
511.1200	Temporary Shoring B-30-149	306	SF
516.0500	Rubberized Membrane Waterproofing	30	SY
521.1012	Apron Endwalls For Culvert Pipe Steel 12-Inch	14	EACH
521.1015	Apron Endwalls For Culvert Pipe Steel 15-Inch	4	EACH
521.1018	Apron Endwalls For Culvert Pipe Steel 18-Inch	12	EACH
521.1024	Apron Endwalls For Culvert Pipe Steel 24-Inch	2	EACH
521.1030	Apron Endwalls For Culvert Pipe Steel 30-Inch	2	EACH
521.1242	Apron Endwalls For Pipe Arch Steel 42X29-Inch	2	EACH
521.3112	Culvert Pipe Corrugated Steel 12-Inch	283	LF
521.3115	Culvert Pipe Corrugated Steel 15-Inch	57	LF
521.3118	Culvert Pipe Corrugated Steel 18-Inch	246	LF
521.3124	Culvert Pipe Corrugated Steel 24-Inch	59	LF
521.3130	Culvert Pipe Corrugated Steel 30-Inch	56	LF
521.3742	Pipe Arch Corrugated Steel 42X29-Inch	22	LF
522.0115	Culvert Pipe Reinforced Concrete Class III 15-Inch	54	LF
522.0418	Culvert Pipe Reinforced Concrete Class IV 18-Inch	125	LF
522.0430	Culvert Pipe Reinforced Concrete Class IV 30-Inch	56	LF
522.1012	Apron Endwalls For Culvert Pipe Reinforced Concrete 12-Inch	20	EACH
522.1015	Apron Endwalls For Culvert Pipe Reinforced Concrete 15-Inch	18	EACH
522.1018	Apron Endwalls For Culvert Pipe Reinforced Concrete 18-Inch	6	EACH
522.1021	Apron Endwalls For Culvert Pipe Reinforced Concrete 21-Inch	2	EACH
522.1024	Apron Endwalls For Culvert Pipe Reinforced Concrete 24-Inch	3	EACH
522.1030	Apron Endwalls For Culvert Pipe Reinforced Concrete 30-Inch	3	EACH

ITEM	DESCRIPTION	QTY	UNIT
522.2424	Culvert Pipe Reinforced Concrete Horizontal Elliptical Class HE-IV 24X38-Inch	409	LF
522.2429	Culvert Pipe Reinforced Concrete Horizontal Elliptical Class HE-IV 29X45-Inch	303	LF
522.2624	Apron Endwalls For Culvert Pipe Reinforced Concrete Horizontal Elliptical 24X38-Inch	14	EACH
522.2629	Apron Endwalls For Culvert Pipe Reinforced Concrete Horizontal Elliptical 29X45-Inch	4	EACH
522.2643	Apron Endwalls For Culvert Pipe Reinforced Concrete Horizontal Elliptical 43X68-Inch	2	EACH
550.1100	Piling Steel HP 10-Inch X 42 LB	1,485	LF
601.0411	Concrete Curb & Gutter 30-Inch Type D	146	LF
601.0557	Concrete Curb & Gutter 6-Inch Sloped 36-Inch Type D	25,837	LF
601.0588	Concrete Curb & Gutter 4-Inch Sloped 36-Inch Type TBT	100	LF
602.0410	Concrete Sidewalk 5-Inch	12,027	SF
602.0605	Curb Ramp Detectable Warning Field Radial Yellow	135	EACH
606.0200	Riprap Medium	50	CY
606.0300	Riprap Heavy	136	CY
608.0315	Storm Sewer Pipe Reinforced Concrete Class III 15-Inch	269.5	LF
608.0412	Storm Sewer Pipe Reinforced Concrete Class IV 12-Inch	2,510.7	LF
608.0415	Storm Sewer Pipe Reinforced Concrete Class IV 15-Inch	898.5	LF
608.0418	Storm Sewer Pipe Reinforced Concrete Class IV 18-Inch	156.2	LF
608.0421	Storm Sewer Pipe Reinforced Concrete Class IV 21-Inch	246.3	LF
608.0424	Storm Sewer Pipe Reinforced Concrete Class IV 24-Inch	196.4	LF
608.0430	Storm Sewer Pipe Reinforced Concrete Class IV 30-Inch	42.0	LF
608.2343	Storm Sewer Pipe Reinforced Concrete Horizontal Elliptical Class HE-III 43X68-Inch	198.9	LF
608.2424	Storm Sewer Pipe Reinforced Concrete Horizontal Elliptical Class HE-IV 24X38-Inch	407.0	LF
611.0530	Manhole Covers Type J	7	EACH
611.0545	Manhole Covers Type L	1	EACH
611.0624	Inlet Covers Type H	2	EACH
611.0627	Inlet Covers Type HM	113	EACH
611.0645	Inlet Covers Type MS-A	27	EACH
611.1004	Catch Basins 4-Ft Diameter	3	EACH
611.1005	Catch Basins 5-Ft Diameter	2	EACH
611.1230	Catch Basins 2X3-FT	21	EACH
611.2004	Manholes 4-Ft Diameter	5	EACH
611.2005	Manholes 5-Ft Diameter	3	EACH
611.2006	Manholes 6-Ft Diameter	1	EACH
611.2008	Manholes 8-Ft Diameter	1	EACH
611.3004	Inlets 4-Ft Diameter	10	EACH
611.3230	Inlets 2X3-FT	76	EACH
611.3901	Inlets Median 1 Grate	1	EACH
611.3902	Inlets Median 2 Grate	3	EACH
611.8110	Adjusting Manhole Covers	11	EACH
611.8115	Adjusting Inlet Covers	2	EACH
611.8120.S	Cover Plates Temporary	10	EACH
611.9800.S	Pipe Grates	4	EACH
612.0206	Pipe Underdrain Unperforated 6-Inch	2,689	LF

ITEM	DESCRIPTION	QTY	UNIT
612.0406	Pipe Underdrain Wrapped 6-Inch	5,560	LF
612.0700	Drain Tile Exploration	10,000	LF
612.0806	Apron Endwalls For Underdrain Reinforced Concrete 6-Inch	22	EACH
614.0150	Anchor Assemblies For Steel Plate Beam Guard	2	EACH
614.0920	Salvaged Rail	315	LF
614.0925	Salvaged Guardrail End Treatments	4	EACH
614.2300	MGS Guardrail 3	425	LF
614.2500	MGS Thrie Beam Transition	236	LF
614.2610	MGS Guardrail Terminal EAT	6	EACH
616.0206	Fence Chain Link 6-FT	86	LF
619.1000	Mobilization	1	EACH
620.0300	Concrete Median Sloped Nose	677	SF
624.0100	Water	6,353	MGAL
625.0500	Salvaged Topsoil	98,985	SY
627.0200	Mulching	26,165	SY
628.1504	Silt Fence	3,063	LF
628.1520	Silt Fence Maintenance	19,575	LF
628.1905	Mobilizations Erosion Control	15	EACH
628.1910	Mobilizations Emergency Erosion Control	10	EACH
628.2004	Erosion Mat Class I Type B	34,547	SY
628.2027	Erosion Mat Class II Type C	5,495	SY
628.6005	Turbidity Barriers	500	SY
628.7005	Inlet Protection Type A	181	EACH
628.7010	Inlet Protection Type B	24	EACH
628.7015	Inlet Protection Type C	107	EACH
628.7020	Inlet Protection Type D	59	EACH
628.7504	Temporary Ditch Checks	591	LF
628.7515.S	Stone Or Rock Ditch Checks	50	EACH
628.7555	Culvert Pipe Checks	50	EACH
628.7560	Tracking Pads	174	EACH
628.7570	Rock Bags	20	EACH
629.0210	Fertilizer Type B	65.6	CWT
630.0110	Seeding Mixture No. 10	600	LB
630.0130	Seeding Mixture No. 30	475	LB
630.0175	Seeding Mixture No. 75	42	LB
630.0200	Seeding Temporary	1,383	LB
630.0300	Seeding Borrow Pit	300	LB
630.0500	Seed Water	2,260	MGAL
631.0300	Sod Water	434	MGAL
631.1000	Sod Lawn	19,215	SY
633.5200	Markers Culvert End	72	EACH
634.0612	Posts Wood 4X6-Inch X 12-FT	8	EACH
634.0614	Posts Wood 4X6-Inch X 14-FT	20	EACH
634.0616	Posts Wood 4X6-Inch X 16-FT	80	EACH
634.0618	Posts Wood 4X6-Inch X 18-FT	4	EACH
637.2210	Signs Type II Reflective H	760.00	SF
637.2220	Signs Type II Reflective SH	6.75	SF
637.2230	Signs Type II Reflective F	184.50	SF

ITEM	DESCRIPTION	QTY	UNIT
638.2102	Moving Signs Type II	7	EACH
638.2602	Removing Signs Type II	38	EACH
638.3000	Removing Small Sign Supports	45	EACH
643.0300	Traffic Control Drums	29,835	DAYS
643.0420	Traffic Control Barricades Type III	4,725	DAYS
643.0500	Traffic Control Flexible Tubular Marker Posts	223	EACH
643.0600	Traffic Control Flexible Tubular Marker Bases	223	EACH
643.0705	Traffic Control Warning Lights Type A	9,290	DAYS
643.0900	Traffic Control Signs	43,448	DAYS
643.0920	Traffic Control Covering Signs Type II	4	EACH
643.1000	Traffic Control Signs Fixed Message	107	SF
643.1050	Traffic Control Signs PCMS	178	DAY
643.5000	Traffic Control	1	EACH
645.0111	Geotextile Type DF Schedule A	120	SY
645.0120	Geotextile Type HR	256	SY
646.1020	Marking Line Epoxy 4-Inch	41,351	LF
646.3020	Marking Line Epoxy 8-Inch	2,820	LF
646.5020	Marking Arrow Epoxy	27	EACH
646.5120	Marking Word Epoxy	8	EACH
646.6120	Marking Stop Line Epoxy 18-Inch	161	LF
646.7120	Marking Diagonal Epoxy 12-Inch	134	LF
646.7420	Marking Crosswalk Epoxy Transverse Line 6-Inch	321	LF
646.8120	Marking Curb Epoxy	400	LF
646.8220	Marking Island Nose Epoxy	10	EACH
646.9000	Marking Removal Line 4-Inch	1,306	LF
646.9010	Marking Removal Line Water Blasting 4-Inch	68	LF
646.9100	Marking Removal Line 8-Inch	208	LF
646.9110	Marking Removal Line Water Blasting 8-Inch	68	LF
646.9200	Marking Removal Line Wide	252	LF
646.9300	Marking Removal Special Marking	3	EACH
646.9310	Marking Removal Special Marking Water Blasting	3	EACH
649.0105	Temporary Marking Line Paint 4-Inch	42,768	LF
649.0150	Temporary Marking Line Removable Tape 4-Inch	11,739	LF
649.0250	Temporary Marking Line Removable Tape 8-Inch	436	LF
649.0550	Temporary Marking Arrow Removable Tape	7	EACH
649.0650	Temporary Marking Word Removable Tape	3	EACH
649.0805	Temporary Marking Stop Line Paint 18-Inch	48	LF
649.0850	Temporary Marking Stop Line Removable Tape 18-Inch	67	LF
649.0960	Temporary Marking Removable Mask Out Tape 6-Inch	947	LF
649.0970	Temporary Marking Removable Mask Out Tape 10-Inch	189	LF
650.4000	Construction Staking Storm Sewer	146	EACH
650.4500	Construction Staking Subgrade	17,150	LF
650.5000	Construction Staking Base	18,240	LF
650.5500	Construction Staking Curb Gutter And Curb & Gutter	26,083	LF
650.6000	Construction Staking Pipe Culverts	9	EACH
650.9000	Construction Staking Curb Ramps	6	EACH
650.9910	Construction Staking Supplemental Control RD16-003	1	LS
650.9920	Construction Staking Slope Stakes	18,240	LF

ITEM	DESCRIPTION	QTY	UNIT
690.0150	Sawing Asphalt	405	LF
690.0250	Sawing Concrete	365	LF
SPV.0060.01	Catch Basins Median 1 Grate	20	EACH
SPV.0060.02	Field Office	1	EACH
SPV.0060.03	Drain Tile Connection	20	EACH
SPV.0060.04	Utility Line Opening	10	EACH
SPV.0090.01	Silt Fence Heavy Duty	112	LF
SPV.0090.02	Asphaltic Curb Temporary	500	LF
SPV.0170.01	Proof Rolling	88	STA
SPV.0180.01	Stormwater Treatment Filter Strips	5,067	SY
SPV.0195.01	Select Crushed Material For Travel Corridor	32	TON

Together with appurtenant construction in all contracts

2. Preparation of Proposal

The Owner will **ONLY** be receiving and accepting bids for the CTH S Road Improvement Project, Amazon West Driveway to CTH H, via the online electronic bid service through QuestCDN.com. To access the electronic bid form, download the project documents and click the online bidding button at the top of advertisement. The electronic bid form will be available for completion beginning May 19, 2020, or sooner.

Along with the Bid, the Bidder must submit the Bidder's prequalification statement, bid bond or cashier's check, material supplier, and subcontractor list. The Bidder's prequalification statement and bid bond or cashier's check should be submitted electronically before the time specified in the Advertisement for Bids.

The Owner will only consider Bids submitted electronically. Bidder shall specify a unit price for each of the separate items listed in the Bid, with resulted total compiled via electronic bidding, for the total sum for which he/she will perform all the Work or furnish all of the material specified. The Owner, at its discretion, will compare Bids, in whole or in part, on a unit basis.

Bidding shall be as set forth in the electronic Bid Form. Each Bid Item shall include all of the Contractor's costs, such as transportation, insurance, bonds, delays, labor, machinery, tools, and all materials necessary with the requirements of these Specifications. Each Unit Price shall be entered to the nearest cent and no fractions of cents are allowed for these prices.

No bid will be accepted which does not contain an adequate or reasonable price for each and every item named in the Bidding Schedule on the contract bid upon.

3. Bid Bond or Bid Guarantee:

A bid may be rejected if a bidder fails to meet any one of the following insurance requirements:

(a) Each bidder shall submit with their bid a cashier's check or bid bond in the amount of five percent (5%) of the total bid price. Check or bid bonds shall be payable to Kenosha County. This check/bond is to insure against withdrawal from competition subsequent to

the bid submittal and to guarantee performance when the contract is awarded. This check/bond will be returned to all bidders immediately upon awarding the contract.

(b) The check/bond of the successful bidder will be retained until the successful bidder furnishes Kenosha County with an acceptable performance bond for 100% of the bid/contract price. The performance bond must be submitted to Kenosha County within ten (10) days from date of award. The performance bond shall be forfeited on failure to perform on any part if this specification and contract outlined in this bid or any addendums. Such bond shall be issued from a reliable surety company having a current A.M. Best rating of A- or better, licensed or otherwise authorized to do business in the State of Wisconsin and acceptable to Kenosha County.

(c) To be acceptable to Kenosha County as a surety for Bid Bonds and Performance Bonds, a Surety company shall comply with the following provisions.

i. The Surety Company must be licensed or otherwise authorized to do business in the State of Wisconsin and must be rated by A.M. Best at A- or better.
ii. The Surety Company shall have been in business and have a record of successful continuous operation for at least five years.
iii. A Wisconsin licensed resident or non-resident Agent who holds a current Power of Attorney from the Surety Company issuing the bond shall sign all bonds.

4. Prequalification Data

Each bidder must submit a prequalification statement in accordance with Section 66.0901 and as amended. Prequalification forms (Kenosha County Form PA-10) shall be submitted to the Kenosha County Director of Public Works Office located at 19600 75th Street, Bristol, Wisconsin 53104.

Any bidder may be required by the Owner to submit additional data to satisfy the Owner that such bidder is prepared to fulfill the contract if it is awarded to him.

5. Examination of Site and Specifications

(a) Bidders shall inform themselves of all the conditions under which the work is to be performed concerning the site of the work, the structure of the ground, the obstacles which may be encountered, whether shown on the plans or not, and all other relevant matters concerning the work to be performed.

The Contractor should visit the site and make himself/herself aware of site conditions in order to base his/her bid upon observed site conditions.

The Contractor to whom a Contract is awarded will not be allowed any extra compensation by reason of any such matters or things concerning which the Contractor did not inform himself prior to bidding. The successful Contractor must employ, as far as possible, such methods and means in the carrying out of his work as will not cause any interruption or interference with any other Contractors.

(b) The Bidder is expected to base his bid on materials and equipment complying fully with the Contract Drawings and Specifications, and in the event he names or includes in his bid materials or equipment which do not conform, he will, if awarded a contract, be

responsible for furnishing materials and equipment which fully conform at no change in his contract price.

(c) Nondiscrimination. In connection with work under this contract, the Contractor agrees not to discriminate against any employee or applicant for employment because of age, race, religion, color, handicap, developmental disability, or sex. The foregoing shall be interpreted liberally to forbid unjust discrimination. All complaints received in this regard by the County shall be forwarded to the County Clerk who shall refer the matter to the state or federal agency having authority to investigate and determine such charges of discrimination. A final determination finding discrimination in such a case, including any appeals taken shall make the employer ineligible to bid on contracts with the County for a period of four years from the date of such final adjudication.

(d) Bidders must satisfy themselves by personal examination of the locations of the proposed work and by such other means as they may prefer as to the correctness of any quantities listed in the Proposal, and shall not, after submission of their Proposal, dispute or complain of such estimate, nor assert that there was any misunderstanding in regard to the nature or amount of work to be done.

(e) Before submitting a Proposal, each Contractor should read the complete Contract Documents, including Advertisement for Bids, Instructions to Bidders, the Form of Contract, and the Specifications, all of which contain provisions applicable not only to the successful bidder, but also to any of his subcontractors.

6. Interpretation of Proposed Contract Documents

If any person contemplating submitting a bid for any contract on this project is in doubt as to the true meaning of any part of the Contract Drawings, Specifications, or other sections of the Contract Document, he may submit to the Owner a written request for an interpretation thereof. The person submitting the request will be responsible for its prompt delivery.

Any interpretation of the Contract Document or Contract Drawings will be made only by addendum duly issued or delivered to each person receiving a set of such documents. The Owner will not be responsible for any other explanations or interpretations of the Contract Documents or Contract Drawings.

7. Bidding Requirements

(a) Each bidder shall submit only one bid.

(b) Each bidder must submit with his Proposal, special data, if any, in respect to items of equipment, alternates, or other items which any section of the Contract Document requires to be submitted with each Proposal.

(c) Electronic bids must be submitted prior to when the countdown clock shown on the Quest vBid site has reached 0:00.

8. Approximate Quantities

In cases where any part or all of the bidding is to be received on a unit price basis, the quantities stated in the Proposal will not be used in establishing final payment due the successful Contractor. The quantities stated on which unit prices are so invited are approximate only, and each bidder shall make his own estimate from the Contract Drawings of the quantities required on each item and calculate his unit price bid for each item accordingly. Bids will be compared on the basis of number of units stated in the Bidding Schedule. Such estimated quantities, while made from the best information available, are approximate only. Payment on the contract will be based on actual number of units installed on the completed work.

9. Conditions in Contractor's Proposal

A bidder shall not stipulate in his Proposal any conditions not contained in the Form of Proposal contained in the Contract Documents.

10. "Or Equal" Clause

Whenever in any section of the Contract Documents any article, material, or equipment is defined by describing a proprietary product by using the name of a manufacturer or vendor, the term "or equal", if not inserted shall be implied. The specific article, material, or equipment mentioned shall be understood as indicating the type, function, minimum standard of design, efficiency, and quality desired and shall not be construed in such a manner as to exclude manufacturer's products of comparable quality, design and efficiency, as approved by the Engineer.

If any bidder proposes to furnish an item or material which he claims to be of equal value, utility or merit to a named product or material in the specifications, the bidder, supplier, or manufacturer shall submit a written statement to Kenosha County 5 days prior to the bid opening date. The statement shall name and describe the item or material claimed to be equal and shall include supporting data along with a request for approval.

11. Standard Manufacturer

Whenever the terms "standard", "recognized", or "reputable" manufacturer are used, they shall be construed as meaning manufacturers who have been engaged in the business of fabricating materials, equipment or suppliers of the nature called for by the Specifications for a reasonable period of time prior to the date set for opening of bids, and who can demonstrate to the satisfaction of the Owner that said manufacturer has successfully installed equipment, materials or supplies of the type proposed to be furnished in at least three instances and that the performance of such materials, equipment or supplies has been satisfactory.

Manufacturers who have been engaged in the business of manufacturing said materials, equipment or supplies for a period of over twelve months prior to the date fixed for opening bids shall, unless a longer period of time is specifically stated in the Specifications, prima facie be deemed to have been engaged in such business for a reasonable length of time.

12. Major Equipment

In cases where the Proposal Form under the paragraph titled "Major Equipment Items" includes a tabulation of the major items of equipment to be furnished and installed on the Proposal, each

bidder shall state in the space provided, the installed price of each item of equipment of the manufacturer named. In addition, he may state in the spaces provided the names of alternate manufacturers who offer equipment on this project, and the installed price for such equipment.

Prior to the award of a construction contract, the Owner will determine the source of all items of major equipment to be incorporated in the project, based on the details, expected performance, and the installed prices of the items offered in the Proposal accepted.

Each manufacturer who offers an item of major equipment on this project shall file at least ten (10) days prior to the date set for opening of bids, two (2) complete copies of a detailed description of the equipment offered, list of comparable installations, and performance curves or data. One (1) copy of such data shall be filed directly with the Engineer.

13. Material Substitution

If restrictions of any Governmental Authority prohibit the purchase or use of certain items that are required by the Contract Drawings and Specifications, substitution for such items will be determined by the Owner and the Engineer after the award of a construction contract.

Each Contractor shall base his bid on furnishing all items exactly as shown on the Contract Drawings and as described in the Contract Specifications. The successful Contractor will not be authorized to make any substitution on his own initiative, but in each and every instance must obtain a properly authorized Contract Supplement to his Contract before installing any work in variance with the Contract requirements.

14. License or Royalty Fees

If the project is designed so as to require or permit the use of a process or processes (as distinguished from article, apparatus, or equipment) for which licenses or royalty fees will be charged, such fees for the use of such processes will be paid directly by the Owner to the patentee, licensee, or owner of such a process, and bidder shall not include such fees in their bids. If by the acceptance of a bid, the Owner shall have determined to use any patented process, the Owner will enter into a separate contract with the patentee, licensee, or owner of the process, and the Owner will make payment therefore to the owner, or licensee of such patented process. This provision, however, does not apply on royalties for patented items incorporated in this work.

15. Material Tests

Attention of bidders is directed to the Material Test, which will be required on this Contract. All laboratory tests shall be made by a testing laboratory employed by the Contractor and approved by the owner. The cost of tests shall be paid by the Contractor. The Contractor shall supply and ship to the laboratory, all materials to be tested, whether indicated herein or requested by the Owner or Engineer. The cost of these materials and cost of tests shall be merged in the prices stated on items making up the Total Base Bid.

16. Supplemental Unit Prices

On a lump sum proposal or partial lump sum proposal, if the bidding schedule includes a supplementary schedule of unit prices for fixing cost basis for changes, the Owner reserves the

right to reject any or all of such supplemental unit prices which it deems to be excessive or unreasonable.

17. Withdrawal of Proposals

Any bidder may withdraw his proposal at any time prior to the scheduled closing time for the receipt of proposals, but no proposal may be withdrawn after the scheduled closing time for the receipt of proposals within the period of time stated in the Advertisement for Bids.

18. Signing of Proposal

(a) Proposals which are not signed by individuals making them should have attached thereto a power of attorney evidencing authority to sign the proposal in the name of the person to whom it is signed.

(b) Proposals which are signed for a co-partnership should be signed by all of the co-partners or by an attorney-in-fact. If signed by an attorney-in-fact, there should be attached to the proposal a power of attorney, evidencing authority to sign the proposal.

(c) Proposals which are signed for a corporation should have the correct corporate name thereof signed in handwriting or in typewriting, and the signature of the president or other authorized officer of the corporation should be manually written below the written or typewritten corporate name following the word "BY _____".

(d) For any legal entity, the authority of the person signing for such legal entity shall be attached to the Proposal.

19. Definition of Award

The contract shall be deemed to have been awarded when formal notice of award has been duly served upon an intended awardee (i.e., the bidder to whom the Owner contemplated awarding a contract) by some officer or agent whom the Owner duly authorized to give such notice.

20. Execution of Contracts and Bonds

Each contract must be executed in three (3) original counterparts and no more, and there shall be executed original counterparts of the Contractor's Performance Bond (and Labor and Materials Bond, if required) in equal number to the executed original counterpart of the Contract. One copy of such executed documents will be retained by the owner, the other two will be delivered to the Contractor. The successful Contractor must provide compensation insurance and public liability as outlined in the General Conditions of the Contract. The costs of executing the bonds and contract insurance, including all notarial fees and expenses are to be paid by the Contractor to whom the contract is awarded.

21. Commencement and Completion of Work

Upon award of a Contract, the Owner shall determine the date on which the Contractor shall commence work. This date will not be prior to the time stated in the Proposal Form. Attention to all bidders is also directed to the number of calendar days, or date, stated in the Proposal Form for completion of the work to the point of final acceptance by the Owner.

22. Make-up of Contract Document

The attention of bidders is directed to the make-up of this Contract Document. The specifications governing work to be performed on this project and included in this document are composed of two parts: Project Specifications and General Specifications.

The General Specifications define and describe the major construction materials and construction methods for this project.

Materials and construction methods defined and described in the Project Specifications shall govern in cases of any variances between the General Specifications and Project Specifications. Whenever more than one construction material and/or construction method is defined and described in the General Specifications, the particular material and/or method to be used on this project shall be the one stated in the Project Specifications.

The General Specifications and the Project Specifications together with the Contract Drawings and Proposal Forms, define and describe the work to be performed on this Project.

23. Payment

Contractors will be paid at intervals stated in the Contract.

24. Guarantee

The attention of all bidders is directed to the conditions that on any contract which includes equipment items, the Contractor and his Surety will be held responsible by the Owner, that all items of equipment purchased and installed under this Contract fully meet the type, quality, design and the performance guarantee defined in the Major Equipment and Project Specifications, and in actual operation actually perform the functions for which installed. Further, that the Owner may withhold final payment until such performance and operation are demonstrated.

In view of such a contract requirement, it is suggested that the successful Contractor purchase all items of equipment under adequate guarantees or bonds from the manufacturers to protect the obligation of the Contractor to the owner on items of equipment.

25. Award of Contract

A. The Contract shall be awarded to the lowest responsive, reasonable bidder(s) including responsive efforts to utilize small and minority owned businesses.

B. In case of error in the extension of prices, the unit bid prices shall govern. The Owner reserves the right to waive any informality in bids at his discretion.

26. Performance and Payment Bond:

A bid may be rejected if a bidder fails to meet any one of the following requirements:

1. The successful respondent shall supply, no later than five (5) business days after award of contract a Payment and Performance Bond in the amount of 100% of the total bid price,

issued by an insurance company licensed by the Wisconsin Department of Insurance, covering the faithful performance of this contract, in all terms and conditions thereof throughout the full term thereof between the County and the respondent and which will further indemnify and save harmless the County from all cost and damages by reason of the respondent's default, breach or failure to satisfactorily complete any of the following terms. If certificate is not submitted within five (5) business days, Kenosha County, at its sole discretion, may void the contract and award to the next low, responsive and responsible bidder.

2. Payment to all entities, individuals, and the like furnishing labor or materials in connection with this contract: and

3. Successful, full and satisfactory completion, including the dates specified between the County and the vendor, of the installation, ongoing operation and performance, consumable supplies and maintenance herein concerned. In the event of any breach on the part if the vendor, the Surety and/or the County shall have the right to take possession, custody, and control of any work site and/or installation and to complete and operate same forthwith, with any cost attributed thereto borne the respondent or the Surety. In the event of control and operation of any site(s) by the County or Surety, the County shall incur no financial obligation to the Respondent, and shall recover from the Respondent or Surety and cost of cover, i.e. additional cost, if any, incurred by the County in operating any site(s) during the breach by the respondent.

27. Change Orders:

County shall have the right at any time during the progress of the Work to increase or decrease the Work. Promptly after being notified of a change, Contractor shall submit an itemized estimate of any cost or time increases or decreases it foresees as a result of the change. Except in an emergency endangering life or property, no addition or changes to the Work shall be made except upon written order of County, and County shall not be liable to the Contractor for any increased compensation without such written order. No officer, employee or agent of the County is authorized to direct any extra or changed work orally.

A Change Order, in a format acceptable to both the County and the Contractor, shall be issued and executed promptly after an agreement is reached between Contractor and the County concerning the requested changes. All change orders shall be incorporated into the contract. Contractor shall promptly perform changes authorized by duly executed Change Orders. The Contract Amount and Contract Time shall be adjusted in the Change Order in the manner as County and Contractor shall mutually agree.

KENOSHA COUNTY DPW
ROAD IMPROVEMENT PROJECT
RD 16-003

IN: CTH S
AT: AMAZON WEST DRIVEWAY TO CTH H

KENOSHA COUNTY
WISCONSIN

May 2020

P R O P O S A L

TO: Kenosha County Department of Public Works
19600 75th Street, Suite 122-1
Bristol, WI 53104-9772

The undersigned having become familiar with the local conditions effecting the cost of the work and with the Contract Documents including the Form of Proposal, Form of Contract, Plans, Drawings, Specifications, and Addenda and Exhibits issued and attached to the Official Contract Document on file in the office of the Kenosha County Director of Public Works, hereby proposes to perform everything required to be performed and to provide and furnish all of the labor, materials, necessary tools, equipment, expendable and otherwise and all utility and transportation services necessary to perform and complete in a workmanlike manner all of the work required for and the work described in the following Bidding Schedule, complete in place and ready for use in connection with the CTH S Road Improvement Project, Amazon West Driveway to CTH H, in Kenosha County all in accordance with the following listed Contract Drawings and specifications as prepared by the Kenosha County Department of Public Works and R. A. Smith, Inc., Consulting Engineers, including Addenda Nos. ___, ___, ___, and ___, issued thereto for the sums set forth in the following Bidding Schedule.

SAMPLE

KENOSHA COUNTY DPW
ROAD IMPROVEMENT PROJECT
RD 16-003

IN: CTH S
AT: AMAZON WEST DRIVEWAY TO CTH H

KENOSHA COUNTY
WISCONSIN

May 2020

Order of Sheets - Plan Set

Section No.	Description
1	Title
2	General Notes and Details
3	Miscellaneous Quantities
4	Plats of Right of Way
5	Plan & Profile
7	Special Sign Details
8	Structure Plans; B-30-149
9	Earthwork Data and Cross-sections

SAMPLE

KENOSHA COUNTY DPW
ROAD IMPROVEMENT PROJECT
RD 16-003

IN: CTH S
AT: AMAZON WEST DRIVEWAY TO CTH H

KENOSHA COUNTY
WISCONSIN

May 2020

I. BIDDING SCHEDULE

Item No.	Description	Qty	Unit	Unit Price	Total
201.0105	Clearing	58	STA		
201.0120	Clearing	44	ID		
201.0205	Grubbing	58	STA		
201.0220	Grubbing	44	ID		
203.0100	Removing Small Pipe Culverts	43	EACH		
203.0200	Removing Old Structure 41+68	1	LS		
204.0100	Removing Pavement	31,052	SY		
204.0115	Removing Asphaltic Surface Butt Joints	48	SY		
204.0150	Removing Curb & Gutter	2,698	LF		
204.0155	Removing Concrete Sidewalk	141	SY		
204.0170	Removing Fence	1,524	LF		
204.0220	Removing Inlets	18	EACH		
204.0245.06	Removing Storm Sewer 6-Inch	69	LF		
204.0245.08	Removing Storm Sewer 8-Inch	61	LF		
204.0245.10	Removing Storm Sewer 10-Inch	32	LF		
204.0245.12	Removing Storm Sewer 12-Inch	112	LF		
204.0245.18	Removing Storm Sewer 18-Inch	32	LF		

SAMPLE

Item No.	Description	Qty	Unit	Unit Price	Total
204.0245.33	Removing Storm Sewer 33X49-Inch	482	LF		
205.0100	Excavation Common	92,236	CY		
206.1000	Excavation For Structures Bridges B-30-149	1	LS		
210.1500	Backfill Structure Type A	413	TON		
305.0110	Base Aggregate Dense 3/4-Inch	1,553	TON		
305.0120	Base Aggregate Dense 1 1/4-Inch	85,875	TON		
310.0110	Base Aggregate Open-Graded	1,019	TON		
311.0110	Breaker Run	84,007	TON		
415.0410	Concrete Pavement Approach Slab	3,646	SY		
416.0160	Concrete Driveway 6-Inch	649	SY		
416.0610	Drilled Tie Bars	20	EACH		
455.0605	Tack Coat	12,319	GAL		
460.5223	HMA Pavement 3 LT 58-28 S	1,971	TON		
460.5224	HMA Pavement 4 LT 58-28 S	1,314	TON		
460.6223	HMA Pavement 3 MT 58-28 S	21,422	TON		
460.6224	HMA Pavement 4 MT 58-28 S	8,569	TON		
465.0105	Asphaltic Surface	1,704	TON		
465.0120	Asphaltic Surface Driveways And Field Entrances	295	TON		
465.0125	Asphaltic Surface Temporary	135	TON		
465.0315	Asphaltic Flumes	146	SY		
502.0100	Concrete Masonry Bridges	521	CY		
502.3200	Protective Surface Treatment	605	SY		
502.3210	Pigmented Surface Sealer	153	SY		
502.4206	Adhesive Anchors No. 6 Bar	24	EACH		
505.0400	Bar Steel Reinforcement HS Structures	9,630	LB		
505.0600	Bar Steel Reinforcement HS Coated Structures	75,080	LB		

SAMPLE

Item No.	Description	Qty	Unit	Unit Price	Total
505.0800.S	Bar Steel Reinforcement HS Stainless Structures	590	LB		
511.1200	Temporary Shoring B-30-149	306	SF		
516.0500	Rubberized Membrane Waterproofing	30	SY		
521.1012	Apron Endwalls For Culvert Pipe Steel 12-Inch	14	EACH		
521.1015	Apron Endwalls For Culvert Pipe Steel 15-Inch	4	EACH		
521.1018	Apron Endwalls For Culvert Pipe Steel 18-Inch	12	EACH		
521.1024	Apron Endwalls For Culvert Pipe Steel 24-Inch	2	EACH		
521.1030	Apron Endwalls For Culvert Pipe Steel 30-Inch	2	EACH		
521.1242	Apron Endwalls For Pipe Arch Steel 42X29-Inch	2	EACH		
521.3112	Culvert Pipe Corrugated Steel 12-Inch	283	LF		
521.3115	Culvert Pipe Corrugated Steel 15-Inch	57	LF		
521.3118	Culvert Pipe Corrugated Steel 18-Inch	246	LF		
521.3124	Culvert Pipe Corrugated Steel 24-Inch	59	LF		
521.3130	Culvert Pipe Corrugated Steel 30-Inch	56	LF		
521.3742	Pipe Arch Corrugated Steel 42X29-Inch	22	LF		
522.0115	Culvert Pipe Reinforced Concrete Class III 15-Inch	54	LF		
522.0418	Culvert Pipe Reinforced Concrete Class IV 18-Inch	125	LF		
522.0430	Culvert Pipe Reinforced Concrete Class IV 30-Inch	56	LF		
522.1012	Apron Endwalls For Culvert Pipe Reinforced Concrete 12-Inch	20	EACH		
522.1015	Apron Endwalls For Culvert Pipe Reinforced Concrete 15-Inch	18	EACH		
522.1018	Apron Endwalls For Culvert Pipe Reinforced Concrete 18-Inch	6	EACH		
522.1021	Apron Endwalls For Culvert Pipe Reinforced Concrete 21-Inch	2	EACH		
522.1024	Apron Endwalls For Culvert Pipe Reinforced Concrete 24-Inch	3	EACH		
522.1030	Apron Endwalls For Culvert Pipe Reinforced Concrete 30-Inch	3	EACH		
522.2424	Culvert Pipe Reinforced Concrete Horizontal Elliptical Class HE-IV 24X38-Inch	409	LF		

SAMPLE

Item No.	Description	Qty	Unit	Unit Price	Total
522.2429	Culvert Pipe Reinforced Concrete Horizontal Elliptical Class HE-IV 29X45-Inch	303	LF		
522.2624	Apron Endwalls For Culvert Pipe Reinforced Concrete Horizontal Elliptical 24X38-Inch	14	EACH		
522.2629	Apron Endwalls For Culvert Pipe Reinforced Concrete Horizontal Elliptical 29X45-Inch	4	EACH		
522.2643	Apron Endwalls For Culvert Pipe Reinforced Concrete Horizontal Elliptical 43X68-Inch	2	EACH		
550.1100	Piling Steel HP 10-Inch X 42 LB	1,485	LF		
601.0411	Concrete Curb & Gutter 30-Inch Type D	146	LF		
601.0557	Concrete Curb & Gutter 6-Inch Sloped 36-Inch Type D	25,837	LF		
601.0588	Concrete Curb & Gutter 4-Inch Sloped 36-Inch Type TBT	100	LF		
602.0410	Concrete Sidewalk 5-Inch	12,027	SF		
602.0605	Curb Ramp Detectable Warning Field Radial Yellow	135	EACH		
606.0200	Riprap Medium	50	CY		
606.0300	Riprap Heavy	136	CY		
608.0315	Storm Sewer Pipe Reinforced Concrete Class III 15-Inch	269.5	LF		
608.0412	Storm Sewer Pipe Reinforced Concrete Class IV 12-Inch	2,510.7	LF		
608.0415	Storm Sewer Pipe Reinforced Concrete Class IV 15-Inch	898.5	LF		
608.0418	Storm Sewer Pipe Reinforced Concrete Class IV 18-Inch	156.2	LF		
608.0421	Storm Sewer Pipe Reinforced Concrete Class IV 21-Inch	246.3	LF		
608.0424	Storm Sewer Pipe Reinforced Concrete Class IV 24-Inch	196.4	LF		
608.0430	Storm Sewer Pipe Reinforced Concrete Class IV 30-Inch	42.0	LF		
608.2343	Storm Sewer Pipe Reinforced Concrete Horizontal Elliptical Class HE-III 43X68-Inch	198.9	LF		
608.2424	Storm Sewer Pipe Reinforced Concrete Horizontal Elliptical Class HE-IV 24X38-Inch	407.0	LF		
611.0530	Manhole Covers Type J	7	EACH		
611.0545	Manhole Covers Type L	1	EACH		
611.0624	Inlet Covers Type H	2	EACH		

SAMPLE

Item No.	Description	Qty	Unit	Unit Price	Total
611.0627	Inlet Covers Type HM	113	EACH		
611.0645	Inlet Covers Type MS-A	27	EACH		
611.1004	Catch Basins 4-Ft Diameter	3	EACH		
611.1005	Catch Basins 5-Ft Diameter	2	EACH		
611.1230	Catch Basins 2X3-FT	21	EACH		
611.2004	Manholes 4-Ft Diameter	5	EACH		
611.2005	Manholes 5-Ft Diameter	3	EACH		
611.2006	Manholes 6-Ft Diameter	1	EACH		
611.2008	Manholes 8-Ft Diameter	1	EACH		
611.3004	Inlets 4-Ft Diameter	10	EACH		
611.3230	Inlets 2X3-FT	76	EACH		
611.3901	Inlets Median 1 Grate	1	EACH		
611.3902	Inlets Median 2 Grate	3	EACH		
611.8110	Adjusting Manhole Covers	11	EACH		
611.8115	Adjusting Inlet Covers	2	EACH		
611.8120.S	Cover Plates Temporary	10	EACH		
611.9800.S	Pipe Grates	4	EACH		
612.0206	Pipe Underdrain Unperforated 6-Inch	2,689	LF		
612.0406	Pipe Underdrain Wrapped 6-Inch	5,560	LF		
612.0700	Drain Tile Exploration	10,000	LF		
612.0806	Apron Endwalls For Underdrain Reinforced Concrete 6-Inch	22	EACH		
614.0150	Anchor Assemblies For Steel Plate Beam Guard	2	EACH		
614.0920	Salvaged Rail	315	LF		
614.0925	Salvaged Guardrail End Treatments	4	EACH		
614.2300	MGS Guardrail 3	425	LF		
614.2500	MGS Thrie Beam Transition	236	LF		

SAMPLE

Item No.	Description	Qty	Unit	Unit Price	Total
614.2610	MGS Guardrail Terminal EAT	6	EACH		
616.0206	Fence Chain Link 6-FT	86	LF		
619.1000	Mobilization	1	EACH		
620.0300	Concrete Median Sloped Nose	677	SF		
624.0100	Water	6,353	MGAL		
625.0500	Salvaged Topsoil	98,985	SY		
627.0200	Mulching	26,165	SY		
628.1504	Silt Fence	3,063	LF		
628.1520	Silt Fence Maintenance	19,575	LF		
628.1905	Mobilizations Erosion Control	15	EACH		
628.1910	Mobilizations Emergency Erosion Control	10	EACH		
628.2004	Erosion Mat Class I Type B	34,547	SY		
628.2027	Erosion Mat Class II Type C	5,495	SY		
628.6005	Turbidity Barriers	500	SY		
628.7005	Inlet Protection Type A	181	EACH		
628.7010	Inlet Protection Type B	24	EACH		
628.7015	Inlet Protection Type C	107	EACH		
628.7020	Inlet Protection Type D	59	EACH		
628.7504	Temporary Ditch Checks	591	LF		
628.7515.S	Stone Or Rock Ditch Checks	50	EACH		
628.7555	Culvert Pipe Checks	50	EACH		
628.7560	Tracking Pads	174	EACH		
628.7570	Rock Bags	20	EACH		
629.0210	Fertilizer Type B	65.6	CWT		
630.0110	Seeding Mixture No. 10	600	LB		
630.0130	Seeding Mixture No. 30	475	LB		

SAMPLE

Item No.	Description	Qty	Unit	Unit Price	Total
630.0175	Seeding Mixture No. 75	42	LB		
630.0200	Seeding Temporary	1,383	LB		
630.0300	Seeding Borrow Pit	300	LB		
630.0500	Seed Water	2,260	MGAL		
631.0300	Sod Water	434	MGAL		
631.1000	Sod Lawn	19,215	SY		
633.5200	Markers Culvert End	72	EACH		
634.0612	Posts Wood 4X6-Inch X 12-FT	8	EACH		
634.0614	Posts Wood 4X6-Inch X 14-FT	20	EACH		
634.0616	Posts Wood 4X6-Inch X 16-FT	80	EACH		
634.0618	Posts Wood 4X6-Inch X 18-FT	4	EACH		
637.2210	Signs Type II Reflective H	760.00	SF		
637.2220	Signs Type II Reflective SH	6.75	SF		
637.2230	Signs Type II Reflective F	184.50	SF		
638.2102	Moving Signs Type II	7	EACH		
638.2602	Removing Signs Type II	38	EACH		
638.3000	Removing Small Sign Supports	45	EACH		
643.0300	Traffic Control Drums	29,835	DAYS		
643.0420	Traffic Control Barricades Type III	4,725	DAYS		
643.0500	Traffic Control Flexible Tubular Marker Posts	223	EACH		
643.0600	Traffic Control Flexible Tubular Marker Bases	223	EACH		
643.0705	Traffic Control Warning Lights Type A	9,290	DAYS		
643.0900	Traffic Control Signs	43,448	DAYS		
643.0920	Traffic Control Covering Signs Type II	4	EACH		
643.1000	Traffic Control Signs Fixed Message	107	SF		
643.1050	Traffic Control Signs PCMS	178	DAY		

SAMPLE

Item No.	Description	Qty	Unit	Unit Price	Total
643.5000	Traffic Control	1	EACH		
645.0111	Geotextile Type DF Schedule A	120	SY		
645.0120	Geotextile Type HR	256	SY		
646.1020	Marking Line Epoxy 4-Inch	41,351	LF		
646.3020	Marking Line Epoxy 8-Inch	2,820	LF		
646.5020	Marking Arrow Epoxy	27	EACH		
646.5120	Marking Word Epoxy	8	EACH		
646.6120	Marking Stop Line Epoxy 18-Inch	161	LF		
646.7120	Marking Diagonal Epoxy 12-Inch	134	LF		
646.7420	Marking Crosswalk Epoxy Transverse Line 6-Inch	321	LF		
646.8120	Marking Curb Epoxy	400	LF		
646.8220	Marking Island Nose Epoxy	10	EACH		
646.9000	Marking Removal Line 4-Inch	1,306	LF		
646.9010	Marking Removal Line Water Blasting 4-Inch	68	LF		
646.9100	Marking Removal Line 8-Inch	208	LF		
646.9110	Marking Removal Line Water Blasting 8-Inch	68	LF		
646.9200	Marking Removal Line Wide	252	LF		
646.9300	Marking Removal Special Marking	3	EACH		
646.9310	Marking Removal Special Marking Water Blasting	3	EACH		
649.0105	Temporary Marking Line Paint 4-Inch	42,768	LF		
649.0150	Temporary Marking Line Removable Tape 4-Inch	11,739	LF		
649.0250	Temporary Marking Line Removable Tape 8-Inch	436	LF		
649.0550	Temporary Marking Arrow Removable Tape	7	EACH		
649.0650	Temporary Marking Word Removable Tape	3	EACH		
649.0805	Temporary Marking Stop Line Paint 18-Inch	48	LF		
649.0850	Temporary Marking Stop Line Removable Tape 18-Inch	67	LF		

SAMPLE

Item No.	Description	Qty	Unit	Unit Price	Total
649.0960	Temporary Marking Removable Mask Out Tape 6-Inch	947	LF		
649.0970	Temporary Marking Removable Mask Out Tape 10-Inch	189	LF		
650.4000	Construction Staking Storm Sewer	146	EACH		
650.4500	Construction Staking Subgrade	17,150	LF		
650.5000	Construction Staking Base	18,240	LF		
650.5500	Construction Staking Curb Gutter And Curb & Gutter	26,083	LF		
650.6000	Construction Staking Pipe Culverts	9	EACH		
650.9000	Construction Staking Curb Ramps	6	EACH		
650.9910	Construction Staking Supplemental Control RD16-003	1	LS		
650.9920	Construction Staking Slope Stakes	18,240	LF		
690.0150	Sawing Asphalt	405	LF		
690.0250	Sawing Concrete	365	LF		
SPV.0060.01	Catch Basins Median 1 Grate	20	EACH		
SPV.0060.02	Field Office	1	EACH		
SPV.0060.03	Drain Tile Connection	20	EACH		
SPV.0060.04	Utility Line Opening	10	EACH		
SPV.0090.01	Silt Fence Heavy Duty	112	LF		
SPV.0090.02	Asphaltic Curb Temporary	500	LF		
SPV.0170.01	Proof Rolling	88	STA		
SPV.0180.01	Stormwater Treatment Filter Strips	5,067	SY		
SPV.0195.01	Select Crushed Material For Travel Corridor	32	TON		
				Base Bid Total:	

NOTE: Kenosha County reserves the right to select or reject the Base Bid in the best interest of the County.

SAMPLE

II. PROPOSAL CONDITIONS:

(1) TOTAL BASE BID:

It is expressly understood and agreed that the foregoing Total Base Bid is the basis for establishing the comparison of bids only and is not to be construed to be a lump sum proposal.

It is further understood that the quantities in the Bidding Schedule for the unit price items are approximate only, and that payment on a Contract will be made only on the actual quantities of work completed in place, measured on the basis defined in the General Conditions.

The undersigned has carefully checked the above Bidding Schedule against the Contract Drawings and Specifications before preparing this Proposal and accepts said quantities as substantially correct, both as to classification and amount, and as correctly listing the complete work to be done in accordance with the Plans and Specifications.

(2) BID SECURITY:

Accompanying this Proposal is a (Certified Check) (Bank Draft) (Bid Bond) in the amount of _____DOLLARS ($_____) payable to (which protects) the Owner, and which it is agreed, will be retained by the Owner as liquidated damages if the undersigned fails to execute the Contract in conformance with the FORMS OF CONTRACT incorporated in the Contract Documents, and furnish a Performance Bond as specified within ten (10) days from the notification of the award of the Contract to the undersigned.

In submitting this Proposal, it is understood and agreed by the undersigned, that the right is reserved by the Owner to reject any or all Proposals. It is further understood and agreed that this Proposal may not be withdrawn for a period of sixty (60) days from the opening thereof.

(3) STARTING AND COMPLETION:

A. Kenosha County anticipates awarding this Contract on or after June 5, 2020.

B. Kenosha County anticipates issuing a formal notice to proceed after June 19, 2020.

C. Upon receipt of written Notice to Proceed the Contractor shall complete all work under the Contract prior to November 1, 2021.

The undersigned further agrees that should he/she fail to complete the above described work under above Item C within the limits stated above, liquidated damages in the sum of Twenty Five Hundred Dollars ($2,500.00) for each calendar day the work remains uncompleted beyond said completion date will be paid by the Contractor to Kenosha County as stated in the Contract Form.

SAMPLE

(4) SUBCONTRACTOR LISTING:

The undersigned proposes to employ the following listed subcontractors for the following enumerated classes of work and not to alter or add to such list without the written consent of the Owner. All project subcontractors must be listed as a condition of this proposal.

	CLASS OF WORK	SUBCONTRACTOR
1.	_____	_____
2.	_____	_____
3.	_____	_____
4.	_____	_____
5.	_____	_____
6.	_____	_____

SAMPLE

DATE: _____

_____
(Name of Firm)

_____
(Address)

_____
(City, State and Zip Code)

By _____
(Title)

By _____
(Title)

By _____
(Title)

ADDENDUM RECEIPT:

We acknowledge receipt of Addenda Nos. _____, _____, _____, _____, inclusive.

SAMPLE

AFFIDAVIT OF ORGANIZATION AND AUTHORITY

STATE OF WISCONSIN)
) SS
COUNTY OF)

_____, being first duly sworn on oath deposes and says that the bidder on the attached Bid Proposal is organized as indicated below and that statements herein made are made on behalf of such bidder and that this deponent is authorized to make them.

(Fill out applicable paragraph)

1. CORPORATION:

The bidder is a corporation organized and existing under the laws of the State of _____and its president is _____, its secretary is _____ and it does have a corporate seal. The President is authorized to sign construction contracts and bids for the company by action of its Board of Directors taken _____ a certified copy of which is hereto attached. (Strike out this last sentence if not applicable).

2. PARTNERSHIP:

The bidder is a partnership consisting of _____ and _____, partners doing business under the name of _____.

3. SOLE TRADER:

The bidder is an individual and is operating under a trade name; such trade name is as follows: _____.

4. ADDRESS:

The business address of the bidder is as follows:

_____, Phone No._____

SAMPLE

DRUG FREE WORKPLACE CERTIFICATION

The undersigned contractor/vendor hereby certifies that it will provide a drug-free workplace program by:
(1)Publishing a statement notifying its employees that the unlawful manufacture, distribution, dispensing, possession, or use of a controlled substance is prohibited in the offeror's workplace, and specifying the actions that will be taken against employees for violations of such prohibition;
(2) Establishing a continuing drug-free awareness program to inform its employees about:

(i) The dangers of drug abuse in the workplace;
(ii) The offeror's policy of maintaining a drug-free workplace;
(iii) Any available drug counseling, rehabilitation, and employee assistance programs; and
(iv) The penalties that may be imposed upon employees for drug abuse violations occurring in the workplace;

(3) Giving all employees engaged in performance of the contract a copy of the statement required by subparagraph (1);
(4)Notifying all employees, in writing, of the statement required by subparagraph (1), that as a condition of employment on a covered contract, the employee shall:

(i) Abide by the terms of the statement; and
(ii) Notify the employer in writing of the employee's conviction of, or plea of guilty or nolo contendere to, any violation of Wisconsin ACT 181and Wisconsin State Statute 103.503 or of any controlled substance law of the United States or of any state, for a violation occurring in the workplace NO later than five days after such conviction.

(5) Notifying Kenosha County government in writing within 10 calendar days after receiving notice under subdivision (4) (ii) above, from an employee or otherwise receiving actual notice of such conviction. The notice shall include the position title of the employee; (6) Within 30 calendar days after receiving notice under subparagraph (4) of a conviction, taking one of the following actions with respect to an employee who is convicted of a drug abuse violation occurring in the workplace:

(i) Taking appropriate personnel action against such employee, up to and including termination; or
(ii) Requiring such employee to participate satisfactorily in a drug abuse assistance or rehabilitation program approved for such purposes by a federal, state, or local health, law enforcement, or other appropriate agency; and

(7) Making a good faith effort to maintain a drug-free workplace program through implementation of subparagraphs (1) through (6).

_____
(Contractor/Vendor Signature)

_____
(Print Contractor/Vendor Name)

SAMPLE

STATE OF _____

COUNTY OF _____

The foregoing instrument was acknowledged before me this _____day of _____, 20____,

by_____
(Name of Signatory)

as _____of_____
(Title) (Name of Corporation/Company)

known to me to be the person described herein, or who produced_____
(Type of Identification)

as identification, and who did/did not take an oath.

NOTARY PUBLIC:

_____
(Signature)

_____
(Print Name)

My commission expires: _____

SAMPLE

SWORN STATEMENT OF BIDDER

AS REQUIRED BY

SECTION 66.29(7) WISCONSIN STATUTES

I, being first duly sworn at _____, _____,
(City) (State)
on oath on behalf of said bidder, that I have examined and carefully prepared this Proposal Form from the plans, specifications and the other Contract Documents and have checked the same in detail before submitting this Proposal; and this sworn statement is hereby made a part of the foregoing Proposal.

_____
Signature

_____
(Title, if any)

_____
(Address)

_____
(Phone No. of Bidder)

Subscribed and sworn to before me

this _____ day _____, 20____.

_____
Notary Public

_____ County

State of _____

My Commission Expires _____

SAMPLE

KENOSHA COUNTY DPW
ROAD IMPROVEMENT PROJECT
RD 16-003

IN: CTH S
AT: AMAZON WEST DRIVEWAY TO CTH H

KENOSHA COUNTY
WISCONSIN

May 2020

1. COMPONENT PARTS OF THE CONTRACT

Each Contract consists of the following component parts, all of which are as fully a part of this Contract as if herein set out verbatim, or, if not attached, as if attached hereto.

(a) Contract Form

(b) Addenda Nos. ____, ____, ____, and ____

(c) Special Provisions

(d) General Conditions

(e) Project Specifications

(f) General Specifications

(g) Contract Drawings (Plans)

(h) Instructions to Bidders

(i) Advertisement for Bids

(j) Contractor's Proposal

In the event that any provision in any of the above component parts of the Contract conflicts with any provision in any other of the component parts, the provision in the component part first listed above, shall govern over any other component part which follows it alphabetically, except as may be otherwise specifically stated.

2. INDEMNITY AND INSURANCE REQUIREMENTS:

The project Contractor must carry adequate insurance in accordance with the following Kenosha County insurance requirements:

a) **Contractor** agrees to indemnify, hold harmless and defend **Kenosha County**, its officers, agents and employees from any and all liability including claims, demands, losses, costs, damages and expenses of every kind (including financial or consequential damages) and description or damage to persons or property arising out of or in connection with or occurring during the course of this agreement where such liability is founded upon or occurring out of the acts or omissions of the **Contractor,** its agents or employees.

b) **Contractor** agrees to protect itself and **Kenosha County** under the indemnity agreement set forth in the above paragraph. **Contractor** will at all times during the terms of this Contract keep in force and effect commercial general liability, contractor's environmental (pollution) liability or project specific sudden and accidental pollution coverage included under the commercial general liability policy, automobile liability, excess/umbrella liability, worker's compensation, and employer's liability insurance policies issued by a company or companies rated A- VII or better by AM Best and authorized to do business in the State of Wisconsin with the following minimum limits of coverage;

c) Commercial General Liability*

i.	Each Occurrence	$1,000,000
ii.	General Aggregate	$2,000,000
iii.	Products - Comp/Op Agg	$2,000,000

d) Contractor's Environmental (Pollution) Liability
(legal liability for pollution conditions due to your operations)

i.	Each Incident	$1,000,000
ii.	Aggregate	$1,000,000

In lieu of a separate environmental policy, project specific Sudden and Accidental Pollution coverage included under your commercial general liability policy that does not
erode the GL and aggregate limits is acceptable.

e) Automobile Liability

i.	Combined Single Limit	$1,000,000

f) Excess/Umbrella Liability

i.	Each Occurrence	$1,000,000
ii.	Aggregate	$1,000,000

g) Worker's Compensation Statutory Limits

h) Employer's Liability*

i.	Each Accident	$100,000
ii.	Disease Each Employee	$100,000
iii.	Disease Policy Limit	$500,000

*Or such higher limits sufficient for these insurance policies to be scheduled under the Umbrella policy.

i) Coverage afforded shall apply as a primary with **Kenosha County** named as an additional insured on the commercial general and excess/umbrella liability policies. **Contractor** shall give 30days advance written notice of cancellation or non-renewal during the term of this Contract.

j) The hold harmless, indemnity and insurance provisions of this contract shall survive the termination of this contract and shall remain operative until the time that all potential claims or potential civil actions by the parties or by third parties shall expire under existing law.

k) If any policies are written on a claims-made basis, **Contractor** shall not discontinue or change liability insurance policies in effect during any part of this contract without buying an extended reporting period to cover potential claims that may have occurred during the term of this agreement.

l) Upon execution of this Contract, the **Contractor** shall furnish **Kenosha County** with a certificate of insurance, showing evidence of the above requirements.

m) **Contractor** shall notify **Kenosha County** immediately upon the commencement of any litigation against **Contractor** where there is any possibility **Kenosha County** may be made a party thereto.

3. GENERAL

Perform the work under this construction contract for Kenosha County project RD 16-003, CTH S, Amazon West Driveway to CTH H in Kenosha County, Wisconsin as the plans show and execute the work as specified in the State of Wisconsin, Department of Transportation (WisDOT) Standard Specifications for Highway and Structure Construction, 2020 Edition, as published by WisDOT, and these special provisions.

4. SCOPE OF WORK

The work under this contract shall consist of excavation common, base aggregate dense, concrete curb and gutter, asphalt paving, storm sewer, pavement marking, permanent signing, traffic control, a bridge structure, erosion control, restoration, and all incidental items necessary to complete the work as shown on the plans and included in the proposal and contract.

5. PROSECUTION AND PROGRESS

Begin work within ten calendar days after the engineer issues a written notice to do so.

Provide the start date to the engineer in writing within a month after executing the contract but at least 14 calendar days before the preconstruction conference. Upon approval, the engineer will issue the notice to proceed within ten calendar days before the approved start date.

To revise the start date, submit a written request to the engineer at least two weeks before the intended start date. The engineer will approve or deny that request based on the conditions cited in the request and its effect on the owner's scheduled resources.

When, in the fall of 2020, after the new westbound travel lanes are substantially completed and as approved by the engineer to allow for opening the new CTH S westbound roadway to westbound traffic, and weather conditions or seasonal restrictions preclude the satisfactory performance of further work under this contract, the engineer will, in writing, suspend operations until the spring of 2021. Resume construction operations in the spring of 2021 within ten days after the date on which a written order to do so has been issued by the engineer. The contractor may be allowed to continue work through the winter only with prior approval in writing from Kenosha County and the engineer. Any request made to continue work through the winter must include provisions for ongoing erosion control, maintaining traffic, emergency vehicle access, and Kenosha County maintenance operations (predominantly snow plows).

6. TRAFFIC

Complete all work in accordance with the requirements of section 643 of the standard specifications, as detailed in the traffic control plans, and as herein described. All variations from the traffic control plans shall be approved in writing at least 48 hours prior to any traffic control change. Notify the engineer at least 48 hours prior to any traffic control changes.

Maintain emergency access at all times along CTH S and all side roads throughout the project. Maintain access to all properties within the project limits at all times. Methods and materials utilized to maintain access to properties are incidental to the project.

No operations shall proceed until all traffic control devices for such work are in the proper location.

Close CTH S to through traffic from the beginning of the project to the west side of 38th Street. Detour CTH S traffic as shown on the plans.

Construct CTH S from 38th Street (including the 38th Street intersection) to the end of the project in stages as described below. Keep CTH S, from 38th Street to the end of the project, open to one lane of traffic in each direction at all times, except for one 24-hour period sometime between 7:00 PM Friday and 6:00 AM Monday, to construct Stage 2A to reopen the CTH S intersection with 38th Street to one lane of traffic in each direction.

The adjacent WisDOT sponsored project (ID 3210-00-75, CTH S from CTH H to Brumback Boulevard) will install a temporary median cross-over just beyond this east project limits (Sta. 113+00'WB' to Sta. 116+00'WB') no later than August 29, 2020 to accommodate a switch in traffic pattern for Stage 2 construction.

Stage 1 – 38th Street to End Project

Maintain one lane of CTH S traffic in each direction on the existing roadway. Construct the north half of the finished roadway (the westbound roadway), including lane and shoulder final HMA pavement surface, shoulders, curb and gutter, storm sewer, shared-use path, and other incidental items.

Maintain traffic on the existing 96th Avenue roadway and construct the new 38th Street roadway from CTH S up to the existing 96th Avenue roadway. Do not close 96th Avenue (Stage 1B) until the new 38th Street connection to 96th Avenue is complete and open to traffic.

Coordinate traffic control switches with the adjacent WisDOT project ID 3210-00-75. Work performed west of Sta. 113+00'WB' is included under this contract.

Stage 2 – 38th Street to End Project

Shift both directions of CTH S traffic onto the new westbound lanes constructed under Stage 1 construction. Close the existing CTH S roadway to through traffic to construct the new eastbound finished roadway, including lane and shoulder final HMA pavement surface, shoulders, curb and gutter, storm sewer, and other incidental items.

Do not shift traffic until the crossover constructed under project ID 3210-00-75 is in place, which is required under that contract by August 29, 2020. Coordinate traffic control switches with the adjacent WisDOT project ID 3210-00-75.

Winter Shutdown – Entire Project Length

Maintain traffic along the entire project length during winter shutdown. Remove detour signs or cover detour signs during the winter shutdown. Covering or removal and reinstallation of detour signs is incidental to the contract.

Methods for opening the roadway to traffic will depend on the amount of work completed in 2020 during Stage 1:

Option 1 - Westbound roadway completed in 2020. Eastbound roadway east of 38th Street and other select locations as needed completed in 2020

Close the north lane of the existing CTH S roadway and close the south lane of the newly constructed CTH S westbound lanes to traffic. Maintain one lane of westbound traffic on the north lane of the newly constructed CTH S westbound lanes. Maintain one lane of eastbound traffic on the south lane of the existing CTH S roadway. Maintain traffic access across the median openings on temporary pavement. Maintain all traffic control devices and appurtenances during the winter shutdown in accordance with section 643 of the standard specifications. Maintenance of traffic control during the winter shutdown is incidental to the Traffic Control item.

Option 2 – Westbound roadway completed in 2020. No portion of eastbound roadway completed in 2020

Close the existing CTH S roadway and maintain two directions of traffic on the newly constructed CTH S westbound lanes for the entire length of the project. Coordinate traffic control at the east end of the project with the adjacent WisDOT project ID 3210-00-75 to utilize the cross-over constructed under that contract. Utilize the existing concrete pavement left in place in front of the Amazon Sortation facility near the west end of the project as a cross-over.

Stage 3

Close the inside lanes of traffic in both the eastbound and westbound directions and maintain one lane of traffic in each direction on the outside lanes of each of the eastbound and westbound roadways. Construct the remaining median curb and gutter, storm sewer, and other incidental items necessary to complete the project.

Night Work – Entire Project

Night work is allowed during non-peak hours from 7:00 PM until 6:00 AM Sunday evening through Friday morning with prior written authorization from the engineer. Close CTH S to through traffic during night work to construct culvert pipe and storm sewer pipes crossing the existing roadway. Place portable changeable message signs at least 3 days prior to the night

closure. Maintain emergency vehicle access through the entire construction zone during night work at all times. Do not close CTH S for night work more than 2 consecutive nights or for more than 5 nights in total under this contract.

7. UTILITIES

This contract does not come under the provision of Administrative Rule Trans 220.

There are known underground and overhead utility facilities located within the project limits. There are known utility adjustments required for this project. Coordinate construction activities with a call to Digger's Hotline or a direct call to the utilities that have facilities in the area as required per statues. Use caution to insure the integrity of underground and overhead facilities.

The following utilities have facilities within the project. Anticipated utility relocation work has begun and may be occurring simultaneously with the start of road construction operations. Contact each utility company listed in the plans prior to bidding to obtain confirmation on the status of utility relocation work within the project limits.

AT&T Wisconsin has underground and aerial fiber optic and copper cable throughout the project. Conflicts are currently being relocated are anticipated to be completed by July 31, 2020. Utility relocations may be occurring simultaneously with road construction operations.

Kenosha Water Utility has water and sanitary sewer lines south of CTH S and west of CTH H, which are outside the proposed project limits. Relocations are not anticipated.

Private Water System – 96th Avenue Residents own a private well water system that has water mains running north and south along both the east and west sides of 96th Avenue. No relocations are anticipated; however, these will not be marked by Digger's Hotline or the local community. Contact Bill Rock at 262-358-5575 or rockhouse4@yahoo.com to have these lines located.

Spectrum has underground and aerial facilities throughout the project. Conflicts are currently being relocated and are anticipated to be completed by July 31, 2020. Utility relocations may be occurring simultaneously with road construction operations.

WE Energies (Electric) has underground and aerial facilities throughout the project. Conflicts are currently being relocated are anticipated to be completed by July 31, 2020. Utility relocations may be occurring simultaneously with road construction operations. We Energies will install permanent street lighting at the CTH S intersection with 120th Avenue, 100th Avenue, and 38th Street only upon completion of the intersection. Notify WE Energies upon completion of road work at these side roads.

WE Energies (Gas) has underground facilities throughout the project that are anticipated to be in conflict with road construction. The majority of relocation work is planned to be completed prior to construction. As part of WE Energies' relocations, temporary gas main was installed around the homes waiting to be demolished near Sta. 10425'WB' LT and Sta. 105+25'WB' LT. WE Energies will relocate and discontinue in place this temporary gas main after these two houses have been demolished.

Coordinate construction activities with a call to Diggers Hotline or a direct call to the utilities for the underground facilities in the area, as required per state statutes. Use caution to maintain the integrity of utilities. Coordinate with the engineer to adjust plans as needed to avoid any unanticipated utility conflicts.

8. PAYMENT AND PERFORMANCE BOND - WAIVERS OF LIEN

The Contractor shall be required to furnish a Payment and Performance Bond, including labor and materials, in the amount of the total amount of the Contract. Said Bond shall name the Owner and be delivered to the Owner at the time of execution of the Contract. The Contractor shall be required to file waivers of lien from all suppliers, subcontractors, etc., with the Owner prior to receiving payment on the project.

9. EMERGENCY VEHICLE INGRESS & EGRESS

The Contractor shall conduct his operations in a manner, which does not restrict emergency vehicle access throughout the duration of the contract except as provided in the Traffic Control Specifications.

10. SCHEDULE OF CONSTRUCTION OPERATIONS

Prior to commencement of any work under this Contract, the Contractor shall confer with the Engineer and other representatives of the Owner and prepare a detailed schedule of construction operations. This schedule shall be subject to the approval of the Owner, and the Owner reserves the right to subsequently modify the schedule should he deem it necessary.

11. WORK BY OTHERS

The Kenosha County Department of Public Works utilizes the various project sites on a daily basis. The Contractor shall be aware that work by the Kenosha County Department of Public Works, and/or other Contractors may be going on during the Contract work and the Contractor is expected to cooperate with others.

The Wisconsin Department of Transportation (WisDOT) is reconstructing the CTH S roadway from the end of this project at CTH H to Brumback Boulevard under WisDOT Project ID 3210-00-75 in 2020 and 2021. Coordinate construction and traffic control operations on a weekly basis with the construction representatives for WisDOT Project ID 3210-00-75. Do not interfere with construction or traffic control operations of WisDOT Project ID 3210-00-75.

12. PERMITS

The Contractor shall be responsible for obtaining and paying for all necessary Federal, State, and Local permits, which may be required for contract operations.

KENOSHA COUNTY DPW
ROAD IMPROVEMENT PROJECT
RD 16-003

IN: CTH S
AT: AMAZON WEST DRIVEWAY TO CTH H

KENOSHA COUNTY
WISCONSIN

May 2020

C O N T R A C T

THIS CONTRACT made on the _____ day of _____, 20___ by and between _____, hereinafter called the "CONTRACTOR" and the County of Kenosha, Wisconsin, hereinafter called the "OWNER".

WITNESSETH, that the Contractor, and the Owner for the consideration stated herein agree as follows:

ARTICLE I. SCOPE OF WORK

The Contractor shall perform everything required to be performed and shall provide and furnish all the labor, materials, necessary tools, equipment, expendable and otherwise, and all utility and transportation services required to perform and complete in workmanlike manner all of the work required for the CTH S Road Improvement Project, from the Amazon West Driveway to CTH H, in Kenosha County all in strict accordance with the Contract Drawings and Specifications including any and all addenda prepared by the Kenosha County Department of Public Works and R. A. Smith, Inc., Consulting Engineers, which Contract Drawings and Specifications are made a part of the Contract, and in strict compliance with the Contractor's Proposal and the other sections of the Contract Documents shall do everything required by this contract and other documents constituting a part thereof.

ARTICLE II. THE CONTRACT PRICE

The Owner shall pay to the Contractor for the performance of this Contract, subject to any additions or deductions provided herein, in current funds, the contract price computed as follows:

The foregoing Total shall be the basis for establishing the amount of Payment and Performance Bond and is not to be construed to be a lump sum contract price. The foregoing quantities of the unit price items are approximate only, and it is understood and agreed that payment shall be made only on the actual quantities of work completed in place, measured on the basis defined in the Contract Conditions and the Contract Specifications, and at the unit prices stated above.

ARTICLE III. SPECIAL CONTRACT REQUIREMENTS

1. Component Parts of the Contract

Each Contract consists of the following component parts, all of which are as fully a part of this Contract as if herein set out verbatim, or, if not attached, as if attached hereto:

1. Addenda Nos. _____, _____, _____, and _____
2. Special Provisions of the Contract
3. Project Specifications
4. General Specifications
5. Contract Drawings
6. Instructions to Bidders
7. Advertisement for Bidders
8. Contractor's Proposal
9. This Instrument

In the event that any provision in any of the above component parts of this Contract conflicts with any provision in any other of the component parts, the provision in the component part first enumerated above shall govern over any other component part which follows it numerically, except as may be otherwise specifically stated.

This Contract is intended to conform in all respects to applicable statutes of the State of Wisconsin, and if any part or provision of this Contract conflicts therewith, the said statute shall govern.

2. Starting and Completion

a. Kenosha County anticipates awarding this Contract on or after June 5, 2020.

b. Kenosha County anticipates issuing a formal notice to proceed after June 19, 2020.

c. Upon receipt of written Notice to Proceed the Contractor shall complete all work under the Contract prior to November 1, 2021.

3. Liquidated Damages for Delay

The Contractor guarantees that he/she can and will complete the work within the time limit stated in the Contract Documents, or within the time as extended by the Owner. Inasmuch as the damage and loss to Kenosha County which will result from the failure of Contractor to complete the work within the stipulated time, will be most difficult or impossible of accurate assessment, the damages to Kenosha County for such delay and failure on the part of the Contractor shall be liquidated in the sum of Two Thousand Five Hundred Dollars ($2,500.00) for each calendar day, Sundays and Holidays included, by which the Contractor shall fail to complete the work or any part thereof in accordance with the provisions hereof, and such liquidated damages shall not be considered as a penalty. If the Owner can, with certainty, establish actual damage and loss to the Owner caused by the Contractor's failure to complete the project on time, and that amount is higher than the liquidated damages provided for herein, then at its option Owner may charge against the contract monies due said actual damages rather than liquidated damages.

IN WITNESS THEREOF, the parties hereto have caused this instrument to be executed in three original counterparts, the day and year first written above.

CONTRACTOR:

Company Name: _____

Seal:

_____	_____	_____
Authorized Agent	Title	Date
_____		_____
Attest		Date

KENOSHA COUNTY

Division/Department: Department of Public Works

Seal:

_____	_____	_____
Authorized Agent	Title	Date
_____		_____
Attest		Date

CORPORATE CERTIFICATE

I, _____ certify that I am the _____ of the Corporation named as Contractor hereinabove; that _____ who signed the foregoing Contract on behalf of the Contractor was then _____ of said Corporation; that said Contract was duly signed for and in behalf of said Corporation by authority of its governing body and is within the scope of its corporate powers.

_____
Corporate Seal

ETHICS COMPLIANCE ADDENDUM

It is agreed and understood by all parties to this contract that:

1. In addition to ethical standards set forth in Wisconsin Statutes section 19. 59 for all county employees and officials [either elected or appointed] Kenosha County has adopted an ethics policy that is applicable to county employees in conducting county business. That policy may be reviewed at https://www.kenoshacounty.org/DocumentCenter/View/578/MCKC20?bidId=. It is further understood that all county employees and officials [either elected or appointed] are prohibited from engaging in any criminal conduct contrary to Wisconsin Statutes sections 946.12 involving misconduct in public office and 946.13 involving a private interest in a public contract.

2. This ethics policy is intended to ensure that public trust in Kenosha county government is maintained and that decisions affecting the county and its citizens are made fairly and impartially for the benefit of all citizens and not for personal gain. This policy precludes the misuse or misappropriation of county property or funds for personal use or otherwise, use or disclosure of confidential information for personal gain or otherwise, elimination of conflicts of interests, receipt of gifts or favors or other considerations of value by county employees, the use of the employee's public position to influence or gain unlawful benefits or to influence or gain advantages or privileges for the employee, and the conducting of personal business or campaigning during working hours.

3. This policy, furthermore, requires employees to disclose and report to the proper authorities any violation of this policy or State Statute by either other employees or by any non-employee or citizen seeking to or aiding or abetting in efforts to circumvent this policy. Any employee failing to make such disclosure or report is subject to discipline. This contract also requires that any party contracting with Kenosha County also report any such violation to either the District Attorney or Corporation Counsel for Kenosha County.

4. By executing this contract, each party certifies that it knows of no conflicts of interest or appearance of a conflict or appearance of an impropriety on the part of any current or former county official or employee who may have had a role on deciding which proposal or bid will be accepted, and

5. By executing this contract, each party certifies that no attempt has been made by anyone on behalf of the party submitting a proposal or bid to directly or indirectly illegally influence the awarding of a contract by promise of or delivery of any consideration or any thing of value to a current or former County official or employee or family or household member of a current or former County official or employee, or in any other manner contrary to law, and

6. The parties acknowledge that Kenosha County is a municipal corporation legally bound to comply with the Wisconsin Open Meetings and Public Records laws and that as such, unless otherwise allowed for by law, all aspects of this agreement are subject to open discussion and disclosure are a matter of public record. It is furthermore agreed to that no party will take any action to obstruct the operation of these laws. If records are created or maintained or in the custody of the provider, as an independent contractor, they, along with the raw data used to create the record, are, nevertheless, public records. Within legal constraints related to confidentiality and privacy protection, such records must be made immediately available to the public upon request and in the format in which they were created. Provider agrees to hold the County harmless and to indemnify the County for all costs, fees, including all attorney fees and judgments and damages of whatever kind for which the County may be held liable due to the provider's failure to comply with the Wisconsin Public Records and Open Meetings laws.

7. That any subsequent finding of a violation of either the County's ethics policy or Wisconsin Statutes sections, 19.59, 946.12 and 946.13 by any party or any agent of any party acting either alone or acting in concert with a current or former Kenosha County official or employee may result, at the sole option of Kenosha County, in this agreement being declared null and void and / or may result in the party violating this policy being debarred from submitting proposals, bids or contracting with Kenosha County for a specified period of time in the future.

DATED THIS _____ DAY OF_____, 20___.

_____

Authorized Signature

_____

Print Name

_____

Title

Subscribed and sworn to before me this

_____day of_____,20_____.

_____

Notary Public

My commission expires:

_____

List of Subcontractors

If no subcontractors are used for this project please place an X in the box:

1. Company: _____ Contact Name: _____

   Address:_____

   City/Sate/Zip: _____

   Phone: _____ Fax: _____

   Years as Your Subcontractor: _____ Experience in this type of Project: _____

2. Company: _____ Contact Name: _____

   Address: _____

   City/Sate/Zip: _____

   Phone: _____ Fax: _____

   Years as Your Subcontractor: _____ Experience in this type of Project: _____

Additional Subcontractors must be listed on a separate sheet of paper.

WAIVER AND RELEASE OF LIEN

Whereas, the undersigned supplier or subcontractor, _____

_____

has been employed by Kenosha County to furnish _____

_____for work associated with the following project:

Project Name: _____

Project Location: Kenosha Wisconsin, _____ Kenosha County_____
City, State County

Project Owner: Kenosha County_____.

NOW THEREFORE, for and in consideration of $_____and other good and valuable consideration, the receipt whereof is hereby acknowledged, the undersigned, does hereby waive and release any and all liens, or right to, on claim of lien, and all claims against Kenosha County on the above described project and premises, under any law, common or statutory, on account of labor or materials, or both, heretofore and hereafter furnished by the undersigned to or for the account of said Kenosha County (Project owner) for said project.

Given under my hand and seal this _____ day of _____ 20_____.

_____
Name of Supplier or Sub-Contractor

_____
Signature and Title

Witness: _____

Witness: _____

Return to:

INSTRUCTIONS FOR EXECUTION OF PAYMENT BOND AND EXECUTION OF PERFORMANCE BOND

The penal amount of the Payment and Performance Bond for a unit price Contract shall be the summation of the correct and checked extension of the unit prices with the estimated number of units.

The form of bonds attached hereto shall be used for each Contract. This form contemplates one corporate surety only. In case co-sureties will be furnished, proper forms therefrom shall be obtained.

If the principal is an individual, his full Christian name, and residence shall be inserted in the body thereof, and he shall sign the bond with his usual signature on the line opposite the scroll seal.

If the principals are partners, their individual names shall appear in the body of the bond, with the recital that they are partners composing a firm, naming it.

If the principal is a corporation, the name of the State in which incorporated shall be inserted in the appropriate place in the body of the bond. Said instrument shall be executed and attested under the corporate seal as indicated in the form. If the corporation has no corporate seal, the fact shall be stated, in which case a scroll or adhesive seal shall appear following the corporate name. This also applies to execution by the surety.

If persons other than the President and Secretary are executing the Contract, then a copy of the Corporate Resolution adopted by the Board of Directors authorizing the parties to bind the corporation to this Contract must be attached to this Contract.

The date of the bond must not be prior to the date of the Contract for which it is given.

A Power of Attorney authorizing the execution of the bond by an attorney-in-fact, or Agent, shall be attached to the executed counterpart of the bond. If the bond is executed by an out-of-state agent, the executed counterpart of the bond shall be countersigned by a licensed resident agent.

PAYMENT AND PERFORMANCE BOND

KNOW ALL MEN BY THESE PRESENTS, that _____

as Principal, and _____

as Surety, are held and firmly bound unto _____

_____ in the full and just sum of

_____ Dollars

($_____) lawful money of the UNITED STATES OF AMERICA for the payment of which sum of money well and truly to be made, we bind ourselves, heirs, executors, administrators, successors and assigns, jointly and severally, firmly by these presents.

WHEREAS: The Principal has entered into a certain written Contract, dated the _____ day of _____, 20___, with the _____

_____

for _____ complete, as described in the foregoing Contract and Article of Agreement.

NOW THE CONDITIONS OF THIS OBLIGATION ARE SUCH, that if the said Principal shall in all respects well and truly keep and perform the said Contract, and shall pay all sums of money due or become due, for any labor, materials, apparatus, fixtures or equipment furnished for the purpose of constructing the work provided in said Contract, and shall defend, indemnify and save harmless said _____ against any and all liens, encumbrances, damages, claims, demands, expenses, costs and charges of every kind except as otherwise provided in said specifications and other Contract Documents, arising out of or in relation to the performance of said work and the provisions of said Contract, and shall remove and replace any defects in workmanship or materials which may be apparent or may develop within a period of one (1) year from the date of final acceptance, then this obligation shall be null and void; otherwise it shall remain in full force and effect.

And said Surety, for value received, hereby stipulates and agrees that no change, extension of time, alteration or addition to the terms of the Contract, or to the work to be performed thereunder or the specifications accompanying the same shall in anyway affect its obligation on this bond, and it does hereby waive notice of any such change, extension of time, alteration or addition to the terms of the Contract or to the work or to the specifications.

IN WITNESS WHEREOF, we have hereunto set our hands and seals this _____ day of _____, 20_____.

_____(SEAL)

_____(SEAL)

WITNESS:

_____ _____(SEAL)
(IF INDIVIDUAL OR FIRM)

_____(SEAL)

ATTEST:

_____
(IF CORPORATION)

ATTEST:

_____ _____(SEAL)
(SURETY)

APPROVED _____, 20____ _____(SEAL)
(SURETY)

_____

_____
(TITLE)

GENERAL CONDITIONS TO THE CONTRACT

1 - DEFINITIONS

The following terms used in these Contract Documents are respectively defined as follows:

(a) "Project"

The entire improvement proposed by the Owner to be constructed in whole or in part pursuant to the within Contract or Contracts.

(b) "Owner" or “Department”

The contracting party initiating the project as set forth in the Contract acting through its authorized representative in accordance with specific duties delegated to such representative.

(c) "Contractor"

The person, persons, firm or corporation to whom the within Contract is awarded by the Owner, and who is subject to the terms of said Contract. Also the agents, employees, workmen, or assignees of the Contractor.

(d) "Subcontractor"

A person, firm or corporation, other than the Contractor, supplying labor and materials or labor only, on work at the site of the project.

(e) "Work"

All materials, labor, supervision, use of tools, and equipment necessary to complete the project in full compliance with the terms of the Contract.

(f) "Engineer"

R. A. Smith, Inc. or other Engineers appointed by the Owner for the supervision of construction of the project.

(g) "Surety"

The person, firm or corporation that has executed as Surety the Contractor's Performance Bond, securing the performance of the within Contract. Also the person, firm or corporation that has executed as Surety the Contractor's payment bond which guarantees payment to all persons supplying labor and material utilized in the prosecution of the work included in the Contract.

(h) "Notice"

Where in any section of the Contract Document there is any provision in respect to the giving of any notice, such notice shall be deemed to have been given (as to the Owner) when written notice shall be delivered to the Engineer of the Owner, or shall have been placed in the United States mails, addressed to the Chief Executive Officer of the Owner, at the place where the bids or proposals for the Contract were opened; (as to the Contractor) when a written notice shall be delivered to the Chief Representative of the Contractor at the site of the project to be constructed under the Contract, or when such written notice shall have been placed in the United States mails, addressed to the Contractor at the place stated in the Proposal as the address of his permanent place of business; (as to the Surety) on the Performance Bond when a written notice is placed in the United States mails, addressed to the Surety at the home office of such Surety, and when two (2) copies of such notice shall have been filed with the Owner.

2 - INTENT OF CONTRACT DOCUMENTS

The Sections of the Contract Document and the Contract Drawings are complementary and what is called for by any one shall be binding as if called for by all. The intention of the Contract Document is to include in the contract price the cost of all labor and materials, water, fuel, tools, plants, equipment, light, transportation, and all other expenses as may be necessary for the proper execution and completion of the work included in the Contract.

In interpreting the Contract Documents, words describing materials which have a well-known technical or trade, meaning unless otherwise specifically defined in the Contract Documents, shall be construed in accordance with such well-known meanings recognized by Architects, Engineers, and the trade.

Any work shown on the Contract Drawings and not covered in the Contract Specifications, or included in the Contract Specifications and not shown on the Contract Drawings, shall be executed by the Contractor as though both shown on the Contract Drawings and included in the Contract Specifications. If the Contract Drawings and the Specifications should be contradictory in any part, the Contract Specifications shall govern.

3 - CONTRACT DRAWINGS AND SPECIFICATIONS

All work shall be executed in strict conformity with the Contract Drawings and Specifications, and the Contractor shall do no work without proper drawings and instructions.

Unless otherwise provided in the Special Provisions of the Contract and/or in the Contract Specifications, the Owner will furnish the Contractor, free of charge, all copies of Drawings and Specifications reasonably necessary to carry out the work.

Figured dimensions of the Contract Drawings shall be taken as correct, but shall be checked by the Contractor before starting construction. Any errors, omissions or discrepancies shall be brought to the attention of the Engineer and his decision thereon shall be final. All notes on the Contract Drawings shall be followed. Correction of errors or omissions on the Contract Drawings or the Contract Specifications may be made by the Engineer when such correction can reasonably be considered necessary for the proper execution and completion of the work.

4 - EXISTING UTILITIES AND PIPING

The location of existing piping and underground utilities such as sanitary sewers, gas mains, storm sewers, water mains, electrical duct lines, telephone lines, etc., as shown on the Contract Drawings have been determined from information available from the records of the parent utility companies or from actual field surveys. However, the Owner does not assume responsibility for the possibility that during construction, utilities other than those shown may be encountered or that actual locations may be different from those shown on the Contract Drawings.

At the locations wherein detailed positions of these facilities become necessary to the new construction, the Contractors shall, at their own expense, furnish all labor and tools to either verify and substantiate the record drawing locations, or definitely establish the position of the facilities.

Any pipe or service inadvertently damaged, shall be repaired or replaced to the Owner's satisfaction at the Contractor's expense. All pipe so crossed shall be supported across the trench excavation to the Engineer's satisfaction.

It shall be the responsibility of the Contractor to make all necessary arrangements with the utility companies to locate their facilities including service laterals in the field during construction operations and to relocate any portions of their facilities as required to permit the installation of work included in these Contracts.

5 - SHOP DRAWINGS

The Contractor, as soon as possible, after the approval of the source and purchase of items of materials and equipment, shall submit to the Engineer, shop or setting drawings and schedules for every item of equipment or material to be incorporated in the work which is fabricated or manufactured off the site, including but not limited to those pertaining to structural and reinforcing steel, electrical, plumbing, carpentry, heating and ventilation. The Contractor shall make any corrections in the drawings required by the owner or the Engineer and re-submit same without delay, together with drawings first submitted. Six (6) final copies of all corrected and approved shop or setting drawings shall be submitted to the Engineer who, after checking, will retain three (3) copies and return three (3) copies to the Contractor.

The Engineer's approval of shop drawings of equipment and materials shall extend only to determining the conformity of such equipment and materials with the general features of the Contract Drawings and Contract Specifications prepared by the Engineers. It shall be the responsibility of the Contractor to determine the correctness of all dimensions and minor details of such equipment and materials so that they will fit into the completed work, and so that when incorporated in the work, correct operation will result.

6 - SCHEDULE OF EQUIPMENT ITEMS

As soon as possible after the execution of the Contract on all contracts incorporating manufactured items, the Contractor shall submit to the Owner for approval, the name of the manufacturer of each item proposed to be purchased, together with a complete description of the item and catalog cuts. No final purchase of major equipment shall be made until the written approval of the Owner is obtained, and no deviation from the selected manufacturers as stated in the Contract will be accepted.

7 - "OR EQUAL" CLAUSE

Whenever in any section of the Contract Documents any article, material, or equipment is defined by describing a proprietary product, by using the name of a manufacturer or vendor, the term "or equal", if not inserted shall be implied. The specific article, material or equipment mentioned shall be understood as indicating the type, function, minimum standard of design, efficiency, price, and quality desired and shall not be construed in such a manner as to exclude manufacturer's products of comparable quality, design, price, and efficiency, as approved by the Engineer.

Requests for approvals shall be submitted to Kenosha County in accordance with the Instructions to Bidders.

8 - SCHEDULE AND UNIT PRICES

Promptly following the execution of the Contract Documents, the Contractor shall prepare and transmit to the Owner an original and three (3) copies of an itemized breakdown showing the unit quantities of each item and the corresponding unit prices divided between labor, material and other costs of all items of labor, equipment or supplies to be incorporated into the Project. The breakdown, when approved, will be used primarily in determining payment due the Contractor on periodical estimates.

9 - INSPECTION

The Owner and his representative shall at all times have access to the work wherever and whenever it is located in performance or progress, and the Contractor shall provide proper facilities for such access and inspection.

The Owner shall have the right to reject materials and workmanship, which are defective, or to require their correction. Rejected workmanship shall be satisfactorily corrected, and rejected materials shall be removed from the premises without charge to the Owner. If the Contractor does not correct such condemned work and remove rejected materials within a reasonable time fixed by written notice; the Owner may remove them and charge the expense to the Contractor.

Should it be considered necessary or advisable by the Owner at any time before final acceptance of the entire work, or at any other time, to make an examination of work already completed by removing or tearing out same, the Contractor shall on request promptly furnish all necessary facilities, labor and materials. If such work is found to be defective in any material respect due to fault of the Contractor or his subcontractors, he shall bear all the expense of such examination and of satisfactory reconstruction. If, however, such work is found to meet the requirements of the Contract, the actual cost of labor and materials necessarily involved in the examination and replacement, plus 15% will be allowed the Contractor.

All materials to be incorporated in the work, all labor performed, all tools, appliances and methods used shall be subject to the inspection and approval or rejection of the Owner.

If any authorized agent of the owner shall point out to the Contractor, his foreman or agent, any neglect or disregard of the contract provisions, such neglect or disregard shall be remedied and

further defective work be at once discontinued, but the right of final acceptance or rejection of the work will not be waived by reason thereof, nor by any other act of the Owner or its agents.
The Contractor shall execute the work only in the presence of the Engineer or Inspectors during the working hours of the day, unless provision has been made for work on other shifts. The presence of the Engineer or Inspector shall in no way relieve the Contractor of the responsibility of his contract, or be any warrant for furnishing of bad material or poor workmanship.

The inspection and supervision of the work by the Engineers is intended to aid the Contractor in applying labor, materials and workmanship in compliance with the contract provisions. Such inspection and supervision, however, shall not operate to release the Contractor from any of his contract obligations.

10 - SUPERINTENDENCE

The Contractor will give personal superintendence to the work, or have at the site of the work, at all times, a competent foreman, superintendent, or other representative, satisfactory to the Owner and having the authority to act for the Contractor.

Insofar as is practicable, and excepting in the event of discharge by the Contractor, or in the event of proven incompetence, the individual who has been accepted by the Owner to represent the Contractor shall so act, and shall follow without delay instructions of the Engineer in the prosecution of the work in conformity with the Contract.

11 - LABOR

The Contractor shall employ none but competent and skilled workmen and foremen in the prosecution of work on this Contract. The Owner shall have the authority to order the removal from the work any Contractor's employee who refuses to or neglects to obey any of its instructions or those of the Engineer or Inspectors, relating to the carrying out of the provisions and intent of the provisions of the Contract, or who is incompetent, unfaithful, abusive, threatening or disorderly in his conduct, and any such person shall not again be employed on this Project.

12 - INSPECTION AND TESTING OF MATERIAL

Attention of the Contractor is directed to the material tests required on this Contract. All laboratory tests shall be made by a testing laboratory employed by the Contractor and approved by the Owner. The cost of tests shall be paid by the Contractor. Unless otherwise provided in the Special Provisions of the Contract and/or in the Contract Specifications, the Contractor shall furnish the materials to be tested and incidental materials and labor required at the site in connection with the tests, the cost of which shall be considered as included in the price or prices set forth in the Contract for contract items.

13 - PROTECTION OF WORK

The Contractor shall continuously maintain adequate protection of all his work from damage, and shall protect the Owner's and adjacent property from injury arising in connection with this Contract.

The Contractor shall be responsible for any and all damage to property, public or private, that may be caused by his operations in the performance of his Contract, and the Contractor shall

defend any suit that may be brought against himself and/or the Owner on account of damage inflicted by his operations, and shall pay any judgments awarded to cover such damage.

14 - COST OF SERVICES

The Contractor shall be required to pay the established water rates obtained from the Owner. Large quantities of water for flushing trenches, filling mains, or other operations shall be drawn only at night, or at times specifically authorized by the Owner.

The cost of all power, lighting and heating required during construction shall be paid by the Contractor and its cost merged in this Contract price.

15 - USE OF JOB SITE

The Contractor shall confine his equipment, apparatus, the storage of materials and operations of his workman to limits indicated by the law, ordinances, permit or directions of the Owner and shall not encumber the premises with his materials.

The Contractor shall not load or permit any part of the structure to be loaded with a weight that will endanger its safety. The Contractor shall observe and enforce the Owner's instructions regarding signs, advertisements, fires and smoke.

16 - USE OF PRIVATE LAND

The Contractor shall not use any vacant lot or private land as a plant site, depository for materials, as a spill site, or for any other purpose without the written authorization of the Owner of the land (or his agent). A copy of written authorization shall be filed with the Owner.

17 - ACCESS TO PRIVATE PROPERTY AND SCHEDULE OF CONSTRUCTION

Prior to commencement of any work under this Contract, the Contractor shall confer with the Engineer and other representatives of the Owner and prepare a detailed schedule of construction operations.

This schedule shall be subject to the approval of the Owner, and the Owner reserves the right to subsequently modify the schedule should he deem it necessary.

All construction work shall be prosecuted in a fashion, which will cause a minimum of interference with pedestrian and vehicular traffic. Access to alleys and private driveways shall also be provided as soon as possible.

At the close of each day's construction work, at least one lane of traffic shall be maintained on all streets.

18 - SUBCONTRACTS

The Contractor shall notify the Owner, in writing, of the names of the subcontractors proposed on the Contract and shall not employ any subcontractors until the Owner's approval in writing has been obtained.

The Contractor agrees to be fully responsible to the Owner for the acts or omissions of his subcontractors and of anyone employed directly or indirectly by him or them, and this Contract obligation shall be in addition to the liability imposed by law upon the Contractor.

Nothing contained in the Contract Documents shall create any contractual relationship between any subcontractors and the Owner. The Contractor agrees to bind every subcontractor (and every subcontractor of a subcontractor) by the terms of the General and Special Provisions of the Contract, the Contract Drawings and Specifications, as far as applicable to his work, unless specifically noted to the contrary in a subcontract approved in writing as adequate by the Owner.

19 - ASSIGNMENT OF CONTRACT

No assignment by the Contractor of any construction contract, or any part thereof, or of the funds to be received there under by the Contractor, will be recognized, unless such assignment has had the written approval of the Owner and the Surety has been given due notice of such assignment and has furnished written consent thereto. Such written approval by the Owner shall not relieve the Contractor of the obligations incurred by him under the terms of this Contract. In addition to the usual recitals in assignment contracts, the following language must be set forth:

> "It is agreed that the funds to be paid to the assignee under this assignment are subjected to a prior lien for services rendered or materials supplied for the performance of the work called for in said contract in favor of any persons, firms, or corporations rendering such services or supplying such materials".

20 - OTHER CONTRACTS

The Owner may award other contracts for additional work at the site of the project (or other locations) and the Contractor shall fully cooperate with such other Contractors and carefully fit his own work to that provided under other contracts as may be directed by the Owner. The Contractor shall not commit or permit any act, which will interfere with the performance of work by any other contractor.

21 - OWNER'S RIGHT TO DO WORK

If the Contractor neglects to prosecute the work to be performed on this Contract properly, or fails to perform any provision of this Contract, the Owner, after three days' written notice to the Contractor and his Surety, may, without prejudice to any other remedy he may have, make good such deficiencies and may deduct the cost thereof from the payment due the Contractor.

22 - TERMINATION FOR BREACH

In the event that any of the provisions of this Contract are violated by the Contractor or by any of his subcontractors, the Owner may serve written notice upon the Contractor and the Surety of its intention to terminate this Contract, such notice to contain the reasons for such intention to terminate this Contract, and unless within ten (10) days after the serving of such notice upon the Contractor, such violation shall cease and satisfactory arrangements for correction is made, the Contract shall upon expiration of said ten (10) days cease and terminate. In the event of any such termination, the Owner shall immediately serve notice thereof upon the Surety and the Contractor, and the surety shall have the right to take over and perform the Contract; provided, however, that if the Surety does not commence performance thereof within thirty (30) days from

the date of the mailing to such Surety of notice of termination, the Owner may take over the work and prosecute the same to completion by contract or force account and the expense of the Contractor and his Surety shall be liable to the Owner for any excess cost thereby occasioned the Owner.

In cases where the Contractor has failed to complete minor items of work within the time set for completion of the Contract, but limited to cases where the value of such uncompleted work does not exceed five percent (5%) of the total construction cost of the work, then the Owner shall have the privilege, without terminating this Contract, of completing said items of work and then deducting from the sums due the Contractor under this Contract the total cost which the Owner incurs in completing such minor items of work. In such cases the Owner may complete such minor items of work by force account or by employing some other Contractor to complete such minor items of work. In the event the Owner desires to adopt this procedure, he shall deliver to the Contractor a written statement, enumerating and describing the items not completed, or imperfectly completed, and shall in such statement demand that the Contractor within a time to be fixed in such statement by the Owner, and then if the Contractor refuses to comply, or if he neglects to comply with time stated, the Owner may proceed as in above set forth. The time within which the Contractor shall be required to complete the items set forth in such statement must depend on the amount of time reasonably required for the performance of the work in question, but shall not in any event be less than ten (10) days, nor more than thirty (30) days.

23 - MATERIALS AND WORKMANSHIP

Unless otherwise stipulated in the Contract Specifications, all workmanship, equipment, materials and articles incorporated in the work covered by this Contract shall be new and of the best grade of their respective kinds for the purpose. The Contractor shall furnish to the Owner for his approval the name of manufacturers or machinery, mechanical or other equipment, which he contemplates installing, together with their performance capacities and other pertinent information.

If not otherwise provided, materials or work called for in this Contract shall be furnished and performed in accordance with well-known established practice and standards recognized by Architects, Engineers and the trade.

When required by the Contract Specifications or when called for by the Owner, the Contractor shall furnish the owner, for approval, full information concerning the materials or articles which he contemplates incorporating in the work. Samples of materials shall be submitted for approval when so directed. Machinery equipment, materials and articles installed or used without such approval shall be at the risk of subsequent rejection. All materials and workmanship shall be guaranteed by the Contractor and the Surety for a period of one year from the date of final acceptance, and this guarantee must be covered in the Surety Bond for the Contract.

No material of any kind shall be installed in the project until it has been inspected by the Engineer. All material rejected shall be immediately removed from the site of the work and not again offered for inspection. Any material or workmanship found at any time to be defective shall be remedied at once regardless of previous inspections.

At any time during the course of construction of this project, when, in the opinion of the Engineer, provisions of the Contract Drawings, Specifications or Contract Conditions are being violated by the Contractor or his employees, the Engineer shall have the right and authority to

order all construction to cease or materials to be removed, until arrangements satisfactory to the Engineer are made by the Contractor for resumption of the work in compliance with the provisions of the Contract. It shall not be construed as a waiver of defects if the Engineer shall not order the work stopped or more material removed, as the case may be.

24 - CUTTING AND PATCHING

The Contractor shall do all cutting, fitting or patching of his work that may be required to make its several parts fit together or to receive work of other Contractors shown upon, or reasonably implied by the Contract Drawings and Specifications for the completed project.

Any cost caused by defective or ill-timed work shall be borne by the party responsible therefore.

The Contractor shall not endanger any work by cutting, digging or otherwise shall not cut or alter the work of any Contractor without the consent of the Owner, or of the Owner's authorized representative.

25 - GUARANTEES

All work to be performed under this Contract shall be constructed in compliance with the Contract Drawings, the Contract Specifications and standard construction codes, and must be guaranteed by the Contractor and his Surety for a period of one (1) year from the date of final acceptance by the Owner against defective workmanship and material of any nature. On all items of equipment to be incorporated in the completed project, the Contractor and his Surety must guarantee that the type, quality, design and performance will fully meet the requirements of the Contract Specifications.

In placing orders for equipment, the Contractor shall purchase same only under a written guarantee from the respective manufacturers that the equipment supplied will function satisfactorily as an integral part of the completed project in accordance with the Contract Drawings and Specifications and that the manufacturer will repair or otherwise make good any defects in workmanship or materials which may develop within a period of one (l) year from the date of final acceptance. Furthermore, the Contractor shall require that the manufacturer agree in writing at the time the order for equipment is placed that he will be responsible for the proper functioning of the equipment in cooperation with the Contractor, and that whenever necessary during the installation period or tuning-up period following the construction period, the manufacturer will cooperate as may be necessary for initial successful operation and will supply, without additional cost to the Owner, such superintendence and mechanical labor as may be necessary to make any adjustments, and to supply additional parts and labor needed to make the equipment function satisfactorily, even if same was not shown on the approved shop drawings. Two (2) copies of each guarantee of agreement shall be furnished to the owner by the Contractor.

26 - FINAL TESTS

After completion of the work to be performed on this Contract, the Contractor shall make any and all tests required by Municipal or State regulations, and, where so provided in said regulations, shall furnish the Owner with certificates of inspection by the Municipal or State regulatory bodies. The Contractor shall also make all tests required by the National Board of Fire Underwriters for the purpose of determining insurance rates or other protection of the Owner or

the public, and all tests needed to determine complete and faithful compliance with all provisions of this Contract.

27 - CLEANING UP AND FINAL INSPECTION

The Contractor shall at all times keep the site of the work free from accumulation of waste material or rubbish caused by his employees on the construction work, and at the completion of the work he shall remove all his rubbish from and about the work and all his tools, equipment, scaffolding, and surplus materials, and shall leave the completed work clean and ready for use. In case of dispute, the Owner may remove the rubbish and surplus materials and charge the cost to the several Contractors, if more than one is employed on the project, in proportion to the amounts as shall be determined by the Owner to be just.

When requested by the Engineer, the Contractor shall, in the case of sewer and water main and other subsurface construction, remove sheeting, clean up the area, restore subgrade and/or pavement, replace topsoil, seed areas, etc., for individual sections of the work as they are completed rather than upon completion of the project.

On or before completion of the work the Contractor shall, without charge, tear down and remove all buildings and other structures built by him for facilitating the carrying out of the work, and shall remove all rubbish of all kinds from the grounds which he has occupied and shall leave the work clean and in good condition.

All sewers, conduits, pipes and appurtenances and all tanks, pump wells, chambers, buildings and other structures shall be kept clean during construction and as the work, or any part thereof, approaches completion, the Contractor shall systematically and thoroughly clean and make any needed repairs to them. He shall furnish at his own expense suitable tools and labor for removing all water and clearing out all dirt, mortar and foreign substances. Any undue leakage of water into the structures, such as to make the work, in the opinion of the Engineer, fall short of first class work shall be promptly corrected by the Contractor at his own expense. Cleaning and repairs shall be arranged, as far as practicable, to be completed upon finishing the construction work.

Notice to begin final cleaning and repairing, if such is needed; will be given by the Engineer who, at the time, will make his final inspection of the work. The Engineer will not approve the final estimate of any portion of the work until after the final inspection is made and the work found satisfactory.

28 - CONTRACTOR'S INSURANCE

The Contractor shall not commence work under this Contract until he has obtained all insurance required under this paragraph. Certificates of Insurance, together with duplicates of the policies, fully executed by officers of the Insurance Company, shall be filed with the Engineer and Owner for approval. The Contractor shall not allow any subcontractor to commence work on his subcontract until all similar insurance required for the subcontractor has been so obtained and approved. The Contractor shall also submit the original insurance policies for inspection and approval of the Owner before work is commenced. Said policies shall not thereafter be cancelled, permitted to expire, or to be changed without ten-(10) days' notice in advance to the Owner and consented to by the Owner, and the policy shall so provide.

(a) Compensation Insurance: Before any work is commenced, the Contractor shall take out and maintain during the life of this Contract, Worker's Compensation Insurance for all of his employees employed at the site of the Project. In case any work shall be sublet, the Contractor shall require the Subcontractor similarly to provide Worker's Compensation Insurance for all of the latter's employees, unless such employees are covered by the protection afforded by the Contractor. In case any class of employees engaged in work under this Contract at the site of the Project is not protected under the Worker's Compensation Statute, the Contractor shall provide for any such of his employees, and shall provide or cause such Subcontractor to provide Employer's Liability Insurance for the protection of his employees not protected by the Worker's Compensation Statute.

(b) Public Liability and Property Damage Insurance: The Contractor shall take out and maintain during the life of this Contract such Comprehensive Public Liability and Property Damage Insurance as shall protect him, the Owner, and any Subcontractor during the performance or work covered by this Contract from claims or damages for personal injury, including death, as well as for claims for property damages, which my arise from operation under this Contract, whether such operations be by himself or by any Subcontractor, or by anyone directly or indirectly employed by either of them, or in such a manner as to impose liability on the Owner, and the amounts of such insurance shall name the Owner as insured along with the Contractor, and shall hold harmless the owner against all suits and claims arising from or as the result of the operations of the Contractor or his Subcontractors. In absence of specific regulations, the amount of coverage shall be as follows:

Comprehensive Public Liability Insurance in an amount not less than $1,000,000 for injuries, including accidental death to any one person, and subject to the same limit for each person in an amount not less than $2,000,000 on account of one accident, and Property Damage Insurance in an amount not less than $500,000.

In addition to the above, the Contractor's Liability and Property Damage Insurance shall be endorsed to provide contractual liability coverage for an owner.

(c) Insurance Covering Special Hazards: Special hazards as determined by the Owner, shall be covered by rider or riders in the Comprehensive Public Liability and/or Property Damage Insurance Policy or Policies herein elsewhere required to be furnished by the Contractor, or by separate policies of insurance in the amounts as defined in the Special Provisions of the Contract, included herewith.

(d) Automobile Insurance: The Contractor shall take out and maintain during the life of the Contract, Automobile Public Liability Insurance in amounts not less than $1,000,000 and Property Damage Liability Insurance in an amount not less than $1,000,000 if any teams or motor vehicles are engaged in operations within the terms of this Contract on the site of the work to perform thereunder. Such insurance shall cover the use of all such teams and motor vehicles engaged in operating within the terms of this Contract on the site of the work to be performed thereunder, unless such coverage is included in the insurance specified in Paragraph (b) above.

(e) Subcontractor's Insurance: The Contractor shall require Subcontractors, if any, not protected under the Contractor's insurance policies to take out and maintain insurance of the same nature and in the same amounts as required of the Contractor for Comprehensive Public Liability and Property Damage.

(f) Fire Insurance: The Contractor shall take out and maintain a fire, extended coverage, vandalism and malicious mischief insurance policy protecting the Contractor and the Owner up to the date of final acceptance of the completed work performed under this Contract, in an amount equal to the value of the work completed.

29 - PROOF OF CARRYING INSURANCE

The Contractor shall furnish to the Owner satisfactory proof of carriage of the insurance required in a reliable company or companies before commencing any work. Such proof shall consist of certificates executed by the respective insurance companies and filed with the Owner. The Contractor shall also submit the original insurance policies for inspection and approval of the Owner before work is commenced. Said policies shall not thereafter be cancelled, permitted to expire, or be changed without notice of ten (10) days' in advance to the Owner and consented to by the Owner.

If the Contractor does not furnish evidence of insurance coverage required for fire, extended coverage, vandalism and malicious mischief insurance as required under Paragraph 28 (f) above, he shall be deemed to be self-insured for these insurance requirements.

30 - CONTRACT SECURITY

The Contractor shall furnish a Surety Bond, or Bonds (form attached) in an amount at least equal to 100 percent (100%) of the contract price as security for the faithful performance of this Contract. The Performance Bond must contain a separate binding provision that the Surety will guarantee the payment of all persons performing labor and furnishing materials in connection with this Contract.

31 - DAMAGE CLAIMS TO BE PAID BY CONTRACTOR - OWNER TO BE HELD HARMLESS

The Contractor in the performance of this Contract, shall put up and maintain barriers and lights as will effectively prevent the happening of any accident in consequence of any depressions, holes or the accumulation of any obstruction or hazards of any nature whatsoever made or suffered upon the premises, public sidewalks, highways, or areas within the immediate vicinity of said construction; and shall hold the Owner safe and harmless for the happening of any accident claimed or alleged to be the result of any negligence which is the proximate result of the doing or performing any work or service in connection with the immediate vicinity; and Contractor and his Surety or liability carrier will assume such liabilities and will pay on demand any and all damage or damages occasioned as herein specified.

The Contractor shall well and truly save and indemnify and keep harmless the Owner against all liability, judgments, costs and expenses which may in any way come against the Owner in consequence of the granting of this Contract to said Contractor, or which may in any way result from the carelessness or neglect of the said Contractor, or the agents, employees, or workmen of said Contractor in any respect whatsoever.

32 - CLAIMS AND PAYMENT FOR LABOR, MATERIAL OR WORK

The Contractor shall save the Owner harmless from all claims or demands of any Subcontractor employed by the Contractor or from any claims or demands of any person, firm or corporation furnishing any material, apparatus, fixtures, services, machinery or labor to the Contractor herein for the doing of the work referred to herein, and it is expressly understood and agreed that the liability of whatsoever kind or nature, including those referred to and established by Sec. 779.16 and 289.53 of the Wisconsin Statutes of 1955 and acts supplementary thereto.

Further, the Contractor shall pay all claims for work and labor performed and materials furnished in or about the work herein referred to, and Surety shall undertake that the Contractor will pay all claims for work or labor performed and materials furnished, and that the said Contractor shall pay to each and every person or party entitled thereto all claims for work or labor performed and materials furnished for on, in, or about said building or under this Contract.

33 - DEFENSE OF CLAIMS OR SUITS BY REASON OF PATENT INFRINGEMENT

The Contractor shall pay for all royalties and patents for any patented product used by him or incorporated in the work, and shall defend all claims or suits for infringement of any patent right brought against himself or the Owner, and shall save the Owner harmless from loss on account thereof; the Contractor shall indemnify and save harmless the Owner and its officers and agents from all damages, judgments, claims and expenses arising from the infringement of any letters patent, or patent right, or because of any royalty, fee or license for the use, arrangement or operation of any tools, machinery, appliances, devices, or materials which may be used by the Contractor or furnished by him in fulfillment of the requirements of this Contract. In the event of any claim or action at law on account of such patents or fees, it is agreed that the Owner may retain out of the monies which are or which may become due the Contractor under this Contract, a sum of money sufficient to protect itself against loss, and to retain the same until said claims are paid or satisfactorily adjusted.

34 - PERMITS, SURVEYS AND COMPLIANCE WITH LAWS

The Contractor shall procure and pay for all permits, licenses, and bonds necessary for the prosecution of the work and/or required by Municipal, State and Federal Regulations and Laws, unless specifically provided otherwise in the Special Provisions of the Contract, and/or in the Contract Specifications.

The Contractor shall give all notices, pay all fees, and comply with all Federal, State and Municipal Laws, Ordinances, Rules and Regulations, and Building and Construction Codes bearing on the conduct of the work. This contract, as to all matters not particularly referred to and defined therein, shall notwithstanding be subject to the provisions of all pertinent ordinances of the Municipality within whose limits the work is constructed which ordinances are hereby made a part hereof with the same force and effect as if specifically set out herein.

35 - ACCIDENT PREVENTION

Precautions shall be exercised at all times for the protection of persons (including employees) and property. The safety provisions of applicable laws, building and construction codes shall be observed. Machinery equipment and all hazards shall be guarded (or hazards eliminated) in accordance with the safety provisions of the manual of Accident Prevention in Construction, published by the Associated General Contractors of America, to the extent that such provisions are not in contravention of applicable law.

The Contractor shall put up and maintain such barriers and supply such watchmen as will effectively prevent accidents and, in addition, during night hours he shall put up and maintain sufficient lights and flares to warn and safeguard the public against accidents. The Contractor in executing the work on this project shall not unnecessarily impede or interfere with traffic on public highways or streets, and the Owner is to be the sole judge as to what constitutes unnecessary interference with traffic, or as to what constitutes a hazard in traffic. The Contractor shall confer with him and keep local Police and Fire Departments fully informed as to streets or alleys which are to be closed to traffic for construction purposes.

36 - SANITARY CONVENIENCE

The Contractor shall provide and maintain on the construction work at all times suitable sanitary facilities for use of those employed on this contract without committing any public nuisance. Pit type toilets shall be of proper design and fly-tight. All toilet facilities shall be subject to approval of local and state departments of health.

37 - NOTICE TO START WORK

The Contractor shall notify the Engineer in writing forty-eight (48) hours before starting work at the site of this Contract of his intention to do so. In case of a temporary suspension of work, he shall give a similar notice before resuming work.

38 - WORK IN BAD WEATHER

No construction work shall be done during stormy, freezing or inclement weather, except as can be done satisfactorily and in a manner to secure first class construction throughout, and then only subject to permission of the Owner.

39 - MEASUREMENT OF WORK

Unit Price Basis: If any or all of the work to be performed under this contract is on a unit price basis, the actual number of units of each unit price item of work actually performed may be more or less than the number stated in the Bidding Schedule of the Proposal, or included in the Contract, but no variation in the contract unit price will be made on that account. Payment will be made only for the actual number of units incorporated in the work, or for the actual number of units of work performed, and at the contract unit price for each such unit.

40 - OWNER'S RIGHT TO WITHHOLD CERTAIN AMOUNTS AND MAKE APPLICATION

The Owner may withhold from payments to the Contractor, in addition to retained percentage, such an amount or amounts as may be necessary to cover:

(a) Payments that may be earned or due for just claims for labor or materials furnished in and about the work.

(b) For defective work not remedied.

(c) For failure of the contractor to make proper payments to the Subcontractors.

(d) Reasonable doubt that this Contract can be completed for the balance then unpaid.

(e) Evidence of damage to another Contractor.

(f) Liquidated damages due to failure to meet contract completion dates.

The Owner will disburse and shall have the right to act as agent for the Contractor in disbursing such funds as have been withheld pursuant to this paragraph to the part or parties who are entitled to payment therefrom. The Owner will render to the Contractor a proper accounting of all such funds disbursed in behalf of the Contractor.

The Owner also reserves the right, even after full completion and acceptance of the work, to refuse payment of the final ten percent (10%) due the Contractor until it is satisfied that all Subcontractors, material suppliers and employees of the Contractor have been paid in full.

41 - CHANGES - PAYMENT

The Owner may authorize changes in the work to be performed or the materials to be furnished under the provisions of this Contract.

Adjustment, if any, in the amounts to be paid to the Contractor by reason of any such changes shall be determined by one or more of the following methods:

(a) By unit prices contained in the Contractor's original bid and incorporated in his construction contract.

(b) By a supplemental schedule of prices contained in the Contractor's original bid and incorporated in this construction contract.

(c) By an acceptable lump sum or unit price proposal by the Contractor.

(d) On a cost-plus limited basis not to exceed a specified limit (defined as the cost of labor, materials and insurance) plus a specified percentage of the cost of such labor, materials and insurance provided the specified percentage does not exceed fifteen percent (15%) of the aggregate of the cost of such labor, materials and insurance, and shall in no event exceed a specified limit.

No claim for an addition to the contract price will be valid unless authorized as aforesaid.

In cases where a lump sum proposal is submitted by the Contractor in excess of Five Hundred Dollars ($500.00) and the Owner considers the proposal so submitted is excessive or unreasonable for the changes or added work contemplated, the Owner reserves the right to request a proposal for the same changed items from other Contractors. If a proposal for such added work is obtained from other Contractors at a lesser amount, the Owner reserves the right to make an award of such work to another Contractor, unless the Contractor on this Contract agrees to do the added work or changed work for the price named by the other Contractor.

It shall be expressly understood and hereby agreed to by the Contractor that no claim for extra work will be recognized by the Owner unless same has been ordered, in writing, by the Owner, or unless claim for such added work has been filed by the Contractor within five (5) days after the end of the calendar month in which such alleged work was performed. Inspectors and Resident

Engineers are not authorized to act for the Owner in giving orders for the Owner for extra or additional work, either in writing or verbally.

42 - DEDUCTION FOR UNCORRECTED WORK

If the Owner deems it expedient to accept work damaged or not done in accordance with the Contract, an equitable adjustment will be made with a proper deduction from the contract price for unsatisfactory work.

43 - FINAL ACCEPTANCE OF THE WORK

The Contract shall be deemed as having been finally accepted by the Owner when its governing body, by formal resolution, accepts the work.

44 - CORRECTION OF WORK AFTER FINAL PAYMENT

Neither the final payment on this Contract by the Owner nor any provision in these Contract Documents shall relieve the Contractor or Surety of the responsibility for negligence in the furnishing and installation of faulty materials or for faulty workmanship which shows up within the extent of the period provided by law nor of the responsibility of remedying such faulty workmanship and materials.

45 - OWNER'S RIGHT TO USE UNCOMPLETED WORK

The Owner shall have the right to take possession of and use portions of the work prior to final acceptance without waiving rights against the Contractor or his Surety for defects in the work or failure to complete same in its entirety.

46 - PAYMENTS

Pay estimate periods shall close on the last day of each calendar month so that completed estimates can be computed for processing. On each partial payment during the progress of the project, the Owner will retain an amount in accordance with Chapter 66.29 Wisconsin Statutes. The value of work installed will be computed by deducting the estimated cost of street surfacing and site restoration work on those portions of the work installed from the unit bid price extensions for the various items of work. No payment will be made for material stored at the job site.

47 - SITE RESTORATION

The Contractor shall restore the entire site and adjacent properties to the same condition it was prior to the start of work by the Contractor. All items including but not limited to alleys, parking lots, gravel shoulders, driveways, water pipes and laterals, storm sewers, retaining walls, fences, ditches, stone rip-rap, sanitary sewers and laterals, gas mains, culverts, utility poles, signs, mail boxes, walks, sod, shrubs, trees, asphalt walks, etc., shall be protected by the Contractor, and such items as the Contractor finds it impossible to protect from damage or removal shall be replaced in kind by the Contractor.

48 - DELAYS

If the work of the Contractor is delayed because of any acts or omissions of any other Contractor, the Contractor shall have no claim against the Owner on that account other than an extension of time.

In case any action in court is brought against the Owner or Engineer, or any officer or agent of either of them, for the failure, omission or neglect of the Contractor, utility company or owner of other facilities within the project area to perform any of the covenants, acts, matters or things by this Contract undertaken, or for injury or damage caused by the alleged negligence of the Contractor or his subcontractors or his or their agents, or in connection with any claim based on lawful demands of subcontractors, workmen, material men, or suppliers, the Contractor shall indemnify and save harmless the Owner and Engineer and their officers or agents, from all losses, damages, costs, expenses, judgments or decrees arising out of such action.

GENERAL SPECIFICATIONS

Shall Conform To:

STATE OF

WISCONSIN

DEPARTMENT OF TRANSPORTATION

STANDARD SPECIFICATIONS

for

HIGHWAY AND STRUCTURE

CONSTRUCTION

2020 Edition

And As Amended

KENOSHA COUNTY DPW
ROAD IMPROVEMENT PROJECT
RD16-003

IN: CTH S
AT: AMAZON WEST DRIVEWAY TO CTH H

KENOSHA COUNTY
WISCONSIN

May 2020

PROJECT SPECIFICATIONS INDEX

Article	Description	Page #
1.	General.	1
2.	Scope of Work.	1
3.	Prosecution and Progress.	1
4.	Traffic.	2
5.	Holiday Work Restrictions.	4
6.	Utilities.	4
7.	Other Contracts.	5
8.	Information to Bidders, U.S. Army Corps of Engineers Section 404 Permit.	5
9.	Environmental Protection, Aquatic Exotic Species Control.	5
10.	Information to Bidders, Storm Water General Construction Discharge Permit.	6
11.	Construction Over or Adjacent to Navigable Waters.	6
12.	Erosion Control.	6
13.	Maintaining Drainage.	8
14.	Public Convenience and Safety.	8
15.	Coordination with Businesses and Residents.	9
16.	Notice to Contractor – Contaminated Soils.	9
17.	Notice to Contractor – Subsurface Exploration.	9
18.	Notice to Contractor – Airport Operating Restrictions.	9

19. QMP Base Aggregate Dense 1 1/4-Inch Compaction, Item 371.1000.S. 10

20. QMP HMA Pavement Nuclear Density. 17

21. Bar Steel Reinforcement HS Stainless Structures, Item 505.0800.S. 20

22. Cover Plates Temporary, Item 611.8120.S. 22

23. Pipe Grates, Item 611.9800.S. 22

24. Salvaged Rail, Item 614.0920; Salvaged Guardrail End Treatments, Item 614.0925. 23

25. Temporary Ditch Checks, Item 628.7504. 23

26. Removing Signs Type II, Item 638.2602. 23

27. Nighttime Work Lighting-Stationary. 23

28. Catch Basins Median 1 Grate, Item SPV.0060.01. 25

29. Field Office, Item SPV.0060.02. 25

30. Connect Drain Tile, Item SPV.0060.03. 26

31. Utility Line Opening, Item SPV.0060.04. 27

32. Silt Fence Heavy Duty, Item SPV.0090.01. 28

33. Asphaltic Curb Temporary, Item SPV.0090.02. 28

34. Proof Rolling, Item SPV.0170.01. 29

35. Stormwater Treatment Filter Strips, Item SPV.0180.01. 29

36. Select Crushed Material for Travel Corridor, Item SPV.0195.01. 30

PROJECT SPECIFICATIONS

1. General.

Perform the work under this construction contract for Kenosha County project RD 16-003, CTH S, Amazon West Driveway to CTH H in Kenosha County, Wisconsin as the plans show and execute the work as specified in the State of Wisconsin, Department of Transportation (WisDOT) Standard Specifications for Highway and Structure Construction, 2020 Edition, as published by WisDOT, and these special provisions.

2. Scope of Work.

The work under this contract shall consist of excavation common, base aggregate dense, concrete curb and gutter, asphalt paving, storm sewer, pavement marking, permanent signing, traffic control, a bridge structure, erosion control, restoration, and all incidental items necessary to complete the work as shown on the plans and included in the proposal and contract.

3. Prosecution and Progress.

Begin work within ten calendar days after the engineer issues a written notice to do so.

Provide the start date to the engineer in writing within a month after executing the contract but at least 14 calendar days before the preconstruction conference. Upon approval, the engineer will issue the notice to proceed within ten calendar days before the approved start date.

To revise the start date, submit a written request to the engineer at least two weeks before the intended start date. The engineer will approve or deny that request based on the conditions cited in the request and its effect on the owner's scheduled resources.

When, in the fall of 2020, after the new westbound travel lanes are substantially completed and as approved by the engineer to allow for opening the new CTH S westbound roadway to westbound traffic, and weather conditions or seasonal restrictions preclude the satisfactory performance of further work under this contract, the engineer will, in writing, suspend operations until the spring of 2021. Resume construction operations in the spring of 2021 within ten days after the date on which a written order to do so has been issued by the engineer. The contractor may be allowed to continue work through the winter only with prior approval in writing from Kenosha County and the engineer. Any request made to continue work through the winter must include provisions for ongoing erosion control, maintaining traffic, emergency vehicle access, and Kenosha County maintenance operations (predominantly snow plows).

Utility Relocation Schedule

Utility relocation work is anticipated to be completed in August 2020. Schedule road construction operations to account for utility relocation work occurring simultaneously with road construction. Contact each individual utility company to determine the current status of relocation work and their anticipated completion schedule. Refer to the Utilities section of these specifications for more information.

Demolition Schedule

Demolition of the existing buildings by others on parcel #15 & #16 (9300 and 9220 38th Street) as shown in the Plat section (plat #RD16-003) of the plans is anticipated to be complete in August 2020. Do not encroach onto or construct any improvements across these parcels prior to verification from Kenosha County that the buildings have been completely demolished.

Fish Spawning

There shall be no instream disturbance of Kilbourn Road Ditch as a result of construction activity under or for this contract, from March 15 to June 1 both dates inclusive, in order to avoid adverse impacts upon the spawning of fish species.

Any change to this limitation will require submitting a written request by the contractor to the engineer, subsequent review and concurrence by the Department of Natural Resources (DNR) in the request, and

final approval by the engineer. The approval will include all conditions to the request as mutually agreed upon by Kenosha County and DNR.

Northern Long-eared Bat *(Myotis septentrionalis)*

Northern Long-eared Bats (NLEB) have the potential to inhabit the project limits because they roost in trees. Roosts may not have been observed on this project, but conditions to support the species exist. The species and all active roosts are protected by the Federal Endangered Species Act. If an individual bat or active roost is encountered during construction operations, stop work and notify the engineer.

In accordance to the final 4(d) rule issued for the NLEB, the DNR has determined that the proposed activity may affect, but will not result in prohibited take of the NLEB. The activity involves tree removal, but will not occur within 0.25 miles of a known hibernacula, nor will the activity remove a known maternity roost tree or any other tree within 150 feet of a known maternity roost tree.

If additional trees need to be removed, no clearing shall occur without prior approval from the engineer, following coordination with the WDNR. Additional tree removal beyond the area originally specified will require consultation with the United States Fish and Wildlife Service (USFWS) and may require a bat presence/absence survey. Notify the engineer if additional clearing cannot be avoided to begin coordination with the WisDOT REC. The WisDOT REC will initiate consultation with the USFWS and determine if a survey is necessary.

Submit a schedule and description of clearing operations with the ECIP 14 days prior to any clearing operations. The DNR will determine, based on schedule and scope of work, what additional erosion control measures shall be implemented prior to the start of clearing operations, and list those additional measures in the ECIP.

4. Traffic.

Complete all work in accordance with the requirements of section 643 of the standard specifications, as detailed in the traffic control plans, and as herein described. All variations from the traffic control plans shall be approved in writing at least 48 hours prior to any traffic control change. Notify the engineer at least 48 hours prior to any traffic control changes.

Maintain emergency access at all times along CTH S and all side roads throughout the project. Maintain access to all properties within the project limits at all times. Methods and materials utilized to maintain access to properties are incidental to the project.

No operations shall proceed until all traffic control devices for such work are in the proper location.

Close CTH S to through traffic from the beginning of the project to the west side of 38th Street. Detour CTH S traffic as shown on the plans.

Construct CTH S from 38th Street (including the 38th Street intersection) to the end of the project in stages as described below. Keep CTH S, from 38th Street to the end of the project, open to one lane of traffic in each direction at all times, except for one 24-hour period sometime between 7:00 PM Friday and 6:00 AM Monday, to construct Stage 2A to reopen the CTH S intersection with 38th Street to one lane of traffic in each direction.

The adjacent WisDOT sponsored project (ID 3210-00-75, CTH S from CTH H to Brumback Boulevard) will install a temporary median cross-over just beyond this east project limits (Sta. 113+00'WB' to Sta. 116+00'WB') no later than August 29, 2020 to accommodate a switch in traffic pattern for Stage 2 construction.

Stage 1 – 38th Street to End Project

Maintain one lane of CTH S traffic in each direction on the existing roadway. Construct the north half of the finished roadway (the westbound roadway), including lane and shoulder final HMA pavement surface, shoulders, curb and gutter, storm sewer, shared-use path, and other incidental items.

Maintain traffic on the existing 96th Avenue roadway and construct the new 38th Street roadway from CTH S up to the existing 96th Avenue roadway. Do not close 96th Avenue (Stage 1B) until the new 38th Street connection to 96th Avenue is complete and open to traffic.

Coordinate traffic control switches with the adjacent WisDOT project ID 3210-00-75. Work performed west of Sta. 113+00'WB' is included under this contract.

Stage 2 – 38th Street to End Project

Shift both directions of CTH S traffic onto the new westbound lanes constructed under Stage 1 construction. Close the existing CTH S roadway to through traffic to construct the new eastbound finished roadway, including lane and shoulder final HMA pavement surface, shoulders, curb and gutter, storm sewer, and other incidental items.

Do not shift traffic until the crossover constructed under project ID 3210-00-75 is in place, which is required under that contract by August 29, 2020. Coordinate traffic control switches with the adjacent WisDOT project ID 3210-00-75.

Winter Shutdown – Entire Project Length

Maintain traffic along the entire project length during winter shutdown. Remove detour signs or cover detour signs during the winter shutdown. Covering or removal and reinstallation of detour signs is incidental to the contract.

Methods for opening the roadway to traffic will depend on the amount of work completed in 2020 during Stage 1:

Option 1 – Westbound roadway completed in 2020. Eastbound roadway east of 38th Street and other select locations as needed completed in 2020

Close the north lane of the existing CTH S roadway and close the south lane of the newly constructed CTH S westbound lanes to traffic. Maintain one lane of westbound traffic on the north lane of the newly constructed CTH S westbound lanes. Maintain one lane of eastbound traffic on the south lane of the existing CTH S roadway. Maintain traffic access across the median openings on temporary pavement. Maintain all traffic control devices and appurtenances during the winter shutdown in accordance with section 643 of the standard specifications. Maintenance of traffic control during the winter shutdown is incidental to the Traffic Control item.

Option 2 – Westbound roadway completed in 2020. No portion of eastbound roadway completed in 2020

Close the existing CTH S roadway and maintain two directions of traffic on the newly constructed CTH S westbound lanes for the entire length of the project. Coordinate traffic control at the east end of the project with the adjacent WisDOT project ID 3210-00-75 to utilize the cross-over constructed under that contract. Utilize the existing concrete pavement left in place in front of the Amazon Sortation facility near the west end of the project as a cross-over.

Stage 3

Close the inside lanes of traffic in both the eastbound and westbound directions and maintain one lane of traffic in each direction on the outside lanes of each of the eastbound and westbound roadways. Construct the remaining median curb and gutter, storm sewer, and other incidental items necessary to complete the project.

Night Work – Entire Project

Night work is allowed during non-peak hours from 7:00 PM until 6:00 AM Sunday evening through Friday morning with prior written authorization from the engineer. Close CTH S to through traffic during night work to construct culvert pipe and storm sewer pipes crossing the existing roadway. Place portable changeable message signs at least 3 days prior to the night closure. Maintain emergency vehicle access through the entire construction zone during night work at all times. Do not close CTH S for night work more than 2 consecutive nights or for more than 5 nights in total under this contract.

Wisconsin Lane Closure System Advance Notification

Provide the following advance notification to the engineer for incorporation into the Wisconsin Lane Closure System (LCS).

TABLE 108-1 CLOSURE TYPE AND REQUIRED MINIMUM ADVANCE NOTIFICATION

Closure type with height, weight, or width restrictions (available width, all lanes in one direction < 16')	**MINIMUM NOTIFICATION**
Lane and shoulder closures	7 calendar days
Full roadway closures	7 calendar days
Ramp closures	7 calendar days
Detours	7 calendar days
Closure type without height, weight, or width restrictions (available width, all lanes in one direction ≥16')	**MINIMUM NOTIFICATION**
Lane and shoulder closures	3 business days
Ramp closures	3 business days
Modifying all closure types	3 business days

Discuss LCS completion dates and provide changes in the schedule to the engineer at weekly project meetings in order to manage closures nearing their completion date.

5. Holiday Work Restrictions.

Do not perform work on, nor haul materials of any kind along or across any portion of the highway carrying CTH S traffic, and entirely clear the traveled way and shoulders of such portions of the highway of equipment, barricades, signs, lights, and any other material that might impede the free flow of traffic during the following holiday periods:

- From noon Friday, May 22, 2020 to 6:00 AM Tuesday, May 26, 2020; Memorial Day;
- From noon Friday, July 3, 2020 to 6:00 AM Monday, July 6, 2020; Independence Day;
- From noon Friday, September 4, 2020 to 6:00 AM Tuesday, September 8, 2020; Labor Day.
- From noon Wednesday, November 25, 2020 to 6:00 AM Monday, November 30, 2020; Thanksgiving.

- From noon Friday, May 28, 2021 to 6:00 AM Tuesday, June 1, 2021; Memorial Day;
- From noon Friday, July 2, 2021 to 6:00 AM Tuesday, July 6, 2021; Independence Day;
- From noon Friday, September 3, 2021 to 6:00 AM Tuesday, September 7, 2021; Labor Day.

6. Utilities.

This contract does not come under the provision of Administrative Rule Trans 220.

There are known underground and overhead utility facilities located within the project limits. There are known utility adjustments required for this project. Coordinate construction activities with a call to Digger's Hotline or a direct call to the utilities that have facilities in the area as required per statues. Use caution to insure the integrity of underground and overhead facilities.

The following utilities have facilities within the project. Anticipated utility relocation work has begun and may be occurring simultaneously with the start of road construction operations. Contact each utility company listed in the plans prior to bidding to obtain confirmation on the status of utility relocation work within the project limits.

AT&T Wisconsin has underground and aerial fiber optic and copper cable throughout the project. Conflicts are currently being relocated are anticipated to be completed by July 31, 2020. Utility relocations may be occurring simultaneously with road construction operations.

Kenosha Water Utility has water and sanitary sewer lines south of CTH S and west of CTH H, which are outside the proposed project limits. Relocations are not anticipated.

Private Water System – 96th Avenue Residents own a private well water system that has water mains running north and south along both the east and west sides of 96th Avenue. No relocations are anticipated; however, these will not be marked by Digger's Hotline or the local community. Contact Bill Rock at 262-358-5575 or rockhouse4@yahoo.com to have these lines located.

Spectrum has underground and aerial facilities throughout the project. Conflicts are currently being relocated and are anticipated to be completed by July 31, 2020. Utility relocations may be occurring simultaneously with road construction operations.

WE Energies (Electric) has underground and aerial facilities throughout the project. Conflicts are currently being relocated and are anticipated to be completed by July 31, 2020. Utility relocations may be occurring simultaneously with road construction operations. We Energies will install permanent street lighting at the CTH S intersection with 120th Avenue, 100th Avenue, and 38th Street only upon completion of the intersection. Notify WE Energies upon completion of road work at these side roads.

WE Energies (Gas) has underground facilities throughout the project that are anticipated to be in conflict with road construction. The majority of relocation work is planned to be completed prior to construction. As part of WE Energies' relocations, temporary gas main was installed around the homes waiting to be demolished near Sta. 10425'WB' LT and Sta. 105+25'WB' LT. WE Energies will relocate and discontinue in place this temporary gas main after these two houses have been demolished.

Coordinate construction activities with a call to Diggers Hotline or a direct call to the utilities for the underground facilities in the area, as required per state statutes. Use caution to maintain the integrity of utilities. Coordinate with the engineer to adjust plans as needed to avoid any unanticipated utility conflicts.

7. Other Contracts.

Coordinate work in accordance to section 105.5 of the standard specifications.

Modifications to the traffic control plan may be required by the engineer to coordinate work undertaken by others. The following contracts are anticipated to be under construction within the time period of the contract, unless otherwise indicated:

Wisconsin Department of Transportation Project:

ID 3210-00-75: CTH S Reconstruction/Expansion, CTH H to Brumback Boulevard, – Spring 2020 through 2021 construction season.

8. Information to Bidders, U.S. Army Corps of Engineers Section 404 Permit.

Kenosha County has applied for a U.S. Army Corps of Engineers Section 404 permit. Comply with the requirements of the permit in addition to requirements of the special provisions. A copy of the permit will be available from the Kenosha County Department of Public Works, Highway Division by contacting Clement Abongwa, Highway Commissioner, at 262-653-1870 or Clement.Abongwa@kenoshacounty.org.

9. Environmental Protection, Aquatic Exotic Species Control.

Exotic invasive organisms such as VHS, zebra mussels, purple loosestrife, and Eurasian water milfoil are becoming more prolific in Wisconsin and pose adverse effects to waters of the state. Wisconsin State Statutes 30.07, "Transportation of Aquatic Plants and Animals; Placement of Objects in Navigable Waters", details the state law that requires the removal of aquatic plants and zebra mussels each time equipment is put into state waters.

At construction sites that involve navigable water or wetlands, use the follow cleaning procedures to minimize the chance of exotic invasive species infestation. Use these procedures for all equipment that comes in contact with waters of the state and/or infested water or potentially infested water in other states.

Ensure that all equipment that has been in contact with waters of the state, or with infested or potentially infested waters, has been decontaminated for aquatic plant materials and zebra mussels before being used in other waters of the state. Before using equipment on this project, thoroughly disinfect all

equipment that has come into contact with potentially infested waters. Guidelines from the Wisconsin Department of Natural Resources for disinfection are available at:

http://dnr.wi.gov/topic/invasives/disinfection.html

Use the following inspection and removal procedures:

1. Before leaving the contaminated site, wash machinery and ensure that the machinery is free of all soil and other substances that could possibly contain exotic invasive species;
2. Drain all water from boats, trailers, bilges, live wells, coolers, bait buckets, engine compartments, and any other area where water may be trapped;
3. Inspect boat hulls, propellers, trailers and other surfaces. Scrape off any attached mussels, remove any aquatic plant materials (fragments, stems, leaves, seeds, or roots), and dispose of removed mussels and plant materials in a garbage can before leaving the area or invested waters; and
4. Disinfect your boat, equipment and gear by either:
    4.1. Washing with ~212 F water (steam clean), or
    4.2. Drying thoroughly for five days after cleaning with soap and water and/or high pressure water, or
    4.3. Disinfecting with either 200 ppm (0.5 oz per gallon or 1 Tablespoon per gallon) Chlorine for 10-minute contact time or 1:100 solution (38 grams per gallon) of Virkon Aquatic for 20- to 30-minute contact time. Note: Virkon is not registered to kill zebra mussel veligers nor invertebrates like spiny water flea. Therefore this disinfect should be used in conjunction with a hot water (>104º F) application.

Complete the inspection and removal procedure before equipment is brought to the project site and before the equipment leaves the project site.

stp-107-055 (20130615)

10. Information to Bidders, Storm Water General Construction Discharge Permit.

Kenosha County has applied for coverage through the Wisconsin Department of Natural Resources to discharge storm water associated with land disturbing construction activities of this contract under the Storm Water Notice of Intent (Reference No. WI-S067831-5). For status of permit coverage, contact Craig Webster, Wisconsin Department of Natural Resources Transportation Liaison at 262-574-2141 or craig.webster@wiconsin.gov. Post the permit in a conspicuous place at the construction site. Submit a Notice of Termination to the DNR within 45 days after the construction site has undergone final stabilization (uniform perennial vegetative cover has been established with a density of at least 70% over areas requiring permanent stabilization measures), temporary erosion control measures have been removed, and all land disturbing construction activities that required coverage under this permit have ceased.

11. Construction Over or Adjacent to Navigable Waters.

The Kilbourn Road Ditch is classified as a state navigable waterway under standard spec 107.19.

The stormwater conveyance channel that crosses existing CTH S near Sta. 95+25 is classified as a state navigable waterway under standard spec 107.19.

stp-107-060 (20171130)

12. Erosion Control.

The contractor shall prepare and submit an erosion control implementation plan (ECIP) for the project including borrow sites, material disposal sites, dust control, and dewatering according to Chapter TRANS 401 requirements. The ECIP shall supplement information shown on the plans and shall not reproduce it. The ECIP shall identify how the contractor intends to implement the project's erosion control plan, including measures to accommodate the Winter Shutdown as shown on the plans and for erosion control maintenance during the Winter Shutdown. A staged ECIP may be required for this project as new areas of the project are disturbed. ECIP amendments shall be needed prior to the Winter Shutdown and spring startup. A 14-day review period shall be allowed for each ECIP amendment. Provide the approved ECIP amendment to the engineer prior to winter shutdown and spring startup.

Provide the ECIP fourteen (14) calendar days prior to the pre-construction conference. Provide one (1) copy of the ECIP to Kenosha County and one (1) copy of the ECIP to the WDNR Liaison (Craig Webster, 262-574-2141 or craig.webster@wi.gov). Pursue operations in a timely and diligent manner, continuing all construction operations methodically from the initial removals and topsoil stripping operations through the subsequent grading, paving, and re-topsoiling to minimize the period of exposure to possible erosion. Do not implement the ECIP until it has been approved by the DNR and Kenosha County.

Complete final restoration in the following phases (at a minimum) as construction progresses, including sub-stages as shown on the traffic control plans:

Work Phase	**Location**
96th Avenue Connector	Sta. 611+00 to Sta. 615+50
96th Avenue Cul-de-sac	
100th Avenue	Sta. 501+00 to Sta. 503+50
102nd Avenue	Sta. 401+00 to Sta. 403+50
Stage 1 - WB CTH S	Sta. 27+25 to Sta. 41+50
	Sta. 41+50 to Sta. 54+00
	Sta. 54+00 to Sta. 65+55
	Sta. 65+55 to Sta. 78+00
	Sta. 78+00 to Sta. 87+00
	Sta. 87+00 to Sta. 96+25
	Sta. 96+25 to Sta. 113+00
Stage 2 - EB CTH S	Sta. 27+25 to Sta. 41+50
	Sta. 41+50 to Sta. 54+00
	Sta. 54+00 to Sta. 65+55
	Sta. 65+55 to Sta. 78+00
	Sta. 78+00 to Sta. 87+00
	Sta. 87+00 to Sta. 96+25
	Sta. 96+25 to Sta. 113+00
Stage 3	CTH S Median

Final restoration or temporary stabilization shall be in place and approved by the engineer prior to advancing construction operations to the next stage.

The ECIP shall include temporary erosion control devices to be implemented prior to or in conjunction with clearing and grubbing operations. Temporary seed and mulch cleared and grubbed areas within 48 hours of disturbance. Perform clearing and grubbing in stages as shown in the plans.

Re-topsoil graded areas, as designated by the engineer, immediately after grading is completed within those areas. Seed, fertilize, and mulch/erosion mat top-soiled areas, as designated by the engineer, within five (5) calendar days after placement of topsoil. If graded areas are left exposed for more than seven (7) calendar days, seed those areas with temporary seed within 72-hours of disturbance.

Permanently protect or restore all disturbed stream banks, wetland areas, and all disturbed areas within 100-feet of navigable waterways as shown on the plans or implement temporary erosion control devices within 24-hours of disturbance.

When performing roadway cleaning operations, the contractor shall use equipment having vacuum or water spray mechanism to eliminate the dispersion of dust. If vacuum equipment is employed, it shall have suitable self-contained particulate collectors to prevent discharge from the collection bin into the atmosphere.

Stockpile excess material or spoils on upland areas away from wetlands, floodplains and waterways. Stockpiled soil shall be protected against erosion. Temporarily stabilize on-site stockpiles and windrowed material with temporary seed and mulch within 72 hours of creating the stockpile or windrow.

Do not pump water from the construction site to a storm water conveyance without the water first passing through a sediment trap or filter bag.

When engaging in roadway cleaning operations, use equipment having a vacuum mechanism to eliminate the dispersion of particulate matter into the atmosphere. Vacuum equipment must have suitable self-contained particulate collectors to prevent discharge from the collection bin into the atmosphere. Rotary or pick-up type sweeping equipment without vacuum capability shall not be used.

13. Maintaining Drainage.

Maintain drainage at and through worksite during construction conforming to standard specs 107.22, 204, 205 and 520.

Use existing storm sewers, existing culvert pipes, existing drainage channels, temporary culvert pipes, or temporary drainage channels to maintain existing surface and pipe drainage. Pumps may be required to drain the surface, pipe, and structure discharges during construction. Costs for furnishing, operating, and maintaining the pumps is considered incidental to the project.

Maintain stream flow along the stormwater conveyance channel that is considered a navigable waterway (see the Construction Over or Adjacent to Navigable Waters section of these special provisions) at all times during construction. Perform removal and construction of culvert pipes and storm sewer structures along this stormwater conveyance channel only during dry periods with no stormwater flow in the channel or pipes. Removal and construction of pipes within this navigable waterway may be allowed only if stormwater flow is by-passed around construction through temporary pipes, bypass pumping, or diversion channel as approved in the ECIP. Existing pipes that do not conflict with proposed pipe locations or other construction operations may be left in place to convey stormwater until finished pipes are complete, upon which time stormwater flow shall be directed to the finished pipes and the existing pipes removed.

Maintain drainage along the existing CTH S roadway during the winter shutdown to not allow water to back up into any open travel lane, which may require temporarily setting the proposed eastbound roadway median inlet/catch basin covers low enough to adequately accommodate drainage from the existing CTH S roadway. Do not construct the proposed eastbound median curb and gutter within 10-feet of either side of storm sewer structures that are set low to temporarily accommodate drainage during the winter shutdown. Construct temporary asphaltic curb to direct drainage towards the inlet/catch basin structures along the proposed CTH S eastbound median as necessary.

Dewatering (Mechanical Pumping) for Bypass Water (sediment-free) Operations

If dewatering bypass operations are required from one pipe structure to another downstream pipe structure or from the upstream to downstream end of a culvert and the bypass flow is not transporting sediments (sand, silt, and clay particles) from a tributary work site area, bypass pumping operations will be allowed provided that the DNR has been made aware of and approves operation. When pumping bypass flows, the discharge location will need to be stable and not produce erosion from the discharge velocity that would cause release of sediment downstream.

Dewatering (Mechanical Pumping) for treatment Water (sediment-laden) Operations

If dewatering operations require pumping of water containing sediments (sand, silt, and clay particles), the discharge will not be allowed to leave the work site or discharge to a storm water conveyance system without sediment removal treatment. Refer to article Erosion Control in these special provisions for additional requirements.

14. Public Convenience and Safety.

Revise standard spec 107.8(6) as follows:

Check for and comply with local ordinances governing the hours of operation of construction equipment. Do not operate motorized construction equipment from 10:00 PM until the following 7:00 AM, unless prior written approval is obtained from the engineer.

stp-107-001 (20060512)

15. Coordination with Businesses and Residents.

The contractor shall arrange and conduct a meeting between the contractor, the owner, affected residents, local officials and business people to discuss the project schedule of operations including vehicular and pedestrian access during construction operations. Hold the first meeting at least one week before the start of work under this contract and no further meetings will be required unless directed by the engineer. The contractor shall arrange for a suitable location for meetings that provides reasonable accommodation for public involvement. The owner will prepare and coordinate publication of the meeting notices and mailings for meetings. The contractor shall schedule meetings with at least 2 weeks prior notice to the engineer to allow for these notifications.

stp-108-060 (20141107)

16. Notice to Contractor – Contaminated Soils.

Kenosha County excavated soil contaminated with hazardous materials from two locations along the CTH S corridor in 2020 during building demolitions in preparation for the CTH S Phase 2 project. The two locations were at the following properties:

1. Parcel #4 (plat ID RD16-003), 9930 Burlington Rd, approx. Sta. 78+75'WB' to Sta. 79+50'WB', LT
2. Parcel #10 (plat ID RD16-003), 9720 Burlington Rd, approx. Sta. 88+00'EB' to Sta. 90+00'EB', RT

Removal of additional hazardous materials is not anticipated as part of this contract. If excavated soils suspect of containing hazardous materials are encountered during the project, stop work in that surrounding area and notify the engineer immediately. Kenosha County, along with their consultant, reserves the right to evaluate the necessity of further hazardous material removal.

17. Notice to Contractor – Subsurface Exploration.

Subsurface exploration boring logs completed along the project for the Geotechnical Engineer Services Report are available and can be obtained by contacting Clement Abongwa, Kenosha County Highway Commissioner, at 262-653-1870 or clement.abongwa@kenoshacounty.org.

18. Notice to Contractor – Airport Operating Restrictions.

The Kenosha Regional Airport (ENW) is located immediately adjacent to the project site. File a Notice of Proposed Construction or Alteration (form 7460-1) with the Federal Aviation Administration (FAA) a minimum of 45 days prior to construction.

https://oeaaa.faa.gov/oeaaa/external/portal.jsp

All construction equipment taller than 15 feet in height working adjacent to the airport must be marked with a 3' x 3' orange and white checkered flag and/or amber beacon.

For any objects/equipment taller than 50 feet in height, the Contractor shall coordinate with the City of Kenosha for any variances possibly needed due to construction equipment and/or operations potentially penetrating the local height limitation zoning ordinance.

The Contractor shall coordinate with the Wis Bureau of Aeronautics (Wendy Hottenstein, Airport Development Engineer – Project Manager, 608-261-6278, wendy.hottenstein@dot.wi.gov) and the Federal Aviation Administration for airspace review of any construction equipment or objects that penetrates a 100:1 slope from the nearest runway end as it may require the submittal of the FAA form 7460-1.

Any borrow sites and stormwater features within 5 miles of an airport that hold water for more than 48 hours after a storm event shall be coordinated with the Wis Bureau of Aeronautics to review for the potential of wildlife hazards to aircraft.

The Contractor shall not create any electrical or electronic interference with radio communications between air navigational or aviation communications. The Contractor shall not make it difficult for an

aircraft pilot to distinguish between airport lights of impair an aircraft pilot's visual perception to endanger the landing, taking off, or maneuvering of the aircraft.

19. QMP Base Aggregate Dense 1 1/4-Inch Compaction, Item 371.1000.S.

A Description

(1) This special provision describes modifying the compaction and density testing and documentation requirements of work done under the Base Aggregate Dense 1 1/4-Inch bid items. Conform to standard spec 305 as modified in this special provision and to the contract QMP Base Aggregate article.

(2) Provide and maintain a quality management program. A quality management program is defined as all activities, including process control, inspection, sampling and testing, and necessary adjustments in the process related to construction of dense graded base which meets all the requirements of this provision.

(3) Chapter 8 of the WisDOT construction and materials manual (CMM) provides additional detailed guidance for QMP work and describes sampling and testing procedures.

http://wisconsindot.gov/rdwy/cmm/cm-08-00toc.pdf

(4) This special provision applies to Base Aggregate Dense 1 1/4-Inch material placed: above at least 16 inches of subgrade improvement, 12 inches of subgrade improvement and geogrid or QMP subgrade provisions, between shoulder hinge points and lower than mainline pavement. Unless otherwise specified by the contract, all Base Aggregate Dense 1 1/4-Inch material placed on side roads, private and public entrances, individual ramps less than 1500 feet, passing lanes less than 1500 feet, tapers, turn lanes, and other undefined locations are exempt from the compaction and density requirement modifications and testing contained within this special provision.

B (Vacant)

C Construction

C.1 General

(1) The engineer shall approve the grade before placement of the base. Approval of the grade shall be in accordance with applicable provisions of the standard specifications.

Add the following to standard spec 305.3.2.2:

(3) For 1 1/4-Inch dense graded base composed of ≤20% reclaimed asphaltic pavement (RAP) or crushed concrete (RCA), as determined by classification of material (aggregate or RAP and/or RCA) and percentage by weight of each material type retained on the No. 4 Sieve, the contractor must determine the material target density in accordance with:

Method 1: Maximum dry density in accordance with AASHTO T-180, Method D, with correction for coarse particles and modified to require determination of Bulk Specific Gravity (Gm) in accordance with AASHTO T 85. Bulk Specific Gravities determined in accordance with standard spec 106.3.4.2.2 for aggregate source approval may be utilized.

(4) For 1 1/4-Inch dense graded base composed of >20% RAP or RCA, as determined by classification of material (aggregate or RAP and/or RCA) and percentage by weight of each material type retained on the No. 4 Sieve, the contractor may choose from the following options to determine the material target density:

Method 2: Maximum dry density as determined by AASHTO T-180, Method D, with correction for coarse particles, and modified to require determination of Bulk Specific Gravity (G_m) in accordance with AASHTO T 85.

Method 3: Maximum wet density as determined by AASHTO T-180, Method D, modified to define *Maximum Density* as the wet density in pounds per cubic foot of soil at optimum moisture content using Method D specified compaction, with correction for coarse particles, and modified to require determination of Bulk Specific Gravity (G_m) in accordance with AASHTO T 85.

Method 4: Average of 10 random control strip wet density measurements as described in section C.2.5.1.

(5) Compact the 1 1/4-Inch dense graded base to a minimum of 93.0% of the material target density for methods 1, 2 and 3. Compact 1 ¼-inch dense graded base to a minimum of 96% of the material target density for method 4. Ensure that adequate moisture is present during placement and compaction operations to prevent segregation and to help achieve compaction.

(6) Base Aggregate Dense 1 1/4-Inch will be accepted for compaction on a lot basis.

(7) Field density tests on materials using contractor elected target density methods 3 or 4 will not be considered for lot acceptance on the basis of compaction under the requirements of this provision until the moisture content of the in-place material is less than 2.0 percentage points above the maximum wet density optimum moisture or 2.0 percentage points of the average moisture content of the 10 density tests representing a control strip, respectively. Determine moisture content using AASHTO T255 as modified in CMM chapter 8 or a nuclear density gauge. If conducting AASHTO T255, sample materials after watering but before compaction.

C.2 Quality Management Program

C.2.1 Quality Control Plan

(1) Submit a comprehensive written quality control plan to the engineer no later than 10 business days before placement of material. Do not place any dense graded base before the engineer reviews and accepts the plan. Construct the project as the plan provides.

(2) Do not change the quality control plan without the engineer's review and acceptance. Update the plan with changes as they become effective. Provide a current copy of the plan to the engineer and post in the contractor's laboratory as changes are adopted. Ensure that the plan provides the following elements:

1. An organizational chart with names, telephone numbers, current certifications and/or titles, and roles and responsibilities of QC personnel.
2. The process used to disseminate QC information and corrective action efforts to the appropriate persons. Include a list of recipients, the communication process that will be used, and action time frames.
3. A list of source locations, section and quarter descriptions, for all aggregate materials requiring QC testing.
4. Descriptions of stockpiling and hauling methods.
5. An outline for resolving a process control problem. Include responsible personnel, required documentation, and appropriate communication steps.
6. Location of the QC laboratory, retained sample storage, and other documentation.
7. Lot layout and random test location plan.
8. A description of placement methods and operations. Including, but not limited to: staging, construction of an initial working platform, lift thicknesses, and equipment.

C.2.1 Pre-Placement Meeting

A minimum of two weeks before placement of Base Aggregate Dense 1 1/4-Inch material, hold a pre-placement meeting at a mutually agreed upon time and location. Present the Quality Control Plan at the meeting. Attendance at the pre-placement meeting is mandatory for the project superintendent, quality control manager, project inspection and testing staff, all appropriate contractor personnel involved in the sampling, testing, and quality control including subcontractors, and the engineer or designated representatives.

C.2.2 Personnel

(1) Perform the quality control sampling, testing, and documentation required under this provision using technicians certified by WisDOT's Highway Technician Certification Program (HTCP). Have a HTCP Nuclear Density Technician I, or ACT certified technician, perform field density and field moisture content testing. Adhere to the minimum required certifications for aggregate testing per part 7 of the standard specification. AASHTO T180 proctor testing requires a minimum certification level of AGGTEC-1.

(2) If an ACT is performing sampling or testing, a certified technician must coordinate and take responsibility for the work an ACT performs. Have a certified technician ensure that all sampling and testing is

performed correctly, analyze test results, and post resulting data. No more than one ACT can work under a single certified technician.

C.2.3 Equipment

(1) Furnish the necessary equipment and supplies for performing quality control testing. Ensure that all testing equipment conforms to the equipment specifications applicable to the required testing methods. The engineer may inspect the measuring and testing devices to confirm both calibration and condition. Calibrate all testing equipment according to the CMM and maintain a calibration record at the laboratory.

(2) Furnish nuclear gauges from WisDOT's approved product list at:

http://wisconsindot.gov/Pages/doing-bus/eng-consultants/cnslt-rsrces/tools/appr-prod/default.aspx

(3) Ensure that the nuclear gauge manufacturer or an approved calibration service calibrates the gauge the same calendar year it is used on the project. Retain a copy of the calibration certificate with the gauge.

(4) For all target density methods, conform to AASHTO T310 and CMM 8-15 for wet density testing and gauge monitoring methods.

(5) For the specified target density determined using method 1 in section C.1, compute the dry densities for the compacted dense graded base, composed of ≤20% RAP or RCA, according to AASHTO T310.

(6) For contractor elected target density method 2 in section C.1, compute dry densities of dense graded base composed of >20% RAP or RCA using a moisture correction factor and the nuclear wet density value. Determine the moisture correction value, for each Proctor produced under the requirements of C.2.5, using the moisture bias as shown in CMM 8.15.12.1 and 8.15.12.2, except the one-point Proctor tests of the 5 random tests is not required. Conduct a moisture bias test for every 7500 feet of Base Aggregate Dense 1 1/4-Inch placed. Determine natural moistures in the laboratory.

(7) Perform nuclear gauge measurements using gamma radiation in the backscatter or direct transmission position. Backscatter may be used only if the material being tested cannot reliably maintain an undistorted direct transmission test hole. Direct transmission tests must be performed at the greatest possible probe depth of 2 inches, 4 inches, or 6 inches, but not to exceed the depth of the compacted layer being tested. Perform each test for at least one minute of nuclear gauge count time.

C.2.5 Contractor Testing

(1) Perform compaction testing on the mainline dense graded base material, as defined by A.(4). Perform the quality control sampling, testing, and documentation required under this provision using HTCP certified technicians as required in C.2.3. Conform to CMM 8-15 for testing and gauge monitoring methods.

(2) Select test sites randomly using ASTM Method D3665. Random numbers may be determined using an electronic random number generator. Guidance for determining test locations can be found in section 8-30.9 of the Construction and Materials Manual (CMM). Test locations must be kept a minimum of 3 feet from the unsupported edge of dense graded base layers.

(3) When a density target is determined in accordance methods 3 or 4 in section C.1, conduct density testing on same date of final compaction.

C.2.5.1 Contractor Required Quality Control (QC) Testing

(1) Conduct testing at a minimum frequency of one test per lot. A lot is 1500 feet for each layer with a maximum width of 18 feet and minimum lift thickness of 2" of Base Aggregate Dense 1 1/4-Inch material placed. Layer widths exceeding 18 feet are divided into equal lots. Each lot of compacted Base Aggregate Dense 1 1/4-Inch material, as defined by A.(4), will be accepted when the lot field density meets the required minimum density. Lots that don't achieve density requirements must be addressed and approved in accordance with C.2.7.

(2) Add separate lots for passing lanes and individual ramps greater than 1500 feet.

(3) Combine partial lots less than 750 feet with the previous lot. Partial lots greater than or equal to 750 feet are standalone lots.

(4) Notify the engineer, if a lot field density test falls below the required minimum value. Document and perform corrective actions in accordance with C.2.7. Deliver documentation of all compaction testing results to the engineer at the time of testing.

C.2.5.1.1 Target Density Determination

C.2.4.1.1.1 Maximum Wet and/or Dry Density Methods

(1) For contractor elected target density methods 2 and 3 in section C.1, and contractually specified target density method 1 in section C.1; perform one gradation and 5-point Proctor test before placement of 1 ¼-Inch dense graded base. Perform additional gradations every 3000 tons in accordance with standard spec 305 and 730. If sampling requirements are identical, samples/testing performed for the QMP Base Aggregate specification may be used to fulfill the gradation testing requirements of this specification.

(2) Perform additional 5-point Proctor tests, at a minimum, when:

1. The four point moving average gradation on any one sieve differs from the original gradation test result for that sieve, by more than 10 percentage points. The original gradation test is defined as the gradation of the material used to create a 5-point Proctor. Each 5-point Proctor test will remain valid for any material with gradation for all sieves within 10.0 percentage points of that Proctor's original gradation test.
2. The source of base aggregate changes.
3. Percent target density exceeds 103.0% on two consecutive density tests.

(3) Provide Proctor test results to the engineer within two business days of sampling. Provide gradation test results to the engineer within one business day of sampling.

(4) Split each contractor QC Proctor sample and identify it according to CMM 8-30. Deliver the split to the engineer within one business day for County QV Proctor testing.

(5) Split each non-Proctor contractor QC sample and identify it according to CMM 8-30. Retain the split for 7 calendar days in a dry, protected location. If requested for County comparison testing, deliver the split to the engineer within one business day.

C.2.5.1.1.2 Density Control Strip Method

(1) For contractor elected target density method 4 in section C.1, construct a control strip for each layer of placement to identify the target wet density for the base aggregate dense material. The control strip construction and density testing will occur under the direct observation and/or assistance of the County QV personnel. For blended material, reprocessed material and crushed concrete, perform additional gradations every 3000 tons in accordance with standard spec 305 and 730. If sampling frequencies are identical, samples/testing performed for the QMP Base Aggregate specification may be used to fulfill the gradation testing requirements of this specification.

(2) Unless the engineer approves otherwise, construct control strips to a minimum dimension of 300 feet long and one full lane width.

(3) Completed control strips may remain in-place to be incorporated into the final roadway cross-section.

(4) Construct additional control strips, at a minimum, when:

1. The source of base aggregate changes.
2. The four point moving average percentage of blended recycled materials, from classification of material retained on the No. 4 sieve in the original gradation test, differs by more than 10 percentage points. The original gradation test is defined as the gradation of the material used to construct the control strip.
3. The layer thickness changes more than 2.0 inches.
4. The percent target density exceeds 103.0% on two consecutive density measurements.

(5) Construct control strips using equipment and methods representative of the operations to be used to place and compact the remaining 1 1/4–Inch Base Aggregate Dense material. Wet the base, as mutually agreed upon by the contractor and engineer, to obtain and/or maintain adequate moisture content to ensure proper compaction. Discontinue water placement if the base begins to exhibit signs of saturation or instability.

(6) After compacting the control strip with a minimum of 2 passes, mark and take density measurements at 3 random locations. Subsequent density measurements will be taken at the same 3 locations. Test locations must be kept a minimum of 3 feet from the unsupported edge of dense graded base layers.

(7) After each subsequent pass of compaction equipment over the entirety of the control strip, take wet density measurements at the 3 marked locations. Continue compacting and testing until the increase in wet density measurements are less than 2.0 lb/ft^3, or the density measurements begin to decrease.

(8) Upon completion of control strip compaction, take 10 randomly located wet density measurements within the limits of the control strip. The final measurements recorded at the 3 locations under article C.2.4.1.1.2 may be included as 3 of the 10 measurements. Average the ten measurements to obtain the control strip target density and target moisture for use in contractor elected method 4 in section C.1. Test locations must be kept a minimum of 3 feet from the unsupported edge of dense graded base layers.

C.2.6 Department (Kenosha County) Testing

C.2.6.1 General

(1) The department will conduct verification testing to validate the quality of the product and independent assurance testing to evaluate the sampling and testing. The department will provide the contractor with a listing of names and telephone numbers of all QV and IA personnel for the project, and provide test results to the contractor within two business days after the department obtains the sample.

(2) When a density target is determined in accordance methods 3 and 4 in section C.1, conduct density testing on same date of final compaction.

C.2.6.2 Quality Verification (QV) Testing

(1) The department will have an HTCP technician, or ACT working under a certified technician, perform QV sampling and testing. Department verification testing personnel must meet the same certification level requirements specified in C.2.3 for contractor testing personnel for each test result being verified. The department will notify the contractor before sampling so the contractor can observe QV sampling.

(2) The department will conduct QV tests at the minimum frequency of 20% of the required gradation, density and Proctor contractor tests.

(3) The department will utilize contractor's QC Proctor results for determination of the material target density. The department will verify QC Proctor values by testing QC Proctor split sample. The department will use QC Proctor value as a target density if the QC and QV Proctor test results meet the tolerance requirements specified in section C.2.6.2(7).

(4) The department will locate gradation and nuclear density test samples, at locations independent of the contractor's QC work, collecting one sample at each QV location. Sampling for gradation may be done independently of nuclear density tests, before watering and before compacting. The department will split each QV sample, test half for QV, and retain the remaining half for 10 calendar days.

(5) The department will conduct QV tests in a separate laboratory and with separate equipment from the contractor's QC tests. The department will use the same methods specified for QC testing.

(6) The department will utilize control strip target density testing results in lieu of QV Proctor sampling and testing when the contractor elected target density method 4 in section C.1 is used.

(7) The department will assess QV results by comparing to the appropriate specification limits. If QV test results conform to this special provision, the department will take no further action. If QV test results are nonconforming, take corrective actions in accordance with C.2.7 until the requirements of this special provision are met. Differing QC and QV nuclear density values of more than 2.0 pcf will be investigated and resolved. Differing QC and QV Proctor values of more than 3.0 pcf will be investigated and resolved.

C.2.6.3 Independent Assurance (IA)

(1) Independent assurance is unbiased testing the department performs to evaluate the department's QV and the contractor's QC sampling and testing, including personnel qualifications, procedures, and equipment. The department will perform an IA review according to the department's independent assurance program. That review may include one or more of the following:

1. Split sample testing.
2. Proficiency sample testing.
3. Witnessing sampling and testing.
4. Test equipment calibration checks.
5. Requesting that testing personnel perform additional sampling and testing.

(2) If the department identifies a deficiency, and after further investigation confirms it, correct that deficiency. If the contractor does not correct or fails to cooperate in resolving identified deficiencies, the engineer may suspend placement until action is taken. Resolve disputes as specified in C.2.6.4.

C.2.6.4 Dispute Resolution

(1) The engineer and contractor should make every effort to avoid conflict. If a dispute between some aspect of the contractor's and the engineer's testing program does occur, seek a solution mutually agreeable to the project personnel. The department and contractor shall review the data, examine data reduction and analysis methods, evaluate sampling and testing methods/procedures, and perform additional testing. Use ASTM E 178 to evaluate potential statistically outlying data.

(2) Production test results, and results from other process control testing, may be considered when resolving a dispute.

(3) If project personnel cannot resolve a dispute, and the dispute affects payment or could result in incorporating non-conforming product or work, the department will use third party testing to resolve the dispute. The department's central office laboratory, or a mutually agreed on independent testing laboratory, will provide this testing. The engineer and contractor will abide by the results of the third party tests. The party in error will pay service charges incurred for testing by an independent laboratory. The department may use third party test results to evaluate the quality of questionable materials and determine the appropriate payment. The department may reject material or otherwise determine the final disposition of nonconforming material as specified in standard spec 106.5.

C.2.7 Corrective Action

(1) Lots not achieving the minimum density requirements may be addressed and accepted for compaction in accordance with the requirements of this section. Unless directed by the engineer, corrective actions taken to address an unacceptable lot must be applied to the entire lot corresponding to the non-conforming test.

(2) Investigate the moisture content of material in an unacceptable lot. Moisture content testing/samples collected under the QC and/or QV testing articles of this specification may be used to complete this investigation. Obtain moisture content readings in accordance with ASTM D 6938. For material composed of >20% RAP or RCA, correct the moisture content with the moisture correction value using the moisture bias, as shown in CMM 8.15.12.1 and 8.15.12.2, except the one-point Proctor tests of the 5 random tests is not required.

(3) Lots with moisture contents within 2.0 percentage points of optimum moisture for target density methods 1, 2 and 3 in section C.1, or within 2.0 percentage points of the target moisture content for target density method 4 in section C.1, and exhibiting no signs of deflection when subjected to loading by the heaviest roller used in the placement and compaction operations, shall be compacted a minimum of one more pass using equipment and methods representative of the operations used to place and compact the Base Aggregate Dense 1 1/4–Inch, and density tested at the same location (station and offset) as the failing QC and/or QV density tests. If the change in density exceeds 2.0 lb/ft^3 continue subsequent compactive efforts and density testing on that lot, at no additional cost to the department. If the change in density is less than or equal to 2.0 lb/ft^3, the lot is accepted as satisfying the compaction requirements of this provision.

(4) Lots with moisture contents within 2.0 percentage points of optimum moisture for target density methods 1, 2, or 3 in section C.1, or within 2.0 percentage points of the target moisture content for target density method 4 in section C.1, and exhibiting signs of deflection when subjected to loading by the heaviest roller used in the placement and compaction operations, will be reviewed by the engineer. The engineer may request subgrade improvement methods, such as excavation below subgrade (EBS), installation of geotextile fabrics, installation of breaker run material, or others to be completed, or may request an additional pass of compactive effort using equipment and methods representative of the operations used to place and compact the base aggregate dense and density test.

1. If, after an additional pass, the change in density at the same location (station and offset) as the failing QC and/or QV density tests exceeds 2.0 lb/ft^3 in a lot continue subsequent compactive efforts and density testing on that lot. If the change in density at the same location (station and offset) as the failing QC and/or QV density tests is less than or equal to 2.0 lb/ft^3, and subgrade improvement methods are not requested by the engineer, the lot is accepted as satisfying the compaction requirements of this provision.
2. If subgrade improvement methods are requested by the engineer, upon completion, including compaction of the restored base material, conduct a density test within the improved subgrade limits. This density test result will replace the prior field density value. If the lot field density equals or exceeds the minimum density requirement defined in section C.1, the lot is accepted as satisfying the compaction requirements of this provision. If the lot field density fails to achieve the minimum density requirement defined in section C.1, compact the lot a minimum of one more pass using equipment and methods representative of the operations used to place and compact the base aggregate dense; and density test at the same location (station and offset) as the failing QC and/or QV density tests. If the change in density exceeds 2.0 lb/ft^3 continue subsequent compactive efforts and density testing on that lot, at no additional cost to the County. If the change in density is less than or equal to 2.0 lb/ft^3, the lot is accepted as satisfying the compaction requirements of this provision.

(5) Unacceptable lots, with moisture contents in excess of 2.0 percentage points above or below optimum moisture for target density methods 1, 2 or 3 in section C.1 ; or in excess of 2.0 percentage points above or below the target moisture content for target density method 4 in section C.1; shall receive contractor performed and documented corrective action; including additional density testing.

(6) Density tests completed subsequent to any corrective action will replace previous field density test results for that lot. Continue corrective actions until the minimum density requirement is achieved or an alternate compaction acceptance criteria is met in accordance with this section.

(7) Field moisture contents of materials tested using contractor elected target density methods 3 or 4 in section C.1 cannot exceed 2.0 percentage points of the optimum moisture content or 2.0 percentage points of the target moisture content, respectively. Density tests on materials using contractor elected target density methods 3 or 4 in section C.1 will not be considered for lot compaction acceptance until the moisture content of the corresponding density test of the in-place material is less than 2.0 percentage points above of the optimum moisture content or 2.0 percentage points of the target moisture content, respectively.

D Measurement

(1) The owner will measure the QMP Base Aggregate Dense 1 1/4-Inch Compaction bid item by each lot, acceptably completed per C.2.5.1.

E Payment

(1) The owner will pay for the measured quantities at the contract unit price under the following bid item:

ITEM NUMBER	DESCRIPTION	UNIT
371.1000.S	QMP Base Aggregate Dense 1 1/4-Inch Compaction	EACH

(2) Payment is full compensation for performing compaction testing; for sampling and laboratory testing; and for developing, completing, and documenting the compaction quality management program. The owner will pay separately for providing aggregate under the Base Aggregate Dense 1 1/4-Inch bid item.

(3) The owner will pay for additional tests directed by the engineer. One engineer directed test is equal to one acceptably completed lot of the QMP Base Aggregate Dense 1 1/4 -Inch Compaction bid item. The owner will not pay for additional corrective action tests required due to unacceptable material.

20. QMP HMA Pavement Nuclear Density.

A Description

Replace standard spec 460.3.3.2 (1) and standard spec 460.3.3.2 (4) with the following:

(1) This special provision describes density testing of in-place HMA pavement with the use of nuclear density gauges. Conform to standard spec 460 except as modified in this special provision.

(2) Provide and maintain a quality control program defined as all activities and documentation of the following:

1. Selection of test sites.
2. Testing.
3. Necessary adjustments in the process.
4. Process control inspection.

(3) Chapter 8 of WisDOT's construction and materials manual (CMM) provides additional detailed guidance for QMP work and describes required procedures.

http://wisconsindot.gov/rdwy/cmm/cm-08-00toc.pdf

B Materials

B.1 Personnel

(1) Nuclear gauge owners and personnel using nuclear gauges shall comply with WisDOT requirements according to 460.3.3 and CMM 8-15.

B.2 Testing

(1) Conform to ASTM D2950 and CMM 8.15 for density testing and gauge monitoring methods. Conform to CMM 8-15.10.4 for test duration and gauge placement.

B.3 Equipment

B.3.1 General

(1) Furnish nuclear gauges according to CMM 8-15.2.

(2) Furnish nuclear gauges from WisDOT's approved product list at

http://wisconsindot.gov/Pages/doing-bus/eng-consultants/cnslt-rsrces/tools/appr-prod/default.aspx

B.3.2 Comparison of Nuclear Gauges

B.3.2.1 Comparison of QC and QV Nuclear Gauges

(1) Compare QC and QV nuclear gauges according to CMM 8-15.7.

B.3.2.2 Comparison Monitoring

(1) Conduct reference site monitoring for both QC and QV gauges according to CMM 8-15.

B.4 Quality Control Testing and Documentation

B.4.1 Lot and Sublot Requirements

B.4.1.1 Mainline Traffic Lanes, Shoulders, and Appurtenances

(1) Divide the pavement into lots and sublots for nuclear density testing according to CMM 8-15.10.2.

(2) Determine required number of tests according to CMM 8-15.10.2.1.

(3) Determine random testing locations according to CMM 8-15.10.3.

B.4.1.2 Side Roads, Crossovers, Turn Lanes, Ramps, and Roundabouts

(1) Divide the pavement into lots and sublots for nuclear density testing according to CMM 8-15.10.2.

(2) Determine required number of tests according to CMM 8-15.10.2.2.

(3) Determine random testing locations according to CMM 8-15.10.3.

B.4.2 Pavement Density Determination

B.4.2.1 Mainline Traffic Lanes and Appurtenances

(1) Calculate the average sublot densities using the individual test results in each sublot.

(2) If all sublot averages are no more than one percent below the target density, calculate the daily lot density by averaging the results of each random QC test taken on that day's material.

(3) If any sublot average is more than one percent below the target density, do not include the individual test results from that sublot when computing the lot average density and remove that sublot's tonnage from the daily quantity for incentive. The tonnage from any such sublot is subject to disincentive pay as specified in standard spec 460.5.2.2.

B.4.2.2 Mainline Shoulders

B.4.2.2.1 Width Greater Than 5 Feet

(1) Determine the pavement density as specified in B.4.2.1.

B.4.2.2.2 Width of 5 Feet or Less

(1) If all sublot test results are no more than 3.0 percent below the minimum target density, calculate the daily lot density by averaging all individual test results for the day.

(2) If a sublot test result is more than 3.0 percent below the target density, the engineer may require the unacceptable material to be removed and replaced with acceptable material or allow the nonconforming material to remain in place with a 50 percent pay reduction. Determine the limits of the unacceptable material according to B.4.3.

B.4.2.3 Side Roads, Crossovers, Turn Lanes, Ramps, and Roundabouts

(1) Determine the pavement density as specified in B.4.2.1.

B.4.2.4 Documentation

(1) Document QC density test data as specified in CMM 8.15. Provide the engineer with the data for each lot within 24 hours of completing the QC testing for the lot.

B.4.3 Corrective Action

(1) Notify the engineer immediately when an individual test is more than 3.0 percent below the specified minimum in standard spec 460.3.3.1. Investigate and determine the cause of the unacceptable test result.

(2) The engineer may require unacceptable material specified in B.4.3(1) to be removed and replaced with acceptable material or allow the nonconforming material to remain in place with a 50 percent pay reduction. Determine limits of the unacceptable area by measuring density of the layer at 50-foot increments both ahead and behind the point of unacceptable density and at the same offset as the original test site. Continue testing at 50-foot increments until a point of acceptable density is found as specified in standard spec 460.5.2.2(1). Removal and replacement of material may be required if extended testing is in a previously accepted sublot. Testing in a previously accepted sublot will not be used to recalculate a new lot density.

(3) Compute unacceptable pavement area using the product of the longitudinal limits of the unacceptable density and the full sublot width within the traffic lanes or shoulders.

(4) Retesting and acceptance of replaced pavement will be as specified in standard spec 105.3.

(5) Tests indicating density more than 3.0 percent below the specified minimum, and further tests taken to determine the limits of unacceptable area, are excluded from the computations of the sublot and lot densities.

(6) If 2 consecutive sublot averages within the same paving pass and same target density are more than one percent below the specified target density, notify the engineer and take necessary corrective action. Document the locations of such sublots and the corrective action that was taken.

B.5 Department (Kenosha County) Testing

B.5.1 Verification Testing

(1) The department will have a HTCP certified technician, or ACT working under a certified technician, perform verification testing. The department will test randomly at locations independent of the contractor's QC work. The department will perform verification testing at a minimum frequency of 10 percent of the sublots and a minimum of one sublot per mix design. The sublots selected will be within the active work zone. The contractor will supply the necessary traffic control for the department's testing activities.

(2) The QV tester will test each selected sublot using the same testing requirements and frequencies as the QC tester.

(3) If the verification sublot average is not more than one percent below the specified minimum target density, use the QC tests for acceptance.

(4) If the verification sublot average is more than one percent below the specified target density, compare the QC and QV sublot averages. If the QV sublot average is within 1.0 lb/ft^3 of the QC sublot average, use the QC tests for acceptance.

(5) If the first QV/QC sublot average comparison shows a difference of more than 1.0 lb/ft^3 each tester will perform an additional set of tests within that sublot. Combine the additional tests with the original set of tests to compute a new sublot average for each tester. If the new QV and QC sublot averages compare to within 1.0 lb/ft^3, use the original QC tests for acceptance.

(6) If the QV and QC sublot averages differ by more than 1.0 lb/ft^3 after a second set of tests, resolve the difference with dispute resolution specified in B.6. The engineer will notify the contractor immediately when density deficiencies or testing precision exceeding the allowable differences are observed.

B.5.2 Independent Assurance Testing

(1) Independent assurance is unbiased testing the department performs to evaluate the department's verification and the contractor's QC sampling and testing including personnel qualifications, procedures, and equipment. The department will perform the independent assurance review according to the department's independent assurance program.

B.6 Dispute Resolution

(1) The testers may perform investigation in the work zone by analyzing the testing, calculation, and documentation procedures. The testers may perform gauge comparison according to B.3.2.1.

(2) The testers may use comparison monitoring according to B.3.2.2 to determine if one of the gauges is out of tolerance. If a gauge is found to be out of tolerance with its reference value, remove the gauge from the project and use the other gauge's test results for acceptance.

(3) If the testing discrepancy cannot be identified, the contractor may elect to accept the QV sublot density test results or retesting of the sublot in dispute within 48 hours of paving. Traffic control costs will be split between the department and the contractor.

(4) If investigation finds that both gauges are in error, the contractor and engineer will reach a decision on resolution through mutual agreement.

B.7 Acceptance

(1) The owner will not accept QMP HMA Pavement Nuclear Density if a non-compared gauge is used for contractor QC tests.

C (Vacant)

D (Vacant)

E Payment

E.1 QMP Testing

(1) Costs for all sampling, testing, and documentation required under this special provision are incidental to the work. If the contractor fails to perform the work required under this special provision, the owner may

reduce the contractor's pay. The owner will administer pay reduction under the Non-performance of QMP administrative item.

E.2 Disincentive for HMA Pavement Density

(1) The owner will administer density disincentives as specified in standard spec 460.5.2.2.

E.3 Incentive for HMA Pavement Density

(1) The owner will administer density incentives as specified in standard spec 460.5.2.3.

stp-460-020 (20181119)

21. Bar Steel Reinforcement HS Stainless Structures, Item 505.0800.S.

A Description

This special provision describes furnishing and placing stainless steel reinforcing bars and associated stainless steel bar couplers.

Conform to standard spec 505 as modified in this special provision.

B Materials

B.1 General

Furnish stainless steel reinforcing bars conforming to ASTM A955 and to one of the following Unified Numbering System (UNS) designations: S31653, S31803, S32205, or S32304. Supply grade 60 bars, all of the same UNS designation. Conform to the chemical composition specified for the given UNS designation in ASTM A276 table 1.

Supply bars that are free of dirt, mill scale, oil, and debris by pickling to a bright or uniform light finish. The department may reject bars displaying rust/oxidation, questionable blemishes, or lack of a bright or uniform pickled surface.

Furnish chairs or continuous supports made of stainless steel or recycled plastic to support high-strength stainless bar steel reinforcement subject to the plastic chair restriction stated in standard spec 505.3.4(1).

Furnish couplers made from one of the UNS alloys allowed for bar steel.

Furnish tie wire made from one of the UNS alloys allowed for bar steel or from an engineer-approved plastic or nonmetallic material. Ensure that stainless steel tie wire is dead soft annealed.

B.2 Fabrication

Before fabrication, supply test results from an independent testing agency certifying that the reinforcement meets the requirements of Annex A1 of ASTM A955.

Bend bars conforming to standard spec 505.3.2 and according to ASTM A955. Bend and cut bars using equipment thoroughly cleaned or otherwise modified to prevent contamination from carbon steel or other contaminants. Use tools dedicated solely to working with stainless steel.

B.3 Control of Material

Identify reinforcement bars delivered to the project site with tags bearing the identification symbols used in the plans. Include the UNS designation, heat treat condition, heat number, grade corresponding to minimum yield strength level, and sufficient documentation to track each bar bundle to a mill test report.

Provide samples for department testing and acceptance according to CMM 8-50 Exhibit 1 requirements for concrete masonry reinforcement for uncoated bar steel.

Provide mill test reports for the project that do the following:

1. Verify that sampling and testing procedures and test results conform to ASTM A955, ASTM A276 table 1, and these contract requirements.
2. Include a chemical analysis with the UNS designation, heat lot identification, and the source of the metal.

3. Include tensile strength, yield strength, and elongation tests results conforming to ASTM A955 for each size furnished.
4. Certify that the bars have been pickled to a bright or uniform light finish.

C Construction

C.1 General

Ship, handle, store, and place the stainless steel reinforcing as follows:

1. Separate from regular reinforcement during shipping. Pad points of contact with steel chains or banding, or secure with non-metallic straps.
2. Store on wooden cribbing separated from regular reinforcement. Cover with tarpaulins if stored outside.
3. Handle with non-metallic slings.
4. Do not flame cut or weld. Protect from contamination when cutting, grinding, or welding other steel products above or near the stainless steel during construction.
5. Place on plastic or stainless steel bar chairs. If placing stainless steel chairs on steel beams, use chairs with plastic-coated feet.
6. Tie with stainless steel wire or an engineer-approved plastic or nonmetallic material.

Do not tie stainless steel reinforcing bars to, or allow contact with, uncoated reinforcing bars or galvanized steel. Maintain at least 1 inch clearance between stainless steel bars or dowels and uncoated or galvanized steel. Where 1 inch clearance is not possible, sleeve bars with a continuous polyethylene or nylon tube at least 1/8 inch thick extending at least 1 inch in each direction and bind with nylon or polypropylene cable ties. Sleeves are not required between stainless steel bars and shear studs. Stainless steel bars can be in direct contact with undamaged epoxy-coated bars.

Cut flush with the top flange or remove uncoated fasteners, anchors, lifting loops, or other protrusions into a bridge deck before casting the deck on prestressed concrete beams.

C.2 Splices

Splice as the plans show. Provide stainless steel couplers conforming to the minimum capacity, certification, proof testing, and written approval requirements of standard spec 550.3.3.4. The contractor may substitute stainless steel couplers for lap slices the plans show if the engineer approves in writing.

If increasing or altering the number or type of bar splices the plans show, provide revised plan sheets to the engineer showing the reinforcement layout, type, length, and location of revised bar splices and revised bar lengths. Obtain engineer approval for the location of new lap splices or substitution of mechanical bar couplers before fabrication. Ensure that new lap splices are at least as long as those the plans show.

D Measurement

The owner will measure Bar Steel Reinforcement HS Stainless Structures by the pound acceptably completed, computed from the nominal weights of corresponding sizes for carbon steel deformed bars in AASHTO M31 regardless of stainless steel alloy provided. The owner will not measure extra material used if the contractor alters the reinforcement layout as allowed under C.2, extra material for splices or couplers the plans do not show, or the weight of devices used to support or fasten the steel in position.

The owner will measure the Bar Couplers Stainless bid items as each individual coupler acceptably completed.

E Payment

The owner will pay for measured quantities at the contract unit price under the following bid item:

ITEM NUMBER	DESCRIPTION	UNIT
505.0800.S	Bar Steel Reinforcement HS Stainless Structures	LB

Payment for Bar Steel Reinforcement HS Stainless Structures is full compensation for furnishing and placing stainless steel reinforcing bars, including supports. Where the plans specify bar couplers, the owner will pay for the length of bars as detailed with no deduction or increase for installation of the coupler.

Payment for the Bar Couplers Stainless bid items is full compensation for providing couplers; including bar steel that is part of the coupler and not detailed in the plan; for threading reinforcing bars; for installing and coating the splice; and for supplying and testing 3 couplers.

22. Cover Plates Temporary, Item 611.8120.S.

A Description

This special provision describes providing and removing steel plates to cover and support asphaltic pavement and traffic loading at manholes, inlets and similar structures during milling and paving operations.

B Materials

Provide a 0.25 inch minimum thickness steel plate that extends to the outside edge of the existing masonry.

C (Vacant)

D Measurement

The County will measure Cover Plates Temporary as each individual unit acceptably completed.

E Payment

The County will pay for measured quantities at the contract unit price under the following bid item:

ITEM NUMBER	DESCRIPTION	UNIT
611.8120.S	Cover Plates Temporary	EACH

Payment is full compensation for furnishing, installing, and removing the cover plates.

The steel plates shall become the property of the contractor when no longer needed in the contract work.

stp-611-006 (20151210)

23. Pipe Grates, Item 611.9800.S.

A Description

This special provision describes providing pipe grates on the ends of pipes.

B Materials

Furnish steel conforming to the requirements of standard spec 506.2.2.1. Furnish steel pipe conforming to the requirements of standard spec 506.2.3.6.

Furnish pipe grates galvanized according to ASTM A123.

Furnish angles and brackets galvanized according to ASTM A123.

Furnish required hardware galvanized according to ASTM A153.

C Construction

Repair pipes, rods, angles and brackets on which the galvanized coating has been damaged according to the requirements of AASHTO M36M.

D Measurement

The owner will measure Pipe Grates in units of work, where one unit is one grate completed and accepted.

E Payment

The owner will pay for measured quantities at the contract unit price under the following bid item:

ITEM NUMBER	DESCRIPTION	UNIT
611.9800.S	Pipe Grates	EACH

Payment is full compensation for furnishing and installing all materials; and for drilling and connecting grates to pipes.

stp-611-010 (20030820)

24. Salvaged Rail, Item 614.0920; Salvaged Guardrail End Treatments, Item 614.0925.

Amend section 614.3.9 of the standard specifications to include the following:

Contact Glenn Fenske, Kenosha County Highways Superintendent, at (262) 857-1878 to arrange for Kenosha County to pick up the salvaged materials from the worksite.

25. Temporary Ditch Checks, Item 628.7504.

Replace section 628.3.14(2) of the standard specifications with the following:

Construct temporary ditch checks using a manufactured alternative to erosion bales from WisDOT's PAL. Erosion bales are not allowed for use as temporary ditch checks. Place temporary ditch checks across ditches at locations the plans show or as the engineer directs immediately after shaping the ditches or slopes. Excavate upstream sumps as the engineer directs.

Replace section 628.5.17(2) of the standard specifications with the following:

The County will not pay for installing ditch checks if constructed of erosion bales.

26. Removing Signs Type II, Item 638.2602.

Revised section 638.3.4 of the standard specifications and as follows:

(2) Aluminum type II signs and steel stringers are property of Kenosha County DPW. Return signs and stringers palletized for handling with a forklift. Contact Glenn Fenske, Kenosha County Highways Superintendent, at (262) 857-1878 at least five working days prior to delivery to make arrangements. Deliver the removed signs to the Kenosha County Public Works Facility at 19600 75th Street in Bristol, WI.

(3) Plywood type II and all type I signs are property of Kenosha County DPW. Return signs and stringers palletized for handling with a forklift. Contact Glenn Fenske, Kenosha County Highways Superintendent, at (262) 857-1878 at least five working days prior to delivery to make arrangements. Deliver the removed signs to the Kenosha County Public Works Facility at 19600 75th Street in Bristol, WI.

27. Nighttime Work Lighting-Stationary.

A Description

This special provision describes furnishing portable lighting as necessary to complete nighttime work. Nighttime operations consist of work specifically scheduled to occur after sunset and before sunrise.

B (Vacant)

C Construction

C.1 General

This provision shall apply when providing, maintaining, moving, and removing portable light towers and equipment-mounted lighting fixtures for nighttime stationary work operations, for the duration of nighttime work on the contract.

At least 14 days before the nighttime work, furnish a lighting plan to the engineer for review and acceptance. Address the following in the plan:

1. Layout, including location of portable lighting – lateral placement, height, and spacing. Clearly show on the layout the location of all lights necessary for every aspect of work to be done at night.
2. Specifications, brochures, and technical data of all lighting equipment to be used.
3. The details on how the luminaires will be attached.
4. Electrical power source information.
5. Details on the louvers, shields, or methods to be employed to reduce glare.
6. Lighting calculations. Provide illumination with average to minimum uniformity ratio of 5:1 or less throughout the work area.
7. Detail information on any other auxiliary equipment.

C.2 Portable Lighting

Provide portable lighting that is sturdy and free standing and does not require any guy wires, braces, or any other attachments. Furnish portable lighting capable of being moved as necessary to keep up with the construction project. Position the portable lighting and trailers to minimize the risk of being impacted by traffic on the roadway or by construction traffic or equipment. Provide lightning protection for the portable lighting. Portable lighting shall withstand up to 60 mph wind velocity.

If portable generators are used as a power source, furnish adequate power to operate all required lighting equipment without any interruption during the nighttime work. Provide wiring that is weatherproof and installed according to local, state, federal (NECA and OSHA) requirements. Equip all power sources with a ground-fault circuit interrupter to prevent electrical shock.

C.3 Light Level and Uniformity

Position (spacing and mounting height) the luminaires to provide illumination with an average to minimum uniformity ratio of 5:1 or less throughout the work area.

Illuminate the area as necessary to incorporate construction vehicles, equipment, and personnel activities.

C.4 Glare Control

Design, install, and operate all lighting supplied under these specifications to minimize or avoid glare that interferes with all traffic on the roadway or that causes annoyance or discomfort for properties adjoining the roadway. Locate, aim, and adjust the luminaires to provide the adequate level of illumination and the specified uniformity in the work area without the creation of objectionable glare.

Provide louvers, shields, or visors, as needed, to reduce any objectionable levels of glare. As a minimum, ensure the following requirements are met to avoid objectionable glare on the roadways open to traffic in either direction or for adjoining properties:

1. Aim tower-mounted luminaires, either parallel or perpendicular to the roadway, so as to minimize light aimed toward approaching traffic.
2. Aim all luminaires such that the center of beam axis is no greater than 60 degrees above vertical (straight down).

If lighting does not meet above-mentioned criteria, adjust the lighting within 24 hours.

C.5 Continuous Operation

Provide and have available sufficient fuel, spare lamps, generators, and qualified personnel to ensure that the lights will operate continuously during nighttime operation. In the event of any failure of the lighting system, discontinue the operation until the adequate level of illumination is restored. Move and remove lighting as necessary.

D (Vacant)

E Payment

Costs for furnishing a lighting plan, and for providing, maintaining, moving, and removing portable lighting, tower mounted lighting, and equipment-mounted lighting required under this special provision are incidental to the contract.

stp-643-010 (20100709)

28. Catch Basins Median 1 Grate, Item SPV.0060.01.

A Description

This special provision describes providing Catch Basins Median 1 Grate in accordance with section 611 of the standard specifications and as shown on the plans.

B Materials

Furnish materials in conformance with section 611.2 of the standard specifications. Furnish Catch Basins Median 1 Grate with integral sumps as shown on the plans.

C Construction

Comply with section 611.3 of the standard specifications.

D Measurement

The owner will measure Catch Basins Median 1 Grate as each individual unit acceptably completed.

E Payment

The owner will pay for measured quantities at the contract unit price under the following bid item:

ITEM NUMBER	DESCRIPTION	UNIT
SPV.0060.01	Catch Basins Median 1 Grate	EA

Payment is full compensation for providing materials, including masonry, conduit and sewer connections, steps and other fittings; for excavating, backfilling, disposing of surplus material, and for cleaning out and restoring the work site; except that the owner will pay for covers separately.

29. Field Office, Item SPV.0060.02.

A Description

This special provision describes furnishing a brick and mortar location field office, equipping, and maintaining the field office as required in the contract at the engineer-approved location conforming to standard spec 642 and as hereinafter provided.

B Materials

Provide Field Office conforming to standard spec 642.2.1.

Add the following to standard spec 642.2.1:

Provide a lease at the following property for the duration of the project to be used by Kenosha County and their selected engineering representatives: 9114 58th Place, Suite 300 (1,324 SF office space) in the Business Park of Kenosha. Contact the following individuals for more information to secure a lease of this property:

Sergio Chapa, Senior Managing Director, 847-980-7244, schapa@ngkf.com

Chelsea Couette, Business Development Associate, 414-274-2641, Chelsea.couette@zilber.com

Equip facility as specified in standard spec 642.2.2.1 except delete paragraph (1) and (4) and add the following:

1. Provide the field office with a minimum of three rooms each with a minimum of two exterior doors and air conditioning.
2. 5 suitable office desks with drawers and locks.
3. 5 ergonomically correct office chairs in working condition with at a minimum: 5-legged base with casters, seat adjustable from 15 to 22 inches from the floor with a seamless waterfall, rounded, front edge, and high backrest with no arms or adjustable arms.
4. 4 six foot folding tables.
5. 1 ten foot folding table.
6. 5 two-drawer file cabinets.
7. 3 four-shelf bookcases.
8. 20 folding chairs.

C Construction

Conform to standard spec 642.3.

D Measurement

The owner will measure Field Office as each field office acceptably completed.

E Payment

The owner will pay for measured quantities at the contract unit price under the following bid item:

ITEM NUMBER	DESCRIPTION	UNIT
SPV.0060.02	Field Office	EACH

Payment is full compensation for providing, equipping, securing, and maintaining the facility; for telecommunications equipment, installation, and service fees; and for providing bottled water, utilities, fuel, ventilation, and toilet facilities as required, either independently or jointly with the field laboratory, for the time specified in 642.3 of the standard specs.

The owner will pay for the cost of telecommunications usage fees incurred by owner staff.

30. Connect Drain Tile, Item SPV.0060.03.

A Description

This special provision describes connecting existing drain tiles to proposed structures or proposed storm sewer pipes.

B (Vacant)

C Construction

Identify drain tile invert elevations through Drain Tile Exploration. Connect the exposed drain tile with the appropriate coupling, concrete collar, or by means approved by the engineer to reestablish the connection. Use concrete masonry for concrete collar conforming to standard spec 520.2.4. Ensure that the connection does not negatively impact the current flow capacity of the drain tile.

D Measurement

The County will measure Connect Drain Tile as each new drain tile connection to a structure or pipe acceptably completed. Measurement will include connections for new underdrain structures placed in previous stages of the project, in addition to pipe or structures constructed under previous projects.

E Payment

The County will pay for measured quantities at the contract unit price under the following bid item:

ITEM NUMBER	DESCRIPTION	UNIT
SPV.0060.03	Connect Drain Tile	EACH

Payment is full compensation for performing all work; removing seals, end walls and concrete collars, providing all materials, couplings, and concrete collars. Any additional pipe or materials required to connect the drain tile shall be considered incidental to this bid item. The new pipe that restored drainage will be paid separately under their respective bid items.

31. Utility Line Opening, Item SPV.0060.04.

A Description

This special provision describes excavating to uncover utilities for the purpose of determining elevation or location and potential conflicts as shown on the plans or as directed by the engineer.

B (Vacant)

C Construction

Perform the excavation in such a manner that the utility in question is not damaged and the safety of the workers is not compromised.

Perform the utility line openings as soon as possible and at least 10 days in advance of proposed utility construction to allow any conflicts to be resolved with minimal disruption.

Give the engineer a minimum of three working days once utility line opening information is received to review all relevant design information prior to proposed utility construction. Where utilities are within 6 feet of each other at a potential conflict location, only one utility line opening will be called for. In these cases, a single utility line opening will be considered full payment to locate multiple utilities. Utility line openings include a trench up to 10 feet long as measured at the trench bottom, and of any depth required to locate the intended utility.

Approve and coordinate all utility line openings with the engineer. Notify the utility engineers or their agents of this work a minimum of five working days prior to the work so they may be present when the work is completed.

Replace pavement over utility line opening trenches that are within the staged traffic area as directed by the engineer. Replace pavement and open to traffic within 24 hours of the excavation as directed by the engineer.

D Measurement

The County will measure Utility Line Opening as each individual utility line opening location acceptably completed.

E Payment

The County will pay for measured quantities at the contract unit price under the following bid item:

ITEM NUMBER	DESCRIPTION	UNIT
SPV.0060.04	Utility Line Opening	EACH

Payment is full compensation for the excavation required to expose the utility line; backfilling with existing material removed from the excavation; compacting the backfill; restoring the site; and for cleanup.

Existing pavement, concrete curb, gutter, and sidewalk removals necessary to facilitate utility line openings are not considered part of or paid for under Utility Line Openings, but are considered separate and measured and paid for separately as removal items. Pavement replacement material, concrete curb, gutter, and sidewalk items will also be considered separate from Utility Line Openings and will be measured and paid for separately.

32. Silt Fence Heavy Duty, Item SPV.0090.01.

A Description

This special provision describes furnishing, installing, and removing heavy duty silt fence as shown on the plans or as directed by the engineer before construction activities begin.

B Materials

Furnish heavy duty silt fence consisting of a composite woven wire fabric, posts, geotextile fabric, and fasteners to be assembled by the contractor. Woven wire fabric shall be a standard field fence type, a minimum of 3 feet high with a maximum mesh spacing of 6-inches and minimum 14½-gage wire.

Provide metal posts with a minimum length of 6-feet, 3-inches. Posts shall be “studded tee” or “U” type with a minimum weight of 1.3 lb/ft.

Provide geotextile fabric, non-woven with properties as specified in 628.2.6.1.

C Construction

Install heavy duty silt fence as shown on the plans. Space ties and anchors adequately to resist current flow. Remove silt fence only after construction activities have been completed. Remove trapped silt prior to removing the fence as directed by the engineer. Use heavy duty silt fence in wetland areas up to 6-inches of standing water.

D Measurement

The owner will measure Heavy Duty Silt Fence by the linear foot acceptably completed.

E Payment

The owner will pay for measured quantities at the contract unit price under the following bid item:

ITEM NUMBER	DESCRIPTION	UNIT
SPV.0090.01	Heavy Duty Silt Fence	LF

Payment is full compensation for furnishing, installing, maintaining, and removing the heavy duty silt fence.

33. Asphaltic Curb Temporary, Item SPV.0090.02.

A Description

This special provision describes constructing asphaltic curb at the location shown in the plans and removing it when no longer needed to direct temporary drainage and when ready to construct the final improvements.

B Materials

Furnish materials conforming to standard spec 465.2 (2) for temporary pavement.

C Construction

Perform work in conformance to standard spec 465.3.2. Approximate the shape of the existing concrete curb head matched into.

D Measurement

The owner will measure Asphaltic Curb Temporary by the linear foot acceptably completed measured along the base of the curb face.

E Payment

The owner will pay for measured quantities at the contract unit price under the following bid item:

ITEM NUMBER	DESCRIPTION	UNIT
SPV.0090.02	Asphaltic Curb Temporary	LF

Payment is full compensation for furnishing, placing, and compacting the mixture; for forming the curb; and removing and disposing of the curb.

34. Proof Rolling, Item SPV.0170.01.

A Description

This special provision describes the testing of the stability of the compacted subgrade and base material by rolling with a tri-axle dump truck.

B Materials

Fully load a tri-axle dump truck to within 3 tons of the vehicle legal load limit and provide a minimum gross vehicle weight of 30 tons. Uniformly inflate all tires to the pressure recommended by the manufacturer for the applicable wheel load.

C Construction

Completely compact and shape the subgrade to approximate grade. Test roll at normal walking speed under the direction of the engineer or his representative. Roll the road subgrade and base across the width of the entire roadway. Make multiple passes throughout the length of the test area. Center each pass on a proposed lane.

D Measurement

The owner will measure Proof Rolling by the station along the roadway centerline or reference line acceptably completed.

E Payment

The owner will pay for measured quantities at the contract unit price under the following bid item:

ITEM NUMBER	DESCRIPTION	UNIT
SPV.0170.01	Proof Rolling	STA

Payment is full compensation for performing the Proof Rolling and for retesting as determined by the engineer.

35. Stormwater Treatment Filter Strips, Item SPV.0180.01.

A Description

This special provision describes the construction of Stormwater Treatment Filter Strips as shown on the plans and as herein provided.

B Materials

Sand shall be poorly graded with less than 5% fines (USCS classification SP) and as defined in the following table.

Sieve	Maximum Percent Passing
No. 4	100%
No. 10	90%
No. 40	10%
No. 200	5%

C Construction

Undercut or underfill all areas designated for filter strips to a degree that if covered with the specified depth of sand and topsoil, the finished work conforms to the required lines, grades, slopes, and cross sections the plans and drawings show. Place sand to the depth specified in the plans, then place topsoil to the minimum depth required in the contract. Use tracked equipment with a track pressure no greater than 4.5 psi. The subsoiled filterstrip limits on the embankment should begin two feet from the swale flow line, can extend no more than 5 vertical feet towards the highway, and end no closer than 10 feet from the subgrade shoulder point.

Subsoiling is the practice of dragging tines, shanks or claws through soil to a depth of approximately

20 inches to loosen and mix the soil layers. Subsoil the filter strip areas after topsoil placement. Schedule a 50-foot long test section and demonstrate competence to the engineer prior to continuing operations. The engineer shall identify the test area. Loosen subsoiled areas to a depth of 20 inches including the in-place material, sand and topsoil. After obtaining approval by the engineer that the equipment and methods are sufficient to obtain the desired results, complete the subsoiling operation. Subsoiling done without the engineer's approval will be considered as unauthorized work.

Subsoil each filter strip area three times to mix the topsoil, sand and in-place material. Do not pull the shanks through previous channels, but instead create multiple channels in the filter strip. Work at right angles to the direction of surface drainage. Create channels by a commercially available, multi-shanked implement attached to track-type equipment. The equipment shall be capable of exerting a penetration force necessary for the site. No disc cultivators, chisel plows, or spring-loaded equipment will be allowed. Space the grid channels 24 to 30 inches apart, depending on equipment, site conditions, and the plan. The channel depth shall be a minimum 20 inches. If soils are saturated, delay operations until the soil moisture is at field capacity or less. Field capacity is the amount of water retained in the soil after it has been saturated and allowed to drain freely.

Upon completion and acceptance of the subsoiled area, finish grade surface as described in standard spec 625.3.3 (2) and (4), except that only light-weight equipment, as approved by the engineer, may be used to break down clods and lumps. Drive no other equipment over the subsoiled area after the filter strip is finish-graded. Any filter strip areas that become compacted due to the contractor's operations, must be subsoiled and finish-graded at no expense to the County.

Seed, fertilize, and mulch the filter strip immediately after final grading. Place safety fence on the upgradient side of the filter strip, offset by one foot away from the filter strip immediately after seeding and mulching. Remove the safety fence only after all construction activities in the general area of the filter strip have been completed.

D Measurement

The owner will measure Stormwater Treatment Filter Strips by the square yard acceptably completed.

E Payment

The owner will pay for measured quantities at the contract unit price under the following bid item:

ITEM NUMBER	DESCRIPTION	UNIT
SPV.0180.01	Stormwater Treatment Filter Strips	SY

Payment is full compensation for for constructing the filter strip including furnishing and placing the sand; for subsoiling; and for furnishing all labor, tools, equipment, materials, and incidentals necessary to complete the work. The County will pay for safety fence under the Fence Safety bid item.

36. Select Crushed Material for Travel Corridor, Item SPV.0195.01.

A Description

This special provision describes providing and placing select crushed material to fill voids and create a wildlife travel corridor, as shown in the plans and as herein provided.

B Materials

Furnish select crushed material according to the pertinent requirements of standard spec 312. Material shall be clean and substantially free from material passing the No. 4 (4.75mm) sieve.

The owner will assess select crushed material acceptability based primarily on the engineer's visual inspection. The County may require contractor to sample, test, and report gradation or fracture results to show conformance of material. One test per source, production process, or change of production process may be required.

C Construction

Place 2-inches of material after the heavy riprap has been completed. Place material such that voids in the finished surface are three inches or less in any dimension. Lightly tamp the select crushed into the heavy riprap avoiding settlement of the heavy riprap. Place additional 2-inches of material on top of previously placed select crushed material and smooth.

D Measurement

The owner will measure Select Crushed Material for Travel Corridor by the ton acceptably completed.

E Payment

The owner will pay for measured quantities at the contract unit price under the following bid item:

ITEM NUMBER	DESCRIPTION	UNIT
SPV.0195.01	Select Crushed Material for Travel Corridor	TON

Payment is full compensation for providing, placing, and shaping the material; for compaction and all work necessary to provide gradation or fracture test results.

KENOSHA COUNTY
DEPARTMENT OF PUBLIC WORKS

KENOSHA PROJECT ID: RD16-003

PLAN OF PROPOSED IMPROVEMENT

CTH S

AMAZON WEST DRIVEWAY TO CTH H

KENOSHA COUNTY

WISCONSIN

ORDER OF SHEETS

Section No.	1	Title
Section No.	2	Typical Sections and Details
Section No.	3	Estimate of Quantities
Section No.	3	Miscellaneous Quantities
Section No.	4	Right of Way Plat
Section No.	5	Plan and Profile
~~Section No.~~	~~6~~	~~Standard Detail Drawings~~
Section No.	7	Sign Plates
Section No.	8	Structure Plans
Section No.	9	Computer Earthwork Data
Section No.	9	Cross Sections

TOTAL SHEETS =

DESIGN DESIGNATION

A.A.D.T.	2019	=	22,710
A.A.D.T.	2039	=	24,420
D.H.V.	2019	=	2,634
D.D.		=	59/41
T.		=	8.2
DESIGN SPEED		=	50 MPH
ESALS		=	2,300,000

CONVENTIONAL SYMBOLS

COUNTY LINE
CORPORATE LIMITS
PROPERTY LINE
LIMITED EASEMENT
EXISTING RIGHT OF WAY
PROPOSED OR NEW R/W LINE
FENCE
GUARD RAIL
SLOPE INTERCEPT
ORIGINAL GROUND
MARSH OR ROCK PROFILE (To be noted as such) — ROCK
MARSH AREA
WOODED OR SHRUB AREA
STREAM OR WATER EDGE
BUSH
PINE TREE (SIZE)
TREE (SIZE)
TRAFFIC SIGNAL CONTROL CABINET
TRAFFIC SIGNAL
TRAFFIC SIGNAL MAST-ARM
TRAFFIC SIGNAL WITH LIGHT
EXISTING PULL BOX
BOLLARD

COMBUSTIBLE FLUIDS — CAUTION
UNDERGROUND UTILITIES
GAS — (SIZE) G
SANITARY SEWER — (SIZE) SAN
STORM SEWER — (SIZE) SS
WATER — (SIZE) W
ELECTRIC — E
TELEPHONE — T
FIBER OPTIC — FO
CABLE TELEVISION — TV
FORCE MAIN — FM
MANHOLE — MH
UTILITY PEDESTAL
FIBER OPTIC HAND HOLE — HH
POWER POLE
TELEPHONE POLE
RAILROAD
HYDRANT
LIGHT POLE
RAILROAD SIGNAL
SIGN
TRANSMISSION TOWER
VALVE — (TYPE)
CURB STOP — CS
EXISTING CULVERT — (SIZE, TYPE)
PROPOSED CULVERT (Box or Pipe)

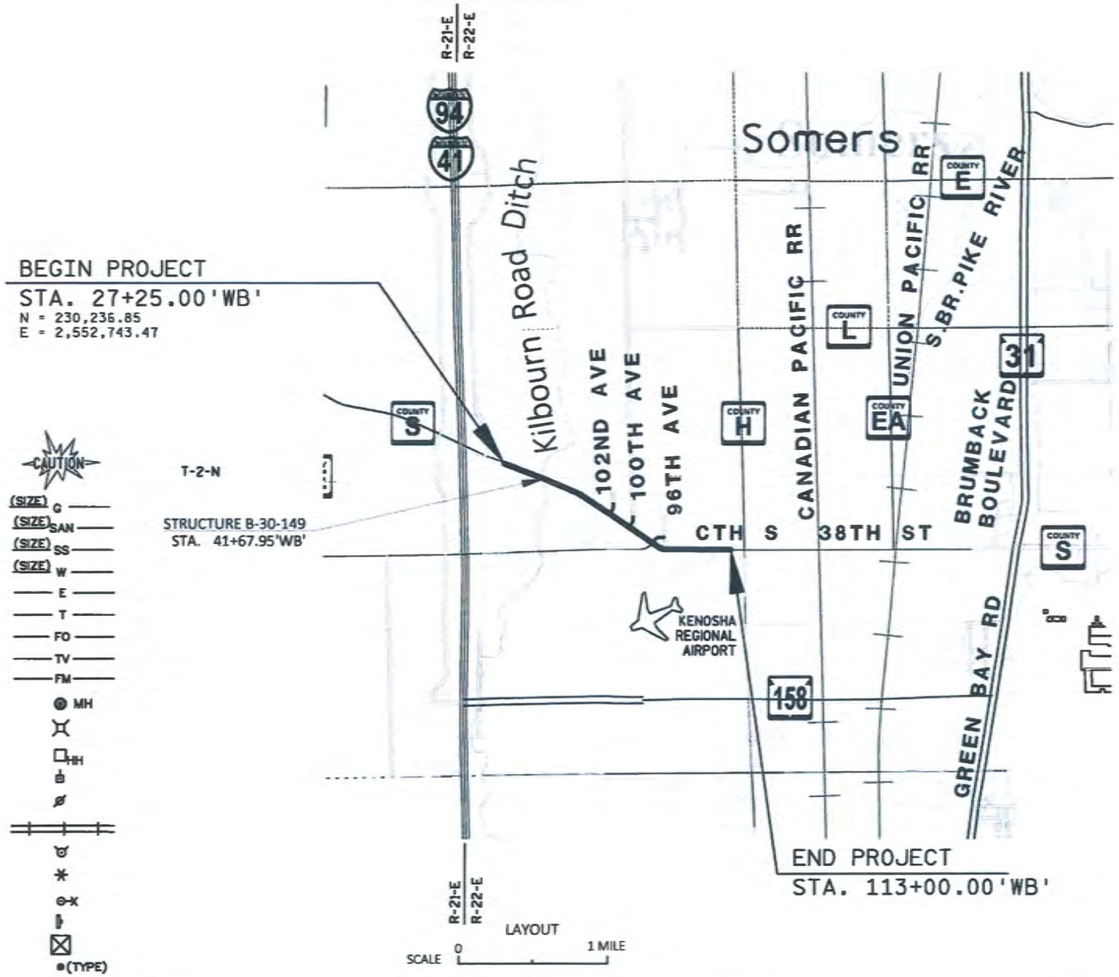

TOTAL NET LENGTH OF CENTERLINE = 1.624 MI.

COORDINATES ON THIS PLAN ARE REFERENCED TO THE WISCONSIN STATE PLANE COORDINATE SYSTEM, NAD27 SOUTH ZONE.
ELEVATIONS SHOWN ON THIS PLAN ARE REFERENCED TO NGVD29.

ACCEPTED FOR

COUNTY of KENOSHA

Clement Abongwa
(Printed Name) (Signature)

5/11/2020 DIRECTOR OF HIGHWAYS
(Date) (Title of Official)

ORIGINAL PLANS PREPARED BY

raSmith
CREATIVITY BEYOND ENGINEERING
rasmith.com

WISCONSIN
CALEB L. MANSKE
E-41727
BROOKFIELD
WI
PROFESSIONAL ENGINEER

5/11/2020 Caleb L. Manske
(Date) (Signature)

COUNTY: KENOSHA

FILE NAME : T:\1165811\CIVIL3D\1165811\SHEETSPLAN\010101-TI.DWG
PLOT DATE : 5/5/2020 3:36 PM
PLOT BY : GUILLAMA, TINA
PLOT NAME :

2

STANDARD ABBREVIATIONS

AC	ACRE	MON	MONUMENT
ADJ	ADJUST	NOM	NOMINAL
AH	AHEAD	NC	NORMAL CROWN
ASPH	ASPHALTIC	N	NORTH
AVG	AVERAGE	Y	NORTH GRID COORDINATE
ADT	AVERAGE DAILY TRAFFIC	NB	NORTHBOUND
AMC	ADJUSTING MANHOLE COVER	NO	NUMBER
ASMC	ADJUSTING SANITARY MANHOLE COVER	OD	OUTSIDE DIAMETER
AWV	ADJUSTING WATER VALVE	PAVT	PAVEMENT
BK	BACK	PLE	PERMANENT LIMITED EASEMENT
BAD	BASE AGGREGATE DENSE	PT	POINT
BM	BENCHMARK	PC	POINT OF CURVATURE
BMP	BEST MANAGEMENT PRACTICE	PI	POINT OF INTERSECTION
CB	CATCH BASIN	PT	POINT OF TANGENCY
C/L	CONSTRUCTION LINE	PVC	POLYVINYL CHLORIDE
Δ	CENTRAL ANGLE OR DELTA	PCC	PORTLAND CEMENT CONCRETE
CL	CLASS OR CENTER LINE	LB	POUND
CONC	CONCRETE	PSF	POUNDS PER SQUARE FOOT
CONST	CONSTRUCTION	PSI	POUNDS PER SQUARE INCH
CABC	CRUSHED AGGREGATE BASE COURSE	PE	PRIVATE ENTRANCE
CE	COMMERCIAL ENTRANCE	PGL	PROFILE GRADE LINE
CFS	CUBIC FEET PER SECOND	PL	PROPERTY LINE
CY	CUBIC YARD	R	RADIUS OR RANGE
C&G	CURB AND GUTTER	RC	REVERSE CURVE
D	DEGREE OF CURVE	R/L	REFERENCE LINE
DHV	DESIGN HOUR VOLUME	REINF	REINFORCING OR REINFORCEMENT
DIA	DIAMETER	REQD	REQUIRED
DD	DIRECTIONAL DISTRIBUTION	RT	RIGHT
DWY	DRIVEWAY	R/W	RIGHT-OF-WAY
E	EAST	RD	ROAD
X	EAST GRID COORDINATE	RDWY	ROADWAY
EB	EASTBOUND	SEC	SECTION
EL	ELEVATION	SHLDR	SHOULDER
ESALS	EQUIVALENT SINGLE AXLE LOADS	S	SOUTH
EXC	EXCAVATION	SB	SOUTHBOUND
EBS	EXCAVATION BELOW SUBGRADE	SQ	SQUARE
EX	EXISTING	SF	SQUARE FEET
FPS	FEET PER SECOND	SW	SIDEWALK
FERT	FERTILIZE	SY	SQUARE YARD
FL	FLOW LINE	SDD	STANDARD DETAIL DRAWINGS
FT	FOOT	STH	STATE TRUNK HIGHWAYS
HES	HIGH EARLY STRENGTH	STA	STATION
HP	HIGH POINT	SS	STORM SEWER
HMA	HOT MIX ASPHALT	SSPRC	STORM SEWER PIPE REINFORCED CONCRETE
CWT	HUNDREDWEIGHT	ST	STREET
HYD	HYDRANT	STR	STRUCTURE OR STRUCTURAL
INL	INLET	SE	SUPERELEVATION
IC	INLET COVERS TYPE H	T	TANGENT OR TOWN
IS	INLETS 2X3 AND INLET COVERS TYPE H	TEMP	TEMPORARY
ID	INSIDE DIAMETER	TI	TEMPORARY INTEREST
I	INTERSECTION ANGLE	TLE	TEMPORARY LIMITED EASEMENT
INV	INVERT	T%	TRUCKS (PERCENT OF)
IP	IRON PIPE OR PIN	TYP	TYPICAL
LC	LATERAL CLEARANCE	V	DESIGN SPEED
LT	LEFT	VAR	VARIABLE
LF	LINEAR FOOT	VERT	VERTICAL
LP	LOW POINT	VOL	VOLUME
LS	LUMP SUM	WM	WATERMAIN
MH	MANHOLE	WV	WATER VALVE
MAX	MAXIMUM	W	WEST
Mgal	MEGAGALLON	WB	WESTBOUND
MPH	MILES PER HOUR	YD	YARD
MIN	MINIMUM		

GENERAL NOTES

1 THE LOCATION OF EXISTING AND PROPOSED UTILITY INSTALLATIONS AS SHOWN ON THE PLAN IS APPROXIMATE. THERE MAY BE OTHER UTILITY INSTALLATIONS WITHIN THE PROJECT AREA WHICH ARE NOT SHOWN.

2 CONTRACTOR SHALL CONTACT DIGGER'S HOTLINE AND ALL UTILITIES LISTED TO VERIFY UTILITY WORK STATUS PRIOR TO BIDDING.

3 ALL OPENINGS BELOW SUBGRADE, RESULTING FROM REMOVALS OR ABANDONMENTS, SHALL BE BACKFILLED IN ACCORDANCE WITH SECTION 204 OF THE STANDARD SPECS. GRANULAR BACKFILL SHALL BE INCIDENTAL TO CONSTRUCTION.

4 NO TREES OR SHRUBS SHALL BE REMOVED UNLESS DESIGNATED FOR REMOVAL BY THE ENGINEER.

5 CURB AND GUTTER GRADES ARE GIVEN AT THE FLANGE LINE UNLESS OTHERWISE NOTED.
CURB AND GUTTER RADII ARE MEASURED AT THE FACE OF CURB UNLESS OTHERWISE NOTED.

6 ALL DISTURBED AREAS, NOT SURFACED WITH ASPHALT, CONCRETE, GRAVEL, OR SOD LAWN ARE TO BE COVERED WITH 4" SALVAGED TOPSOIL, SEEDED, FERTILIZED, AND MULCHED UNLESS OTHERWISE DIRECTED BY THE ENGINEER.

7 EROSION CONTROL BMP'S ARE AT SUGGESTED LOCATIONS. THE ACTUAL LOCATIONS WILL BE DETERMINED BY THE CONTRACTOR'S EROSION CONTROL IMPLEMENTATION PLAN (ECIP) AND BY THE ENGINEER. EROSION CONTROL BMP'S SHALL BE MAINTAINED UNTIL PERMANENT VEGETATION IS ESTABLISHED OR UNTIL THE ENGINEER DETERMINES THAT THE BMP IS NO LONGER REQUIRED.

8 RE-TOPSOIL GRADED AREAS, AS DESIGNATED BY THE ENGINEER, IMMEDIATELY AFTER GRADING IS COMPLETED WITHIN THOSE AREAS. SEED, FERTILIZE, AND MULCH / EROSION MAT TOPSOIL AREAS, AS DESIGNATED BY THE ENGINEER, WITHIN FIVE (5) CALENDAR DAYS AFTER PLACING TOPSOIL.

9 STOCKPILE EXCESS MATERIAL OR SPOILS ON UPLAND AREAS AWAY FROM WETLANDS, FLOODPLAINS, AND WATERWAYS. STOCKPILED SOIL SHALL BE PROTECTED AGAINST EROSION.
IF STOCKPILED MATERIAL IS LEFT MORE THAN FOURTEEN (14) CALENDAR DAYS, SEED THE STOCKPILE WITH TEMPORARY SEED AND MULCH.

10 EROSION CONTROL DEVICES SHALL BE PLACED IN SEQUENCE WITH CONSTRUCTION OPERATIONS OR AS DETERMINED BY THE ENGINEER.

11 DO NOT APPLY FERTILZER WITHIN 100 FEET OF A WATERBODY OR WETLAND OR WITHIN 24 HOURS OF A RUNOFF EVENT.

12 SUBSURFACE EXPLORATION REPORTS WITH SOIL BORING INFORMATION ARE AVAILABLE FROM KENOSHA COUNTY, CLEMENT ABONGWA AT (262) 653-1870.

HMA PAVEMENT		
GRADATIONS:	LAYERS	DESIGNATION
7-INCH	ONE 2.0" UPPER LAYER	4 MT 58-28S
	TWO 2.5" LOWER LAYERS	3 MT 58-28S
5-INCH	ONE 2" UPPER LAYER	4 MT 58-28S
	ONE 3" LOWER LAYER	3 MT 58-28S

ORDER OF SECTION 2 SHEETS

PROJECT OVERVIEW
TYPICAL SECTIONS
CONSTRUCTION DETAILS
PAVING DETAILS
EROSION CONTROL
STORM SEWER PLAN
UTILITY DETAILS
SIGNING REMOVALS
PERMANENT SIGNING
PAVEMENT MARKING
TRAFFIC CONTROL
DETOUR
ALIGNMENT

DIGGERS HOTLINE
Dial 811 or (800) 242-8511
www.DiggersHotline.com

UTILITIES

KENOSHA WATER UTILITY
WATER & WASTEWATER
MR. CURT CZARNECKI
4401 GREEN BAY ROAD
KENOSHA, WI 53144
(262) 653-4306
CCZARNECKI@KENOSHA.ORG

WE ENERGIES ELECTRIC
MR. DAN SANDE
333 W. EVERETT STREET, A299
MILWAUKEE, WI 53203
(414) 221-5617
DAN.SANDE@WE-ENERGIES.COM

WE ENERGIES GAS OPERATIONS
MR. DAN SANDE
333 W. EVERETT STREET, A299
MILWAUKEE, WI 53203
(414) 221-5617
DAN.SANDE@WE-ENERGIES.COM

AT&T WISCONSIN
MR. MIKE VANBOVEN
411 7TH STREET
RACINE, WI 53403
(262) 636-0514
MV3658@ATT.COM

CHARTER COMMUNICATIONS
MR. NEAL LONG
1320 N. MARTIN LUTHER KING JR. DRIVE
MILWAUKEE, WI 53202
(414) 277-4271
NEAL.LONG@CHARTER.COM

MIDWEST FIBER NETWORKS
MR. NATE WRIGHT
6070 N FLINT RD
GLENDALE, WI 53209
(414) 672-5612
NWRIGHT@MIDWESTFIBERNETWORKS.COM

VILLAGE AND TOWN OF SOMERS
WATER UTILITY/SANITARY SEWER
MR. JERRY SMITH
7511 12TH STREET
KENOSHA, WI 53144
(262) 859-2822
GSMITH@SOMERS.ORG

CITY OF KENOSHA, STREET LIGHTING
MR. BRIAN CATER
625 52ND STREET
KENOSHA, WI 53140
262-653-4156
BCATER@KENOSHA.ORG

SPRINT
MR. JASON JARVIS
7459 W. 79TH STREET
BRIDGEVILLE, IL 60455
JASON.M.JARVIS@SPRINT.COM

VERIZON
MR. MARC FISHER
2415 INDUSTRIAL DRIVE
MONONA, WI 53713
(262) 349-5861
MARC.FISHER@VERIZON.COM

DESIGN CONSULTANT

raSmith
MR. JOHN ELKIN
16745 W BLUEMOUND ROAD
BROOKFIELD, WI 53005-5938
(262) 781-1000
JOHN.ELKIN@RASMITH.COM

raSmith
MR. CALEB MANSKE
16745 W BLUEMOUND ROAD
BROOKFIELD, WI 53005-5938
(262) 317-3332
CALEB.MANSKE@RASMITH.COM

KENOSHA COUNTY

MR. CLEMENT ABONGWA
19600 75TH STREET, SUITE 122-1
BRISTOL, WI 53104
(262) 857-1870
CLEMENT.ABONGWA@KENOSHACOUNTY.ORG

WISCONSIN DNR

DNR SERVICE CENTER
MR. CRAIG WEBSTER
141 NW BARSTOW STREET
WAUKESHA, WI 53188
(262) 574-2141
CRAIG.WEBSTER@WISCONSIN.GOV

KENOSHA REGIONAL AIRPORT

MR. COREY REED
9900 52ND STREET
KENOSHA, WI 53144
(262) 653-4160
CREED@KENOSHA.ORG

2

2

N

INTERSTATE 94

INTERSTATE 41

COUNTY S

COUNTY H

WEST FRONTAGE RD

120TH AVE

KILBOURN RD DITCH

BEGIN PROJECT
STA 27+25'WB'
N = 230,236.85
E = 2,552,743.47

NEW STRUCTURE
B-30-149

CTH S/BURLINGTON ROAD

EXISTING STRUCTURE
B-30-76
TO REMAIN

WETLAND BOUNDARY (TYP)

VILLAGE OF SOMERS

102ND AVE

100TH AVE

STOP CONTROL (SIDE ROAD ONLY)

STOP CONTROL (SIDE ROAD ONLY)

96TH AVE CONNECTOR

96TH AVE

WETLAND BOUNDARY (TYP)

WETLAND BOUNDARY (TYP)

END PROJECT
STA 113+00'WB'

CANADIAN PACIFIC RR

CTH S/38TH STREET

TOWN OF SOMERS

38TH STREET

38TH ST

TOWN OF SOMERS

MUNICIPAL LIMITS (TYP)

CITY OF KENOSHA

MATCH WISDOT PROJECT
ID: 3210-00-75

KENOSHA REGIONAL AIRPORT

TOWN OF SOMERS

PROJECT NO: RD16-003	HWY: CTH S	COUNTY: KENOSHA	PROJECT OVERVIEW	SHEET 4	E

FILE NAME : T:\1165811\CIVIL3D\1165811\SHEETSPLAN\020201-PO.DWG
LAYOUT NAME - 1 IN 1000 FT

PLOT DATE : 5/11/2020 12:41 PM PLOT BY : GUILLAMA, TINA PLOT NAME : PLOT SCALE : 1 IN:1000 FT

WISDOT/CADDS SHEET 44

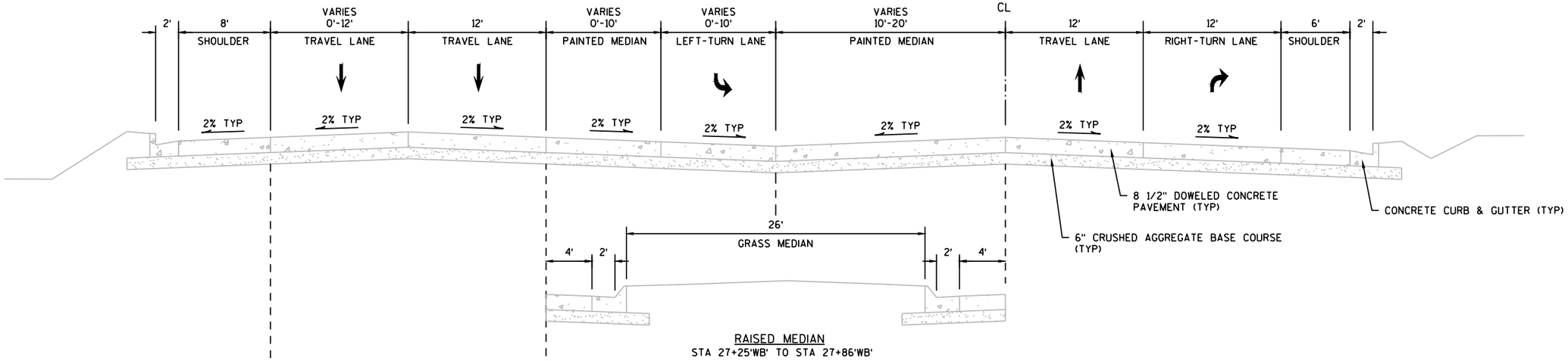

RAISED MEDIAN
STA 27+25'WB' TO STA 27+86'WB'

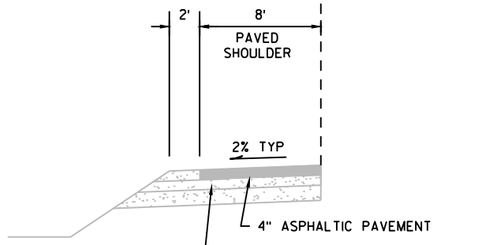

ASPHALT SHOULDER
STA 32+54'WB' TO STA 39+55'WB'

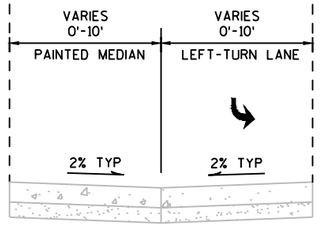

STA 31+70'EB' TO STA 39+44'EB'

TYPICAL EXISTING SECTION
CTH S
STA 27+25'WB' TO STA 39+55'WB'

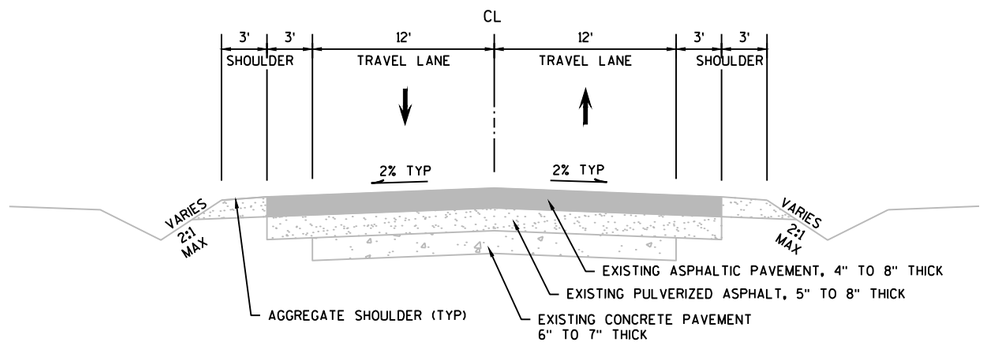

TYPICAL EXISTING SECTION
CTH S
STA 39+55'WB' TO STA 113+00'WB'

PROJECT NO: RD16-003	HWY: CTH S	COUNTY: KENOSHA	TYPICAL SECTIONS	SHEET 5	E

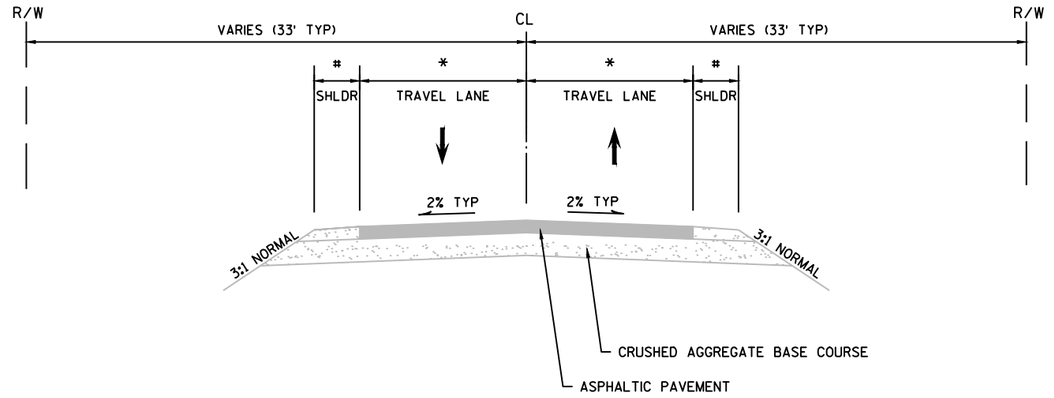

SIDE ROAD	* LANE WIDTH	# SHOULDER WIDTH
102ND AVE	10-FT	2-FT
100TH AVE	11-FT	2-FT
96TH AVE	10-FT	3-FT

TYPICAL EXISTING SECTION
102ND AVE
100TH AVE
96TH AVE

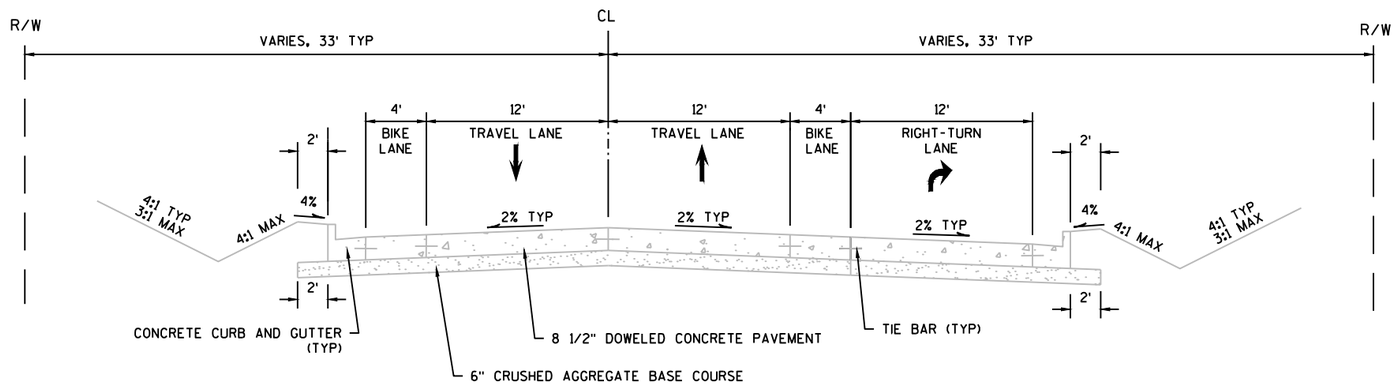

TYPICAL EXISTING SECTION
38TH STREET

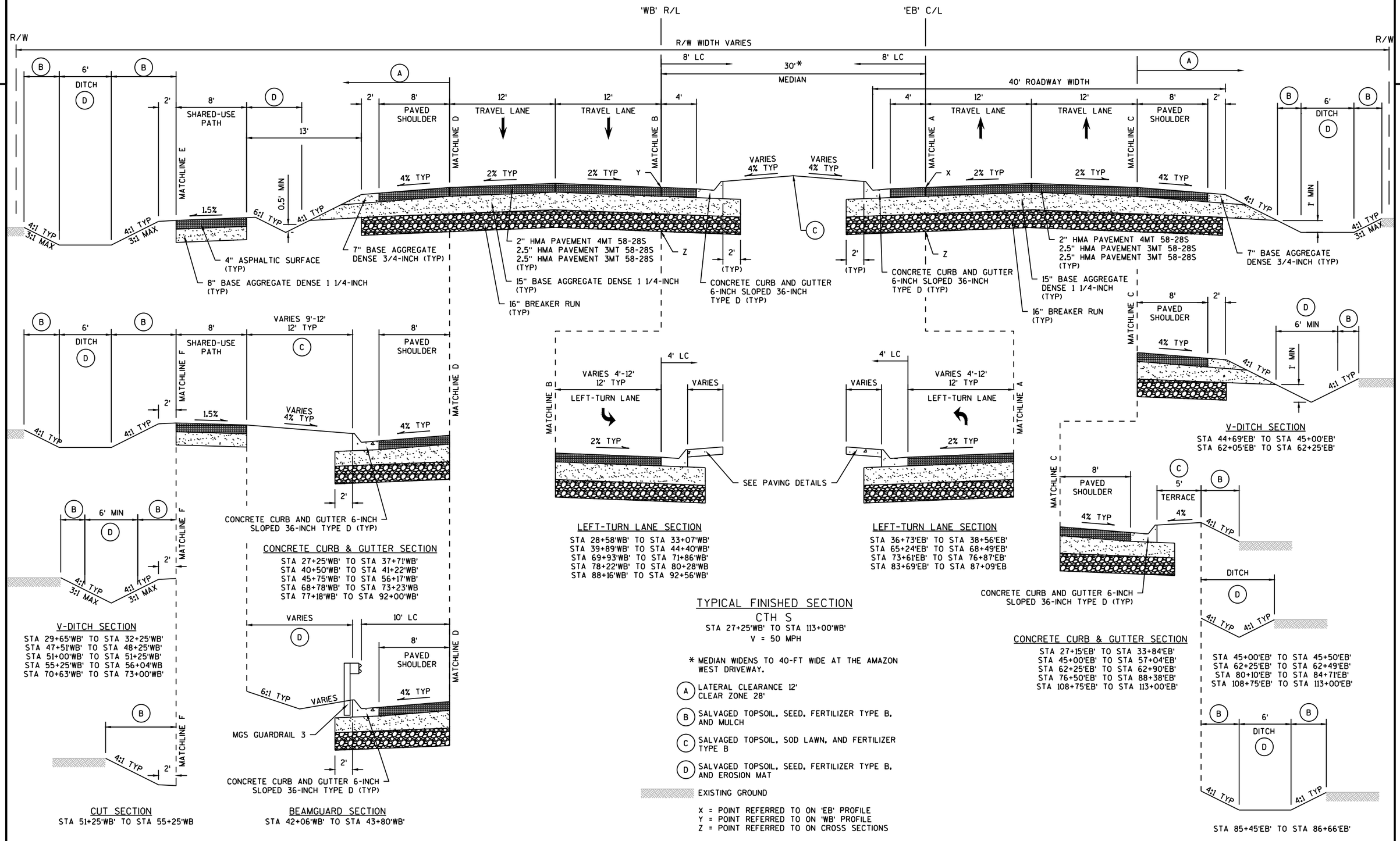

TYPICAL FINISHED SECTION
CTH S
STA 27+25'WB' TO STA 113+00'WB'
V = 50 MPH

* MEDIAN WIDENS TO 40-FT WIDE AT THE AMAZON WEST DRIVEWAY.

(A) LATERAL CLEARANCE 12'
CLEAR ZONE 28'

(B) SALVAGED TOPSOIL, SEED, FERTILIZER TYPE B, AND MULCH

(C) SALVAGED TOPSOIL, SOD LAWN, AND FERTILIZER TYPE B

(D) SALVAGED TOPSOIL, SEED, FERTILIZER TYPE B, AND EROSION MAT

EXISTING GROUND

X = POINT REFERRED TO ON 'EB' PROFILE
Y = POINT REFERRED TO ON 'WB' PROFILE
Z = POINT REFERRED TO ON CROSS SECTIONS

PROJECT NO: RD16-003	HWY: CTH S	COUNTY: KENOSHA	TYPICAL SECTIONS	SHEET 7	E

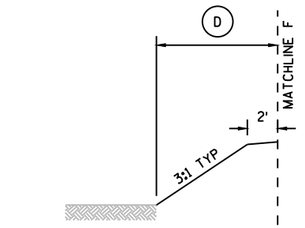

FILL SECTION
STA 27+25.67'WB' TO STA 29+65'WB

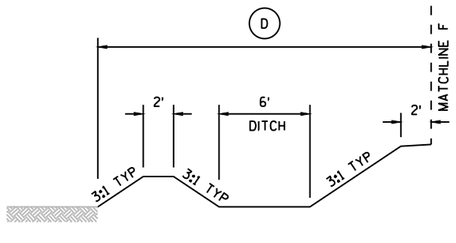

BERM SECTION
STA 32+40'WB' TO STA 41+22'WB

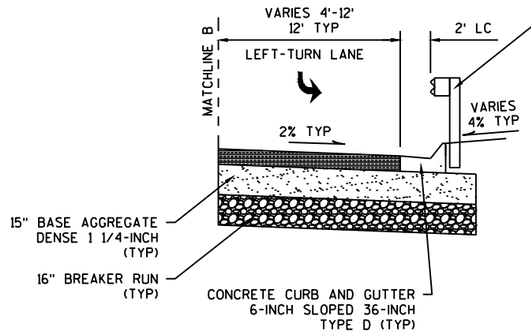

BEAMGUARD SECTION
STA 40+13'WB' TO STA 41+40'WB'
STA 42+06'WB' TO STA 43+98'WB'

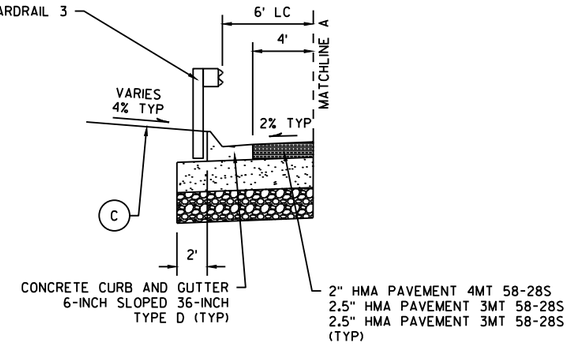

BEAMGUARD SECTION
STA 39+74'EB' TO STA 41+41'EB'
STA 41+87'EB' TO STA 43+55'EB'

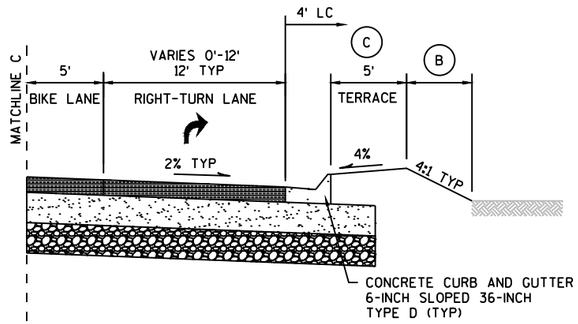

RIGHT-TURN LANE SECTION
STA 33+84'EB' TO STA 40+26'EB'

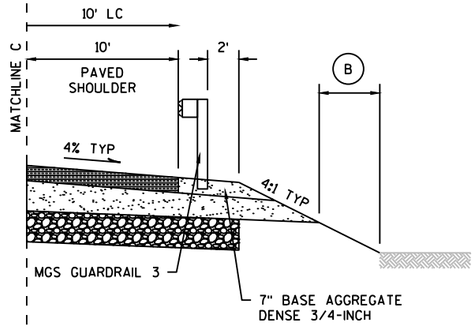

BEAMGUARD SECTION
STA 40+32'EB' TO STA 41+21'EB'

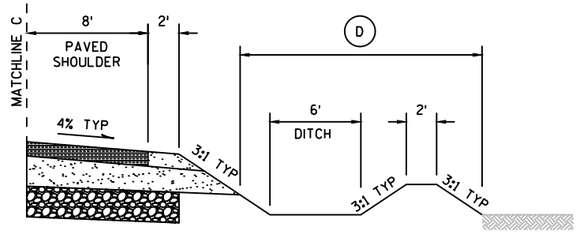

BERM SECTION
STA 65+44'EB' TO STA 67+84'EB

(B) SALVAGED TOPSOIL, SEED, FERTILIZER TYPE B, AND MULCH

(C) SALVAGED TOPSOIL, SOD LAWN, AND FERTILIZER TYPE B

(D) SALVAGED TOPSOIL, SEED, FERTILIZER TYPE B, AND EROSION MAT

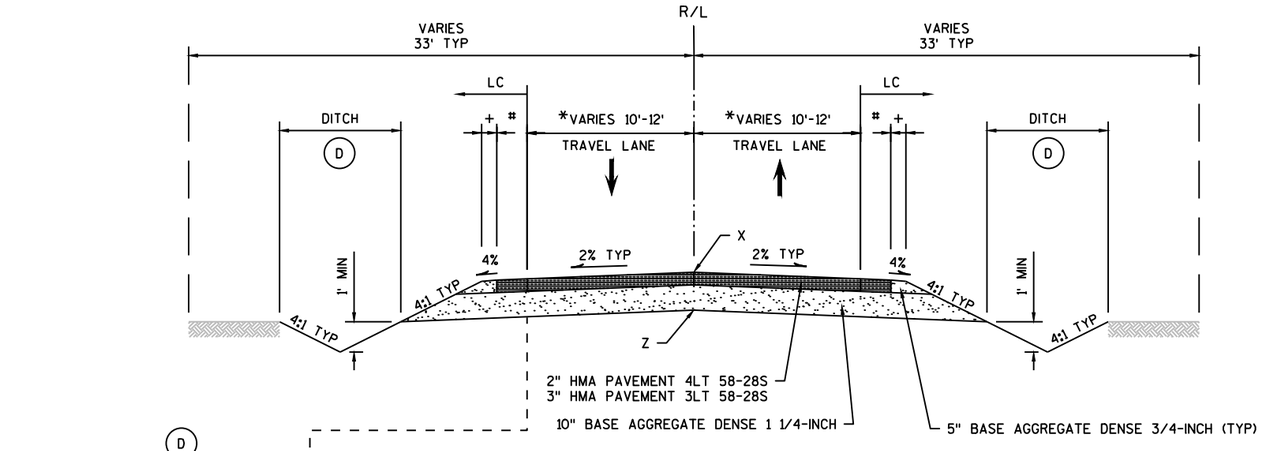

		SHOULDER WIDTH		
SIDE ROAD	*LANE WIDTH	#PAVED	+UNPAVED	LC
102ND AVE	10'	2'	1'	6'
100TH AVE	11'	2'	1'	6'
38TH ST	12'	3'	2'	7'

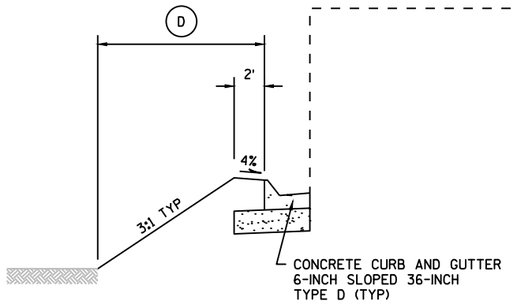

TYPICAL FINISHED SECTION
102ND AVENUE
STA 401+14 TO STA 403+50

100TH AVENUE
STA 501+14 TO STA 503+50

38TH STREET
STA 611+45 TO STA 615+52.72

(B) SALVAGED TOPSOIL, SEED, FERTILIZER TYPE B, AND MULCH

(D) SALVAGED TOPSOIL, SEED, FERTILIZER TYPE B, AND EROSION MAT

EXISTING GROUND

X = POINT REFERRED TO ON PROFILE
Z = POINT REFERRED TO ON CROSS SECTIONS

CONCRETE CURB & GUTTER SECTION
38TH STREET
STA 611+45 TO STA 612+33 LT

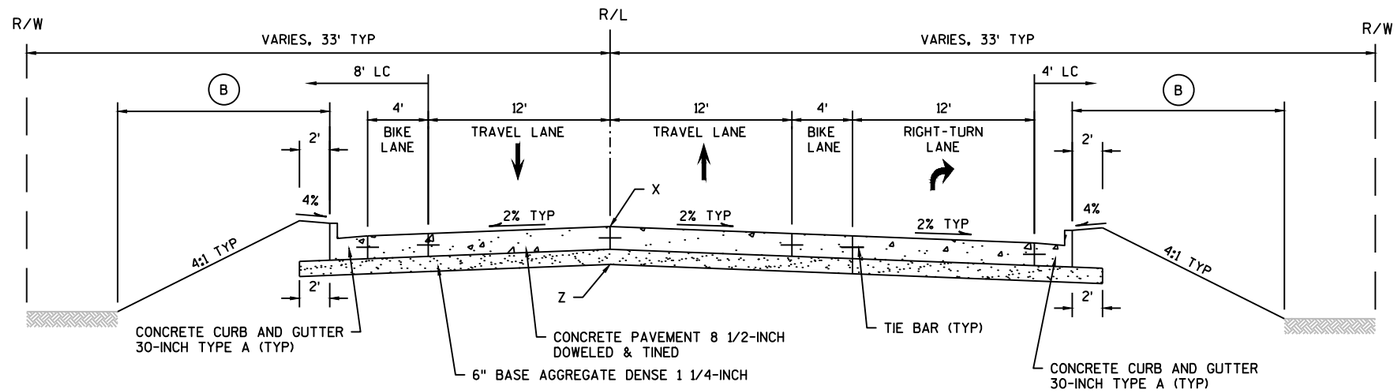

TYPICAL FINISHED SECTION
38TH STREET
STA 608+20 TO STA 609+00

PROJECT NO: RD16-003	HWY: CTH S	COUNTY: KENOSHA	TYPICAL SECTIONS	SHEET 9	E

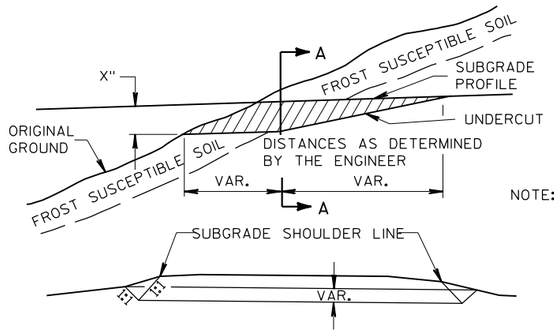

NOTE: BACKFILL MUST BE HOMOGENEOUS WITH ADJOINING FILL MATERIAL.

THE FILL SECTION WITHIN 100' OF THE MOUTH OF THE CUT MUST BE KEPT 2' BELOW SUBGRADE UNTIL E.B.S. IS COMPLETED.

SECTION A-A

CROSS SECTION SHOWING UNDERCUT

DETAIL FOR EXCAVATION BELOW SUBGRADE AT CUTS

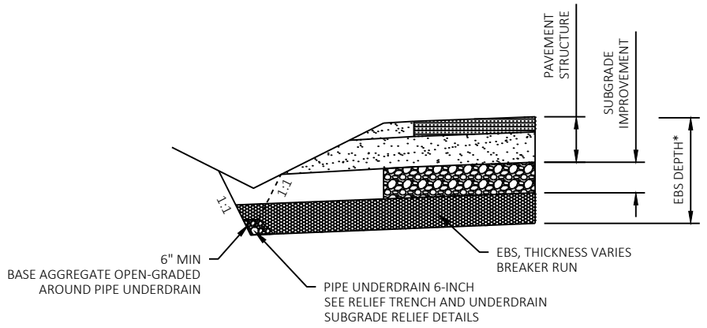

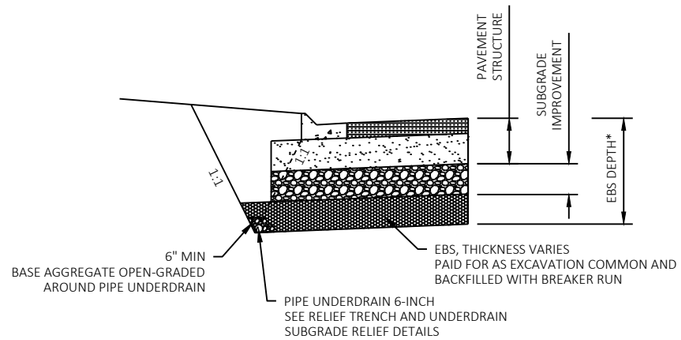

EXCAVATION BELOW SUBGRADE

FINAL LOCATIONS AND DEPTHS TO BE DETERMINED BY THE ENGINEER. THE ENGINEER MAY DIRECT THE USE OF PROOF ROLLING TO DETERMINE LIMITS AND EXTENTS OF EBS.

LOCATION	ROADWAY	DEPTH
STA. 41+90 to STA. 48+19	CTH S	3.5-FT
STA. 74+78 to STA. 79+75	CTH S	5.5-FT
STA. 500+00 to STA. 503+50	100TH AVE	3.5-FT

* DEPTH IS GIVEN BELOW EXISTING GROUND LEVEL. SOME LOCATIONS MAY NOT REQUIRE ADDITIONAL EXCAVATION BELOW SUBGRADE IMPROVEMENT LAYER.

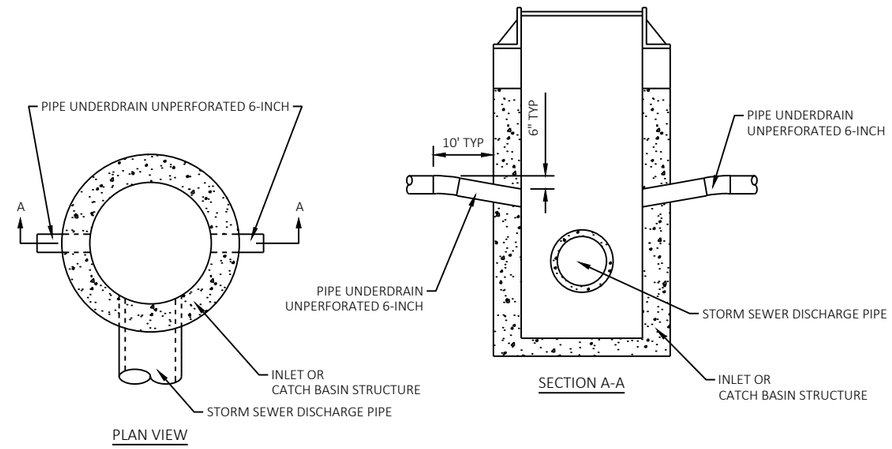

PLAN VIEW

SECTION A-A

UNDERDRAIN OUTFALL

NOTES:
1. SEE SDD INLETS MEDIAN 1 AND 2 GRATE FOR ADDITIONAL DETAILS AND INFORMATION.
2. SINGLE GRATES SHALL HAVE NO SLOPE.

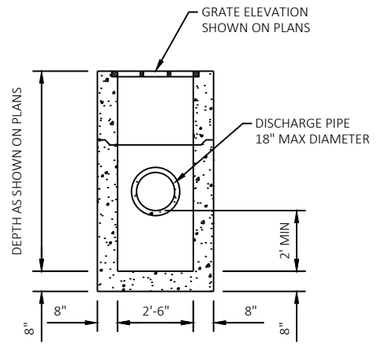

CATCH BASINS MEDIAN 1 GRATE

SEE PLANS FOR LOCATIONS

2

NOTES:

DETAILS OF CONSTRUCTION, MATERIALS, AND WORKMANSHIP NOT SHOWN ON THIS DRAWING SHALL CONFORM TO THE PERTINENT REQUIREMENTS OF THE STANDARD SPECIFICATIONS, APPLICABLE SPECIAL PROVISIONS, SDD FOR INLETS, 2X3 FT, AND SDD FOR MANHOLES 4-FT DIAMETER, 5-FT DIAMETER, 6-FT DIAMETER, AND 8-FT DIAMETER.

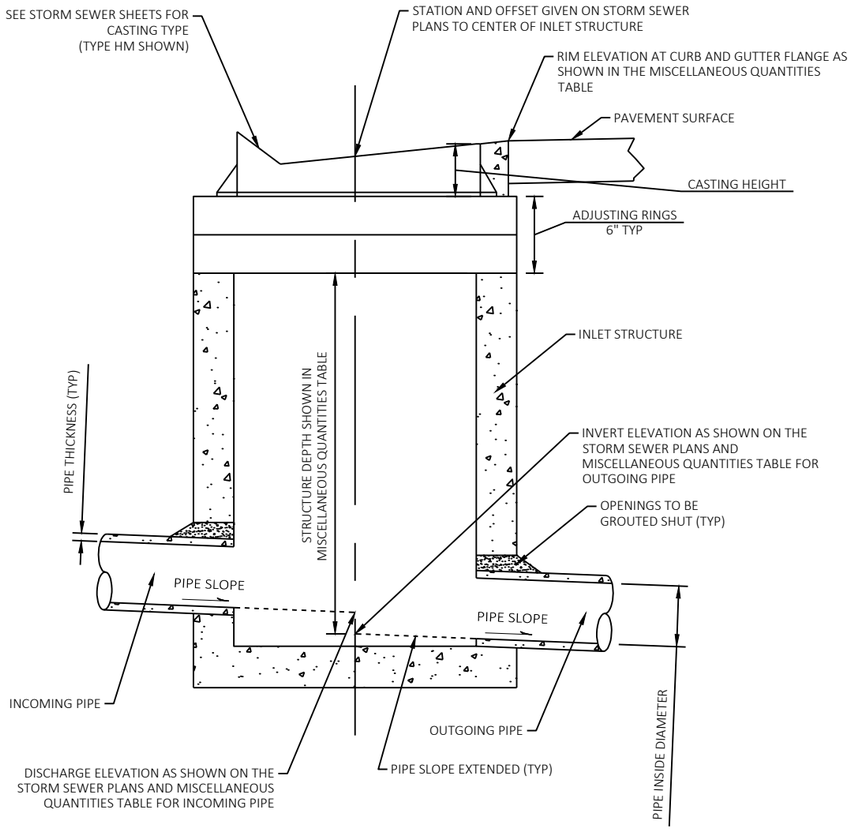

INLETS

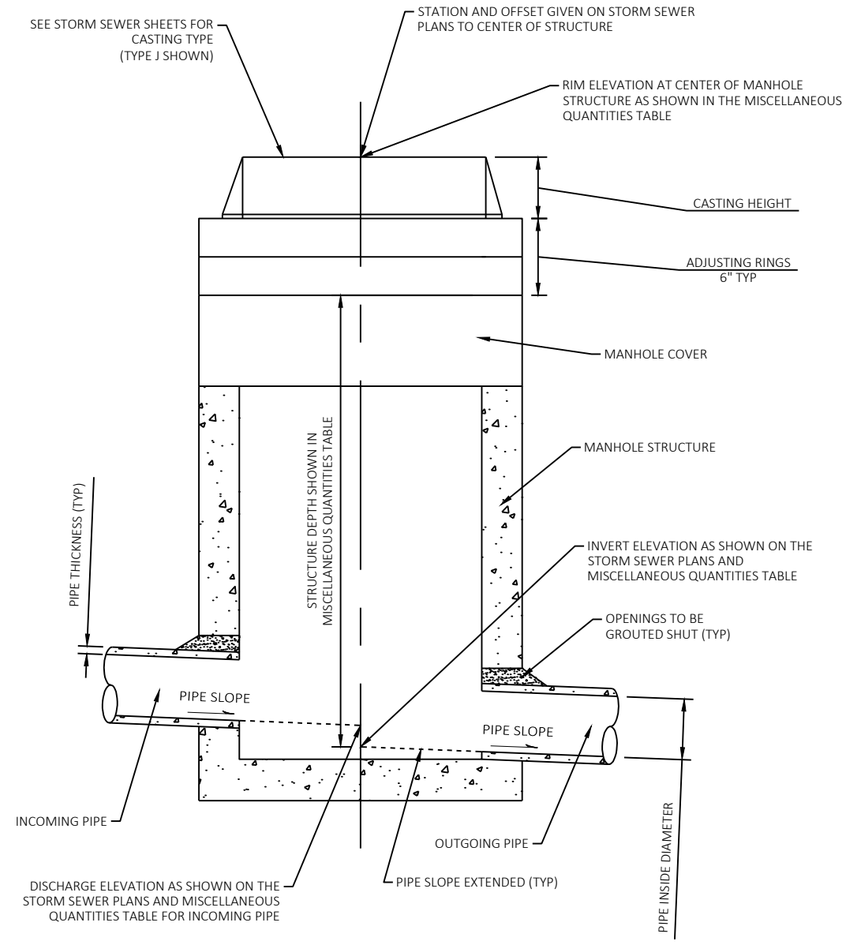

MANHOLES

STRUCTURE DEPTH DEFINITION

RUNOFF COEFFICIENT TABLE

	HYDROLOGIC SOIL GROUP											
	A			B			C			D		
	SLOPE RANGE (%)			SLOPE RANGE (%)			SLOPE RANGE (%)			SLOPE RANGE (%)		
LAND USE:	0-2	2-6	6 & OVER	0-2	2-6	6 & OVER	0-2	2-6	6 & OVER	0-2	2-6	6 & OVER
ROW CROPS	.08 .22	.16 .30	.22 .38	.12 .26	.20 .34	.27 .44	.15 .30	.24 .37	.33 .50	.19 .34	.28 .41	.38 .56
MEDIAN STRIP-TURF	.19 .24	.20 .26	.24 .30	.19 .25	.22 .28	.26 .33	.20 .26	.23 .30	.30 .37	.20 .27	.25 .32	.30 .40
SIDE SLOPE: TURF			.25 .32			.27 .34			.28 .36			.30 .38
PAVEMENT:												
ASPHALT	.70 - .95											
CONCRETE	.80 - .95											
BRICK	.70 - .80											
DRIVES, WALKS	.75 - .85											
ROOFS	.75 - .95											
GRAVEL ROADS, SHOULDERS	.40 - .60											

TOTAL PROJECT AREA = 47.9 ACRES
TOTAL AREA EXPECTED TO BE DISTURBED BY CONSTRUCTION ACTIVITIES = 37.6 ACRES

NOTES:
17 ROCK BAGS MINIMUM PER 8' OPENING.

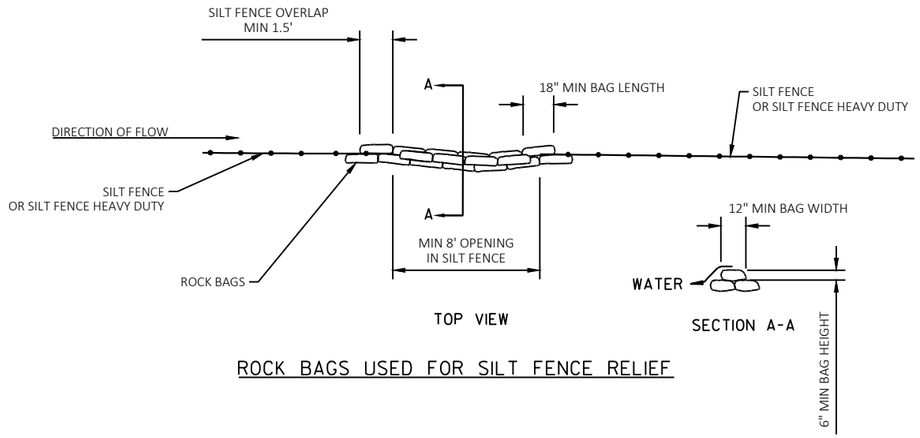

ROCK BAGS USED FOR SILT FENCE RELIEF

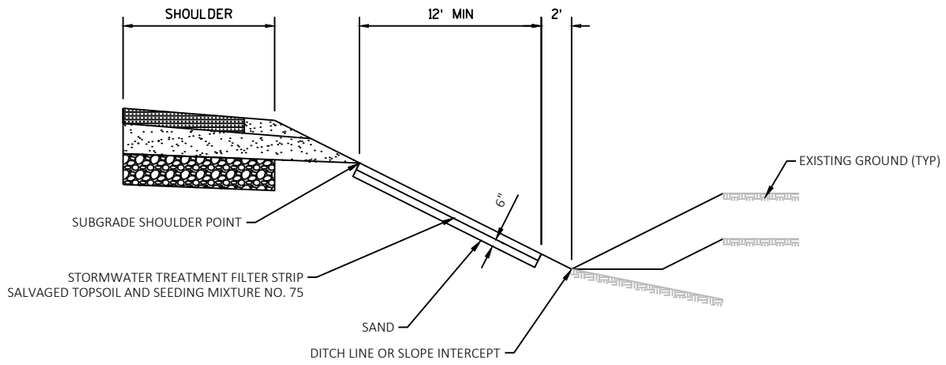

STORMWATER TREATMENT FILTER STRIPS
SEE PLANS FOR LOCATIONS

NOTES:
CULVERT PIPE CHECKS ARE PAID BY EACH INDIVIDUAL ROCK BAG.

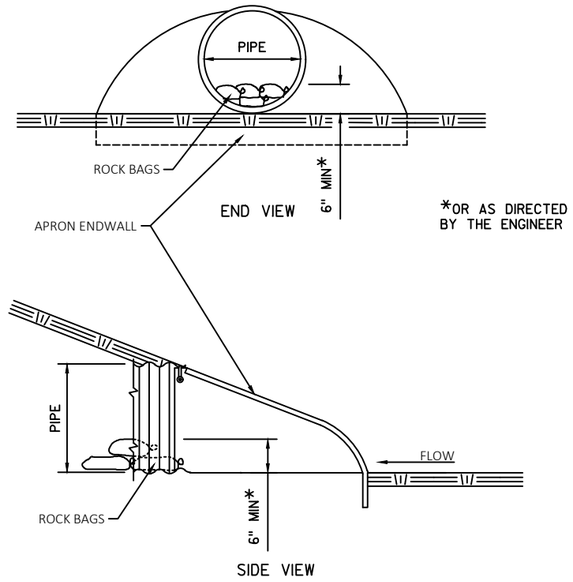

CULVERT PIPE CHECK

ESTIMATED BAG SIZE = 18" X 12" X 6"	
PIPE SIZE	ESTIMATED NUMBER OF BAGS
12"	1
15"	2
18"	2
21"	3
24"	3
30"	5
24"X38" HE	7
29"X42" HE	10
29"X45" HE	10
43"X68" HE	13

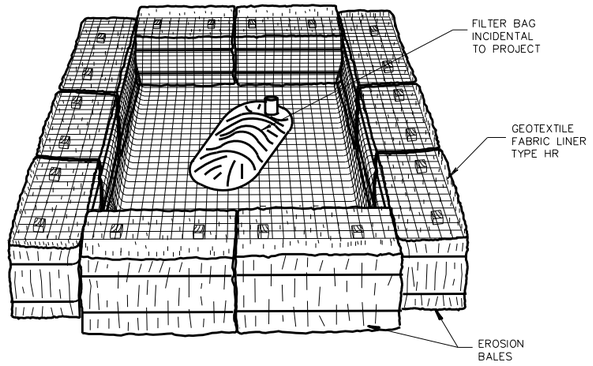

NOTE:

GEOTEXTILE FABRIC AND EROSION BALES
WILL BE PAID UNDER THE ITEMS
"GEOTEXTILE TYPE HR" AND "EROSION BALES"

TEMPORARY SETTLING BASIN

(SIZE TO BE DETERMINED IN FIELD AS INDICATED BELOW:)

STORAGE VOLUME (C.F.) = 16 X GPM (PUMP RATE)

EXAMPLE:
CONTRACTOR INDICATES PUMP CAPABLE OF 50 GPM
HEIGHT OF BALES = 1.5 FT.

SOLUTION:
SV (C.F.) = 16 X 50
SV = 800 C.F.

$\frac{800 \text{ C.F.}}{1.5 \text{ FT.}}$ = 533 S.F.

USE A 20 FT. X 27 FT. BASIN

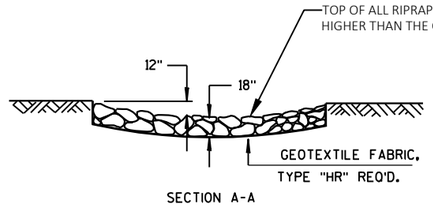

SECTION A-A

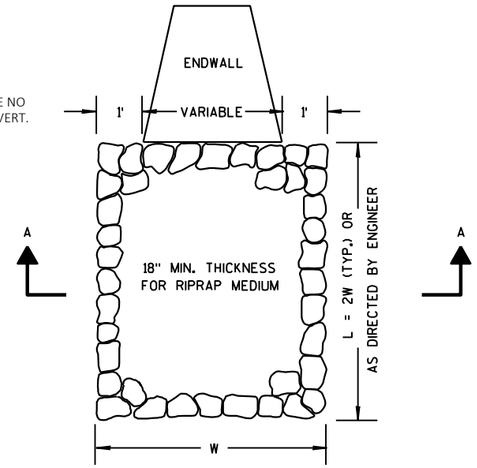

RIPRAP MEDIUM TREATMENT AT PIPE OUTFALLS

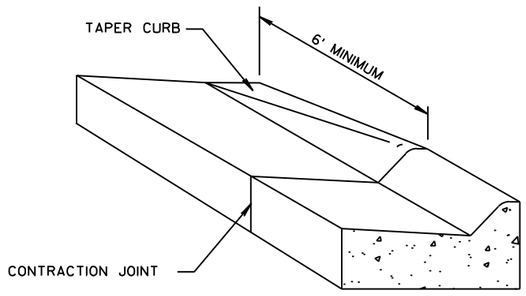

DETAIL OF CURB & GUTTER TERMINI

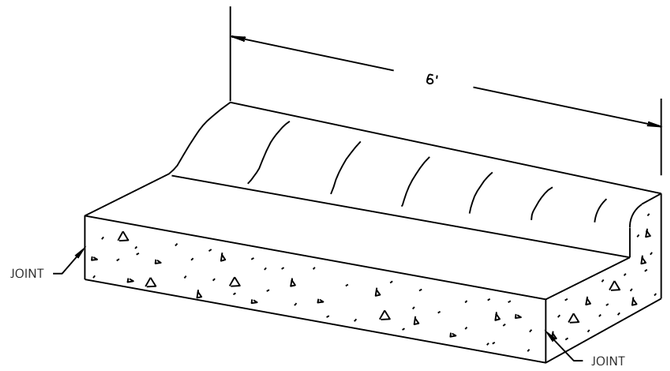

TRANSITION DETAIL

36" TYPE "D" CURB & GUTTER TO 30" TYPE "D" CURB & GUTTER
(TO BE MEASURED & PAID FOR AS 36" CONC. C&G TYPE D)

PROJECT NO: RD16-003	HWY: CTH S	COUNTY: KENOSHA	CONSTRUCTION DETAILS	SHEET 13	E

NOTES:
1. SEE STANDARD DETAIL DRAWING "SILT FENCE" FOR TRENCH, ANCHOR, AND BACKFILL DETAILS.
2. FASTEN GEOTEXTILE FABRIC TO THE ROADWAY SIDE OF THE FENCE.
3. THROUGH WETLAND AREAS ANCHOR THE HEAVY DUTY SILT FENCE TO THE EXISTING GROUND WITH ROCK BAGS LAID END TO END WITH NO GAPS. ANCHORING IS INCIDENTAL TO HEAVY DUTY SILT FENCE.

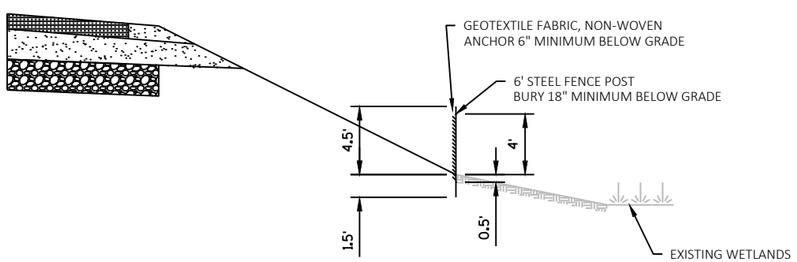

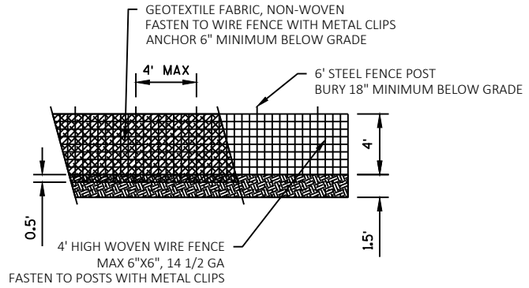

UPLAND OF WETLANDS

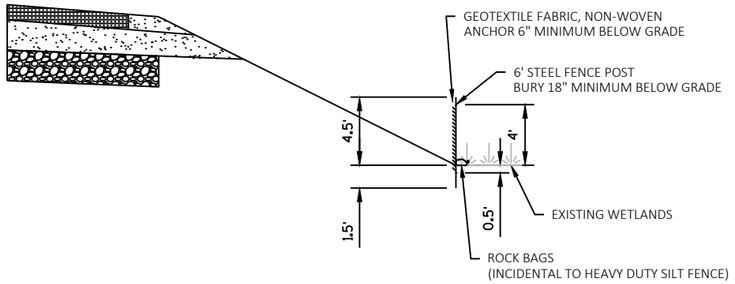

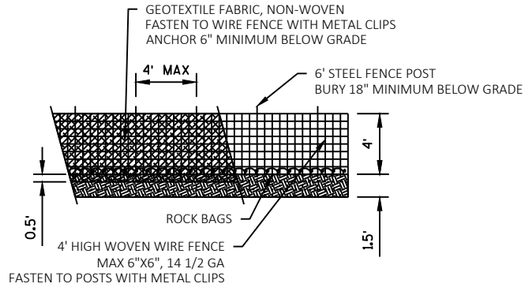

THROUGH WETLANDS

HEAVY DUTY SILT FENCE
SEE PLANS FOR LOCATIONS

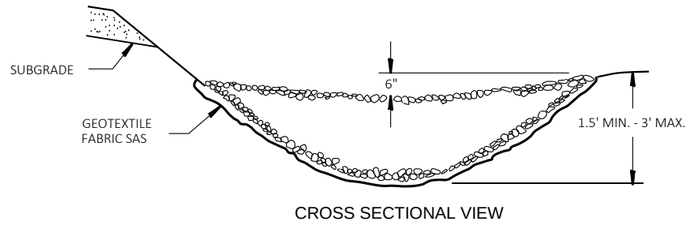

CROSS SECTIONAL VIEW

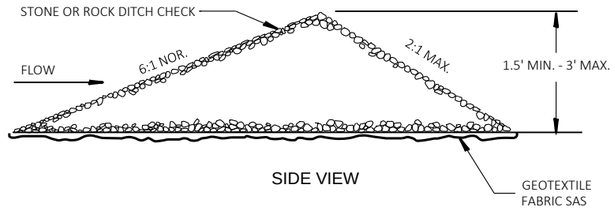

SIDE VIEW

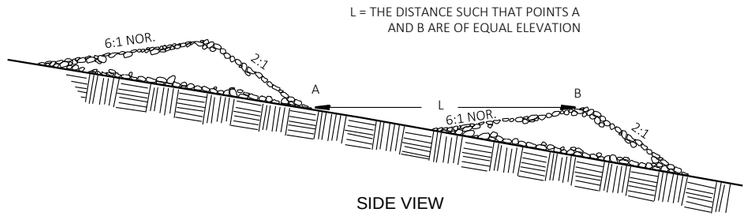

SIDE VIEW

PERMANENT STONE DITCH CHECK

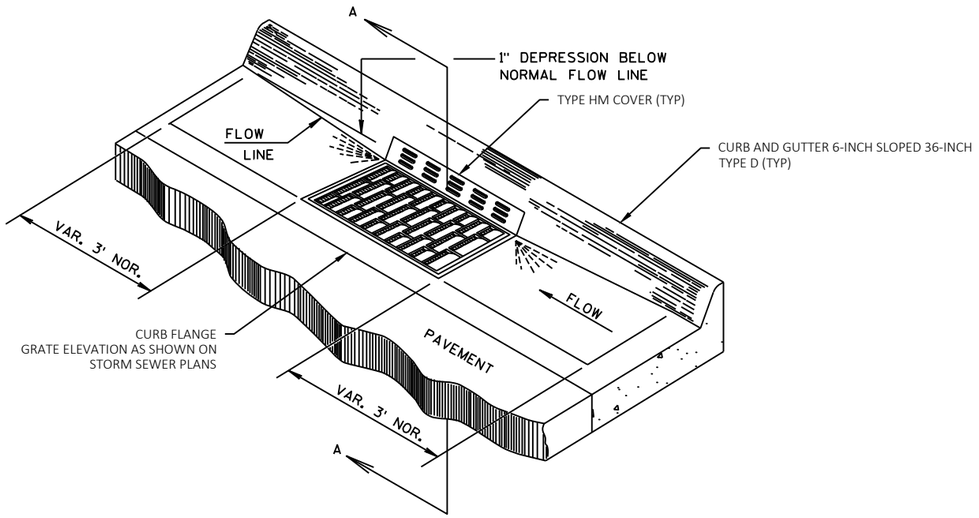

CURB AND GUTTER AT LOW POINT INLETS

(TYPE HM INLET SHOWN)

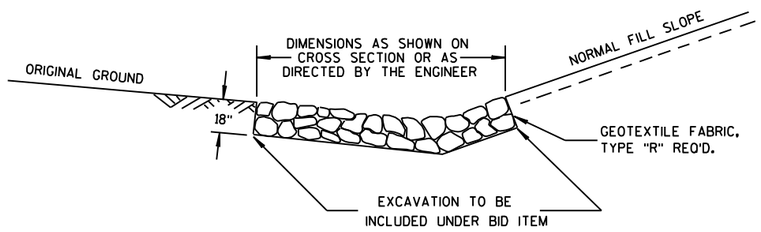

RIPRAP MEDIUM IN DITCHES

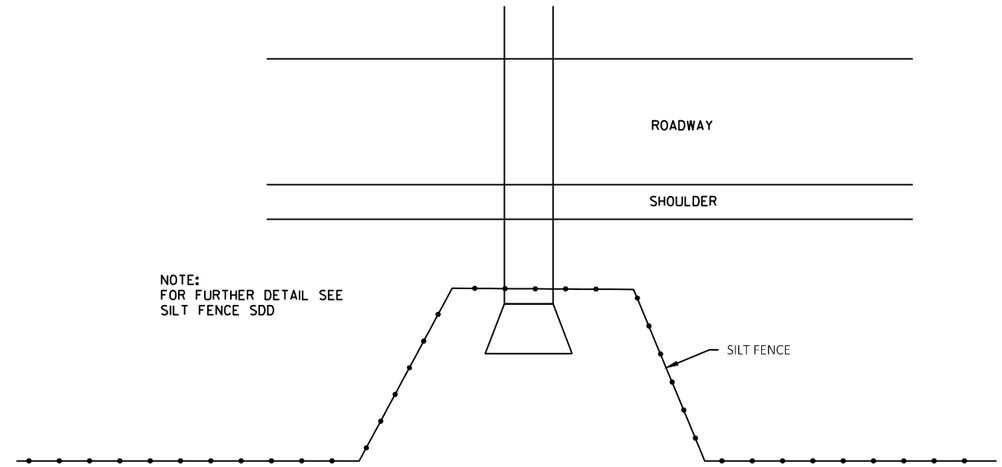

TYPICAL SILT FENCE DETAIL AT PIPE INLET

2

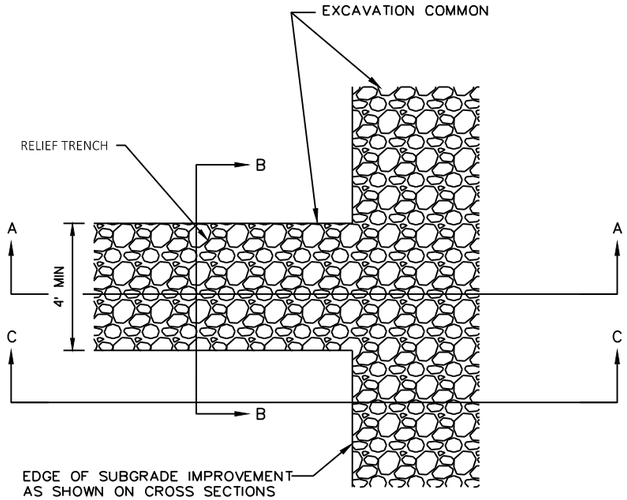

PLAN VIEW

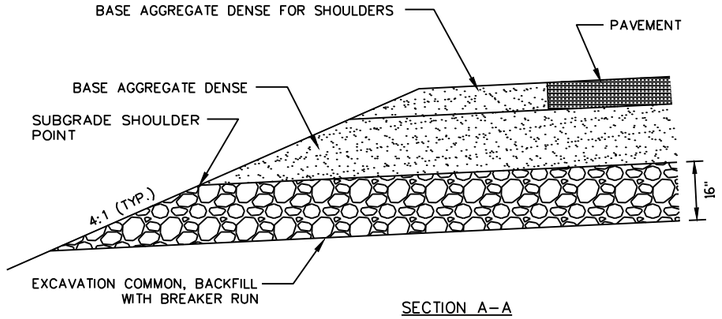

SECTION A–A

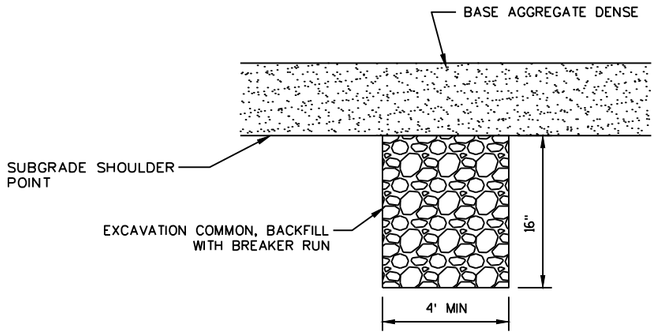

SECTION B–B

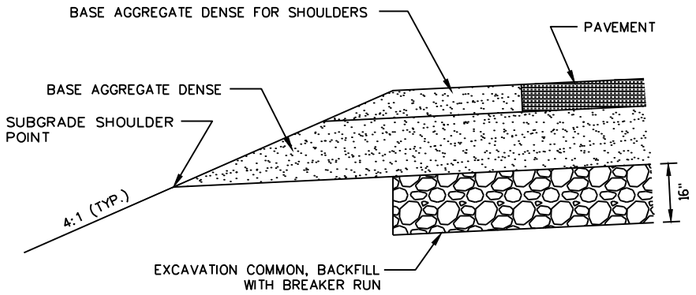

SECTION C–C

1. EXCAVATION REQUIRED FOR SUBGRADE IMPROVEMENT SHALL BE PAID FOR AS EXCAVATION COMMON.
2. FILL SUBGRADE IMPROVEMENT VOID WITH BREAKER RUN.
3. CONSTRUCT RELIEF TRENCHES AT LEAST EVERY 250' AND AT THE LOW POINT WITHIN EACH SAG VERTICAL CURVE IN THE PROFILE.
4. EXCAVATION REQUIRED TO CONSTRUCT RELIEF TRENCHES INCLUDED IN THE ITEM EXCAVATION COMMON.

RELIEF TRENCH

STA 40+50'EB' RT
STA 43+00'EB' RT
STA 60+50'EB' RT
STA 63+00'EB' RT
STA 64+25'EB' RT
STA 66+50'EB' RT
STA 75+50'EB' RT
STA 101+00'EB' RT

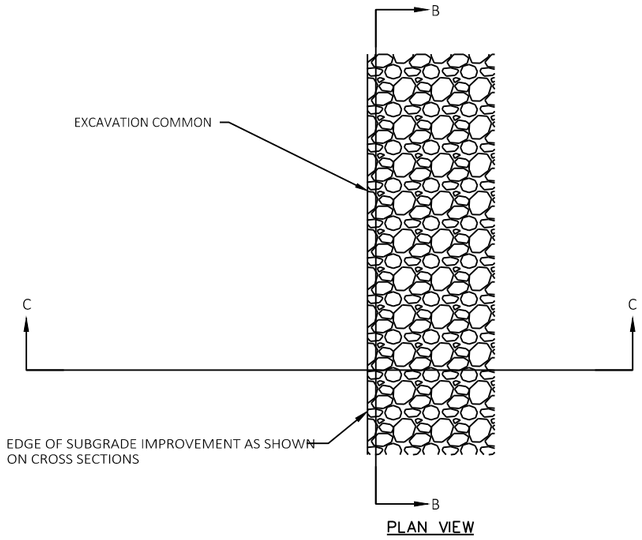

PLAN VIEW

1. EXCAVATION REQUIRED FOR SUBGRADE IMPROVEMENT SHALL BE PAID FOR AS EXCAVATION COMMON.
2. FILL SUBGRADE IMPROVEMENT VOID WITH BREAKER RUN.
3. CONSTRUCT RELIEF TRENCHES AT LEAST EVERY 250' AND AT THE LOW POINT WITHIN EACH SAG VERTICAL CURVE IN THE PROFILE.
4. EXCAVATION REQUIRED TO CONSTRUCT RELIEF TRENCHES INCLUDED IN THE ITEM EXCAVATION COMMON.
5. CONNECTIONS AND BENDS FOR ALL UNDERDRAIN PIPES ARE INCIDENTAL.

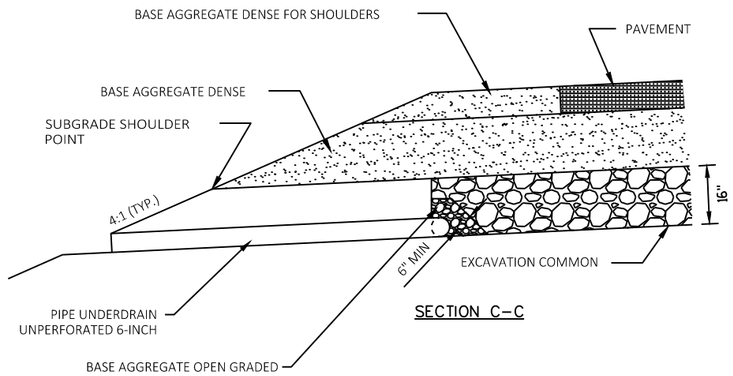

SECTION C–C

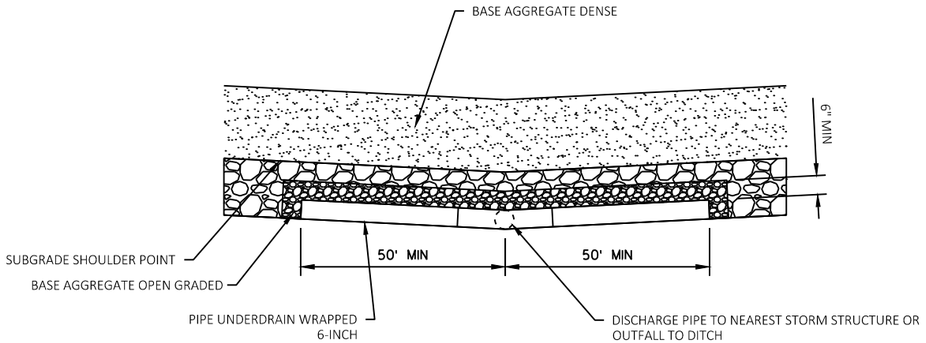

SECTION B-B
LOW POINTS

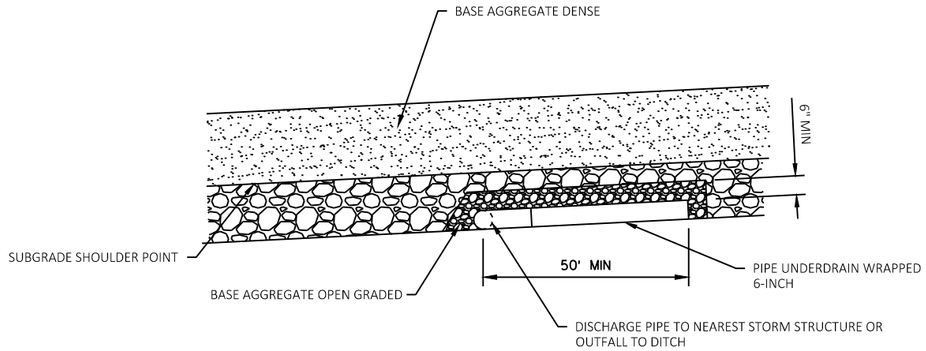

SECTION B-B
ON GRADE

UNDERDRAIN SUBGRADE RELIEF

STA 28+00'WB'	STA 72+50'WB'	STA 30+50'EB'	STA 78+00'EB'
STA 30+50'WB'	STA 75+00'WB'	STA 33+00'EB'	STA 80+50'EB'
STA 33+00'WB'	STA 77+50'WB'	STA 35+50'EB'	STA 83+80'EB'
STA 35+50'WB'	STA 80+00'WB'	STA 38+00'EB'	STA 86+50'EB'
STA 38+00'WB'	STA 82+50'WB'	STA 45+50'EB'	STA 93+00'EB'
STA 40+63'WB'	STA 84+46'WB'	STA 48+00'EB'	STA 95+08'EB'
STA 43+00'WB'	STA 87+50'WB'	STA 50+50'EB'	STA 98+00'EB'
STA 45+50'WB'	STA 90+00'WB'	STA 55+50'EB'	STA 104+00'EB'
STA 48+00'WB'	STA 94+00'WB'	STA 58+00'EB'	STA 106+00'EB'
STA 50+50'WB'	STA 95+55'WB'	STA 70+50'EB'	STA 109+50'EB'
STA 55+50'WB'	STA 98+00'WB'	STA 73+00'EB'	STA 112+00'EB'
STA 58+00'WB'	STA 101+00'WB'		
STA 60+50'WB'	STA 104+00'WB'		
STA 63+00'WB'	STA 106+00'WB'		
STA 65+64'WB'	STA 109+50'WB'		
STA 70+00'WB'	STA 112+00'WB'		

2

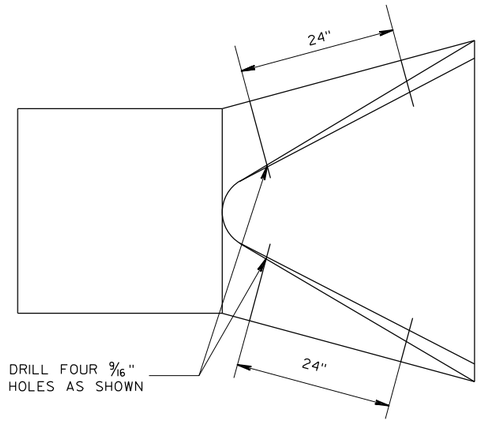

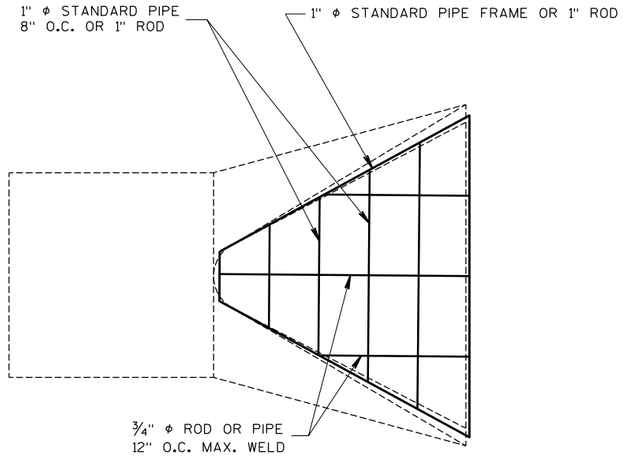

AT EACH PIPE

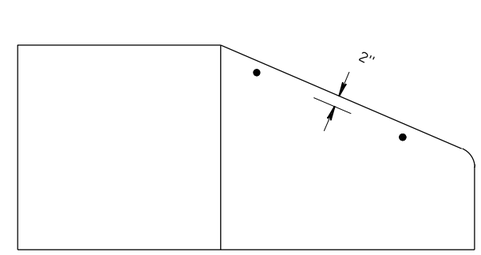

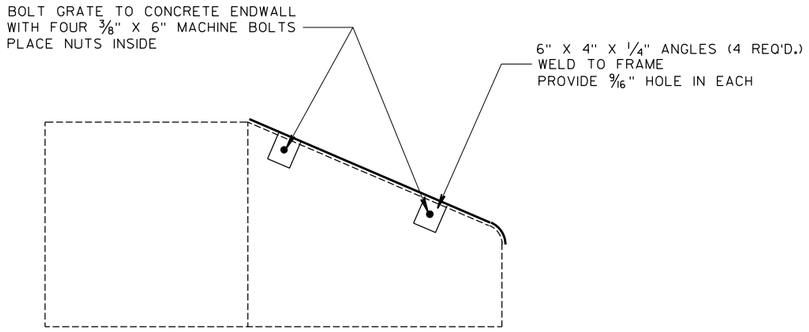

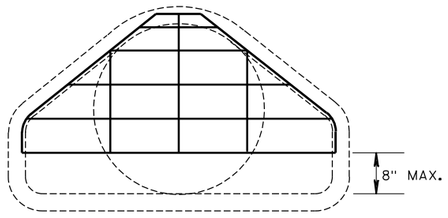

PIPE GRATE

SEE MISCELLANEOUS QUANTITIES FOR LOCATIONS

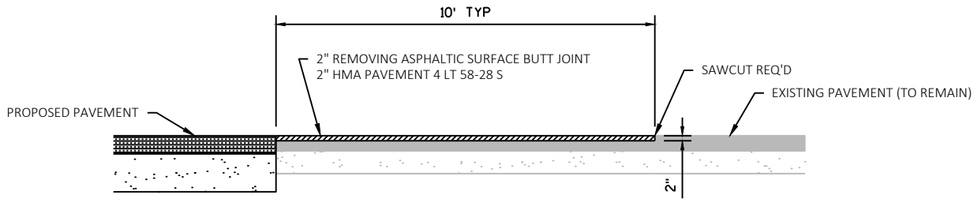

BUTT JOINTS

STA 403+50 102ND AVE
STA 503+50 100TH AVE
STA 615+43 96TH AVE

NOTES

1. EMBANKMENT PLACED IN LAYERS AND COMPACTED PER SPECIFICATIONS.
2. BENCH AS REQUIRED TO FACILITATE CONSTRUCTION FILLING OPERATIONS (2' BENCH DEPTH, INCIDENTAL).
3. EBS AS REQUIRED IN THE PLANS OR DIRECTED BY THE ENGINEER SHALL BE PAID UNDER THE ITEM "EXCAVATION COMMON".

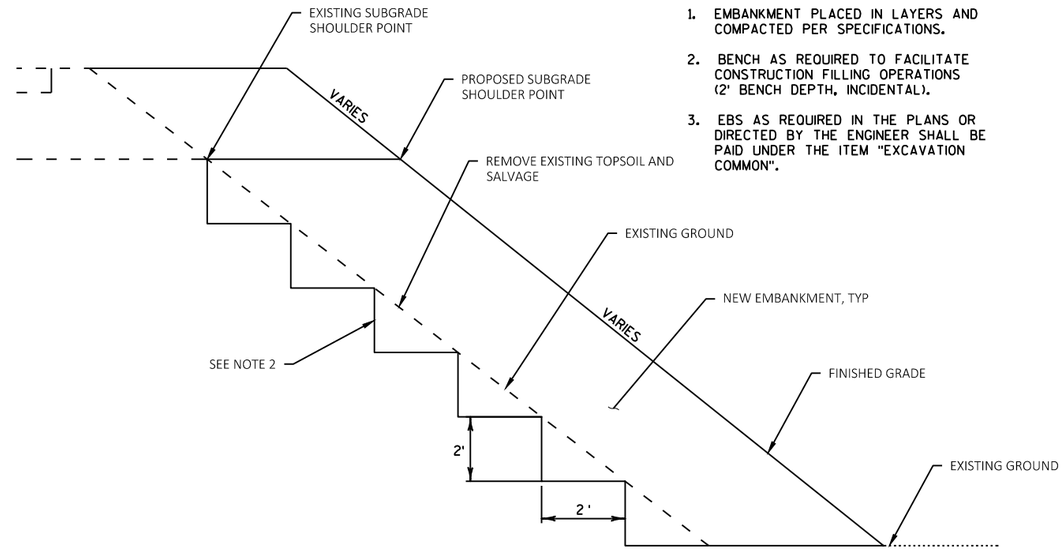

STEPPED EMBANKMENT

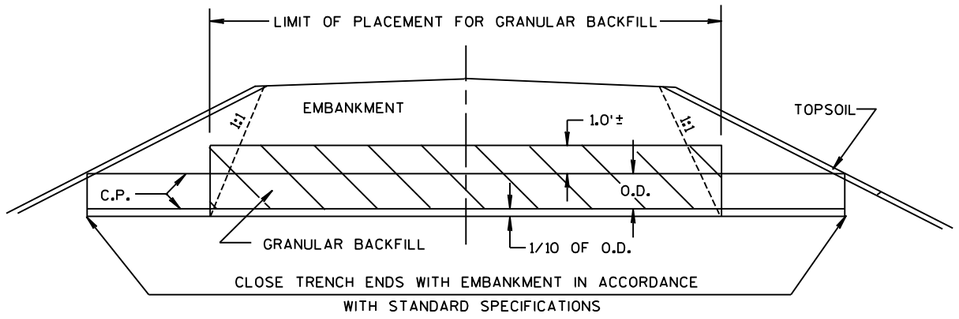

CULVERT BACKFILL DETAIL

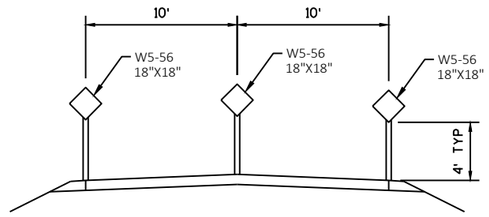

END OF ROADWAY SIGNING

96TH AVE
(LOOKING SOUTH)

PROJECT NO: RD16-003	HWY: CTH S	COUNTY: KENOSHA	CONSTRUCTION DETAILS	SHEET 19	E

FILE NAME : T:\1165811\CIVIL3D\1165811\SHEETSPLAN\021001-CD.DWG
LAYOUT NAME - 10
PLOT DATE : 5/11/2020 12:42 PM
PLOT BY : GUILLAMA, TINA
PLOT NAME :
PLOT SCALE : 1 IN:10 FT_1
WISDOT/CADDS SHEET 42

NOTES:
1. SEE STANDARD DETAIL DRAWING "SILT FENCE" FOR TRENCH, ANCHOR, AND BACKFILL DETAILS.
2. FASTEN GEOTEXTILE FABRIC TO THE ROADWAY SIDE OF THE FENCE.
3. THROUGH WETLAND AREAS ANCHOR THE HEAVY DUTY SILT FENCE TO THE EXISTING GROUND WITH ROCK BAGS LAID END TO END WITH NO GAPS. ANCHORING IS INCIDENTAL TO HEAVY DUTY SILT FENCE.

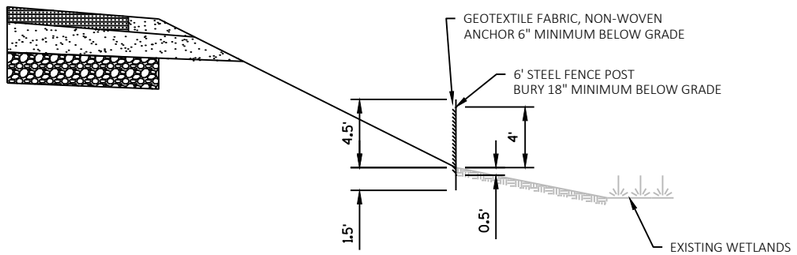

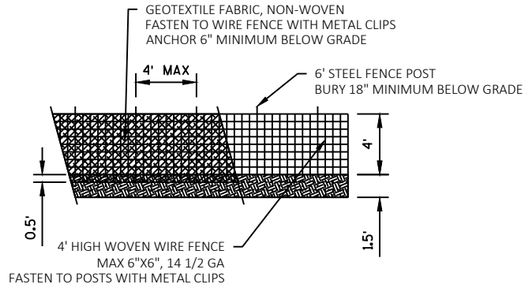

UPLAND OF WETLANDS

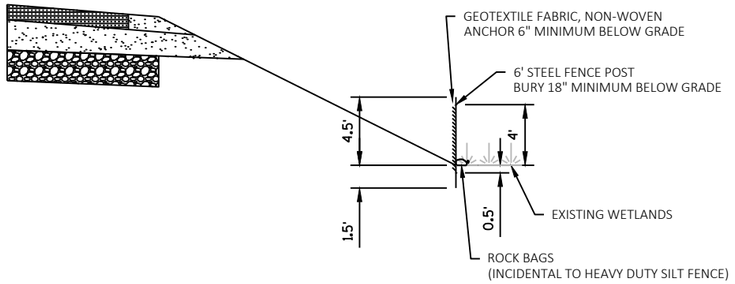

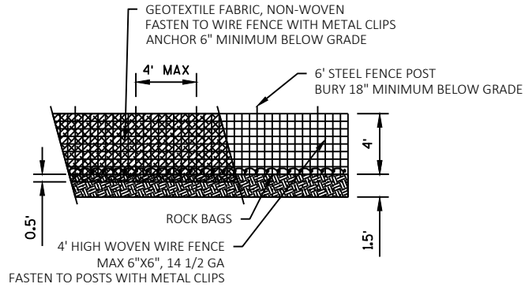

THROUGH WETLANDS

HEAVY DUTY SILT FENCE
SEE PLANS FOR LOCATIONS

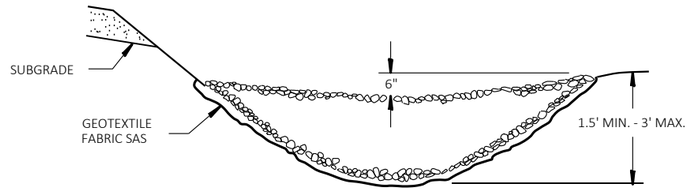

CROSS SECTIONAL VIEW

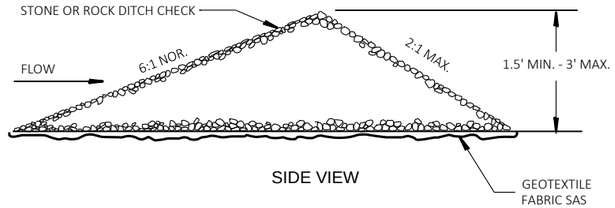

SIDE VIEW

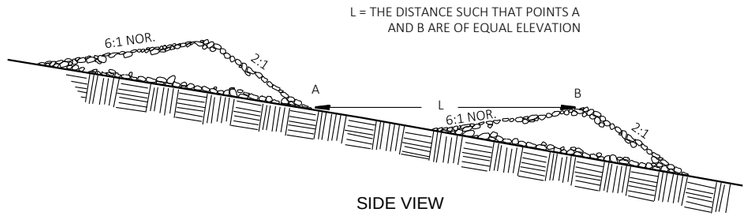

SIDE VIEW

PERMANENT STONE DITCH CHECK

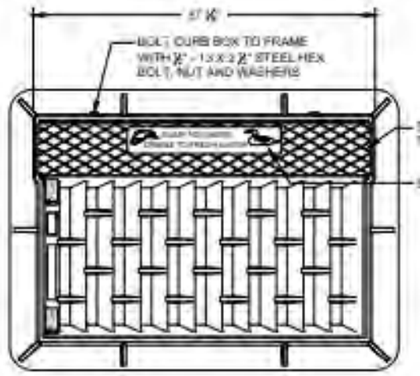

NOTE: EITHER CASTING IS ACCEPTABLE

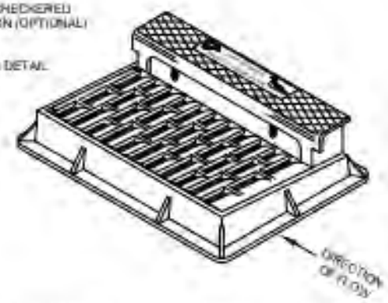

NOTE: CURB BOX HEIGHT ADJUSTABLE 6" - 9"

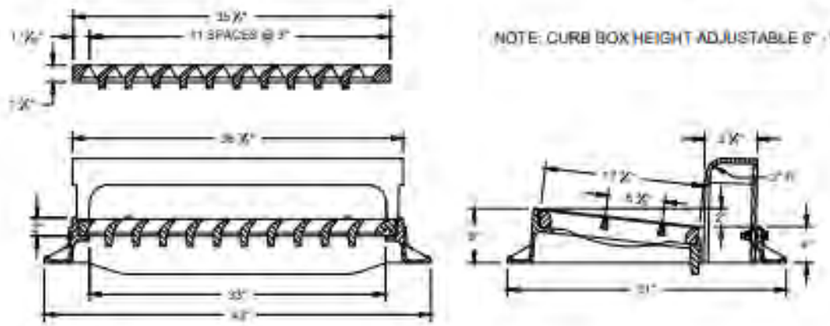

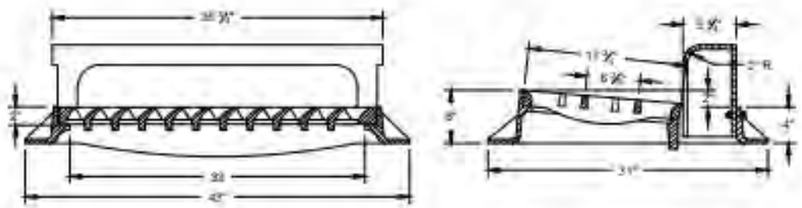

TYPE "H"

NOTE: EITHER CASTING IS ACCEPTABLE

1 ¾" DIAGONAL BARS WITH 1 ¾" OPENINGS

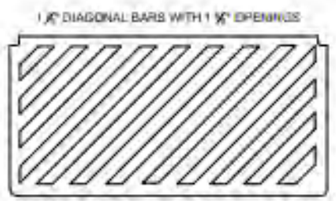

SPECIAL GRATE FOR TYPE "H" COVER

(MEASURES 15" X 17 ¾" X 2")

(NOTED AS TYPE H-S ON DRAINAGE TABLE)

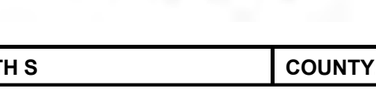

LOGO DETAIL

GENERAL NOTES

DETAILS OF CONSTRUCTION, MATERIALS AND WORKMANSHIP NOT SHOWN ON THIS DRAWING SHALL CONFORM TO THE PERTINENT REQUIREMENTS OF THE STANDARD SPECIFICATIONS AND THE APPLICABLE SPECIAL PROVISIONS.

DETAIL DRAWINGS FOR PROPOSED ALTERNATE DESIGNS FOR CATCH BASIN, MANHOLE AND INLET COVERS SHALL BE SUBMITTED TO THE ENGINEER FOR APPROVAL PROVIDING THAT SUCH ALTERNATE DESIGNS MAKE PROVISION FOR EQUIVALENT CAPACITY AND STRENGTH.

ROUND FRAMES AND COVERS SHALL HAVE CONTINUOUSLY MACHINED BEARING SURFACES TO PREVENT ROCKING AND RATTLING.

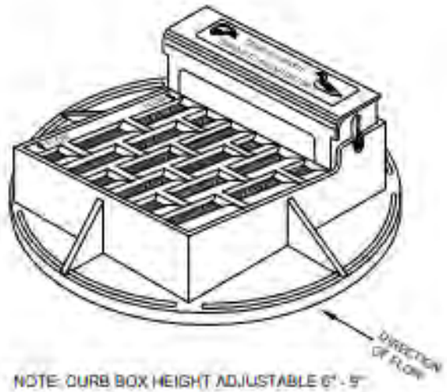

NOTE: CURB BOX HEIGHT ADJUSTABLE 6" - 9"

NOTE: EITHER CASTING IS ACCEPTABLE

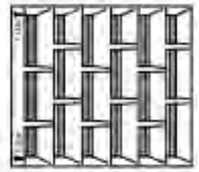

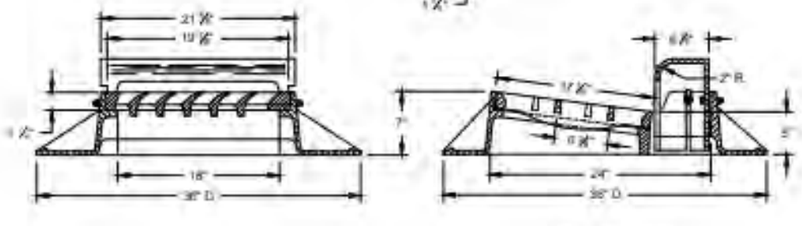

TYPE "A"

1" DIAGONAL BARS WITH 1 ¾" OPENINGS

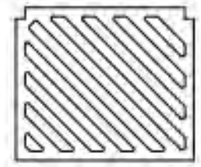

SPECIAL GRATE FOR TYPE "A" COVER

(MEASURES 19 ¾" X 17 ¾" X 1 ¾")

(NOTED AS TYPE A-S ON DRAINAGE TABLE)

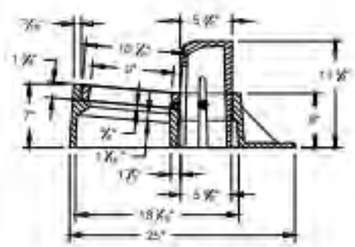

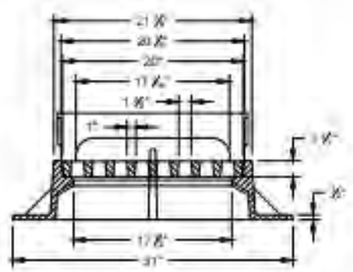

TYPE "Z"

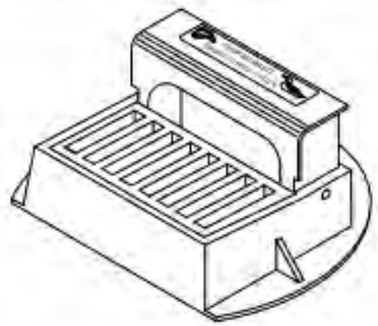

INLET COVERS TYPE A, H, A-S, H-S & Z

PROJECT NO: RD16-003	HWY: CTH S	COUNTY: KENOSHA	CONSTRUCTION DETAILS	SHEET: 21	E

FILE NAME : _____ PLOT DATE : _____ PLOT BY : _____ PLOT NAME : _____ PLOT SCALE : 1:1

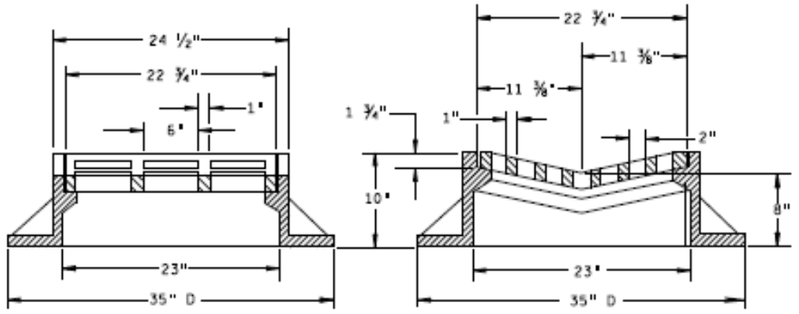

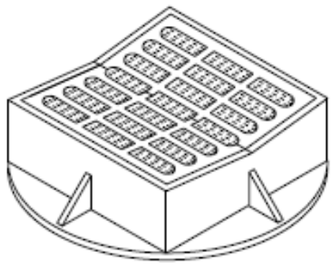

TYPE "B"

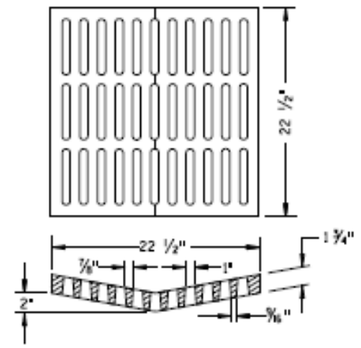

ALTERNATIVE GRATE FOR TYPE "B" COVER

USE WHERE PEDESTRIAN OR BICYCLE TRAFFIC IS POSSIBLE.
NOTED AS TYPE B-A ON THE DRAINAGE TABLE

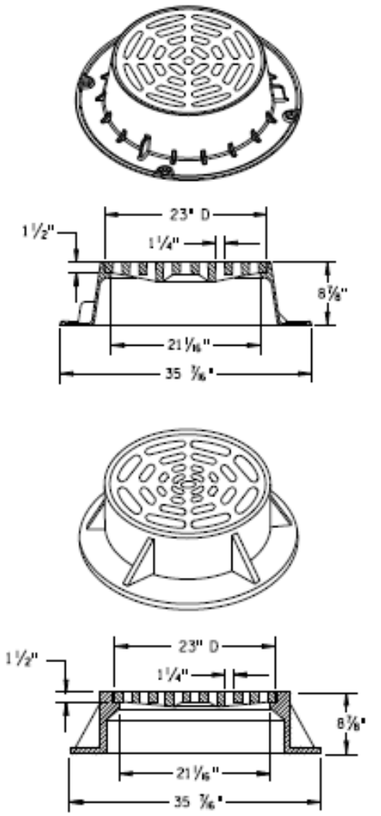

TYPE "C"

NOTE: EITHER CASTING IS ACCEPTABLE

GENERAL NOTES

DETAILS OF CONSTRUCTION, MATERIALS AND WORKMANSHIP NOT SHOWN ON THIS DRAWING SHALL CONFORM TO THE PERTINENT REQUIREMENTS OF THE STANDARD SPECIFICATIONS AND THE APPLICABLE SPECIAL PROVISIONS.

DETAIL DRAWINGS FOR PROPOSED ALTERNATE DESIGNS FOR CATCH BASIN, MANHOLE AND INLET COVERS SHALL BE SUBMITTED TO THE ENGINEER FOR APPROVAL PROVIDING THAT SUCH ALTERNATE DESIGNS MAKE PROVISION FOR EQUIVALENT CAPACITY AND STRENGTH.

ROUND FRAMES AND COVERS SHALL HAVE CONTINUOUSLY MACHINED BEARING SURFACES TO PREVENT ROCKING AND RATTLING.

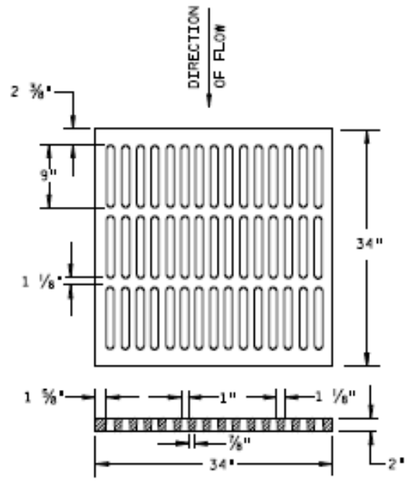

ALTERNATIVE TYPE "MS"

USE WHERE PEDESTRIAN OR BICYCLE TRAFFIC IS PERMITTED
NOTED AS TYPE MS-A ON THE DRAINAGE TABLE

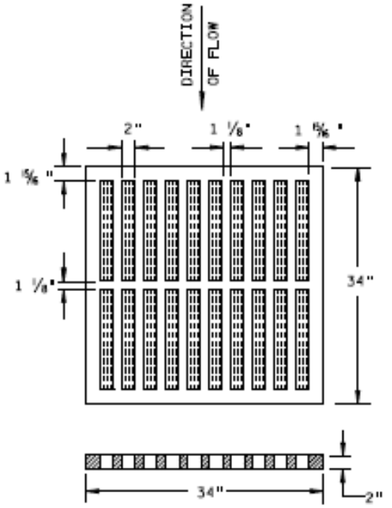

TYPE "MS"

USE ON FREEWAYS AND EXPRESSWAYS
NOTED AS TYPE MS ON DRAINAGE TABLE

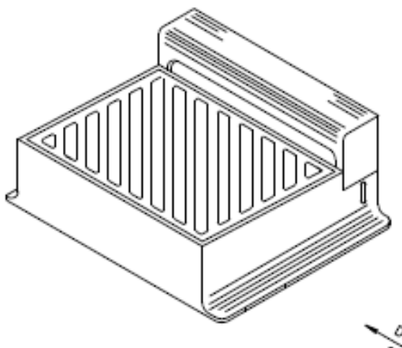

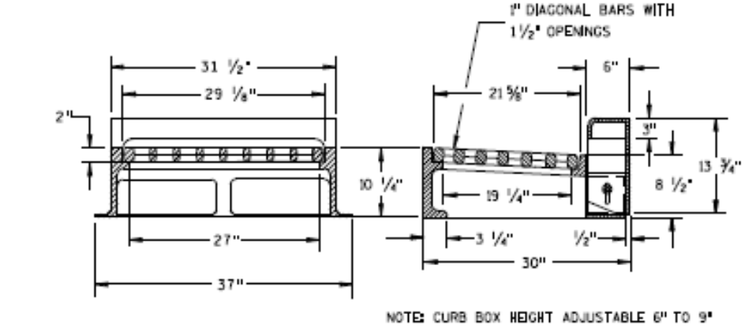

NOTE: CURB BOX HEIGHT ADJUSTABLE 6" TO 9"

TYPE "WM"

DIRECTION OF FLOW

DIAGONAL SLOTS, SHALL BE ORIENTED TO THE DIRECTION OF FLOW AS ILLUSTRATED. GRATES ARE MANUFACTURED TO BE REVERSIBLE.

INLET COVERS
TYPE B, B-A, C,
MS, MS-A, & WM

PROJECT NO: RD16-003	HWY: CTH S	COUNTY: KENOSHA	CONSTRUCTION DETAILS	SHEET: 22	E

FILE NAME : _____ PLOT DATE : _____ PLOT BY : _____ PLOT NAME : _____ PLOT SCALE : 1:1

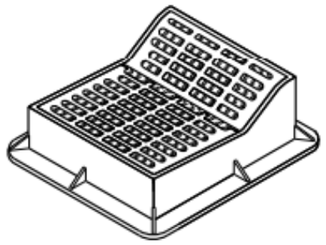

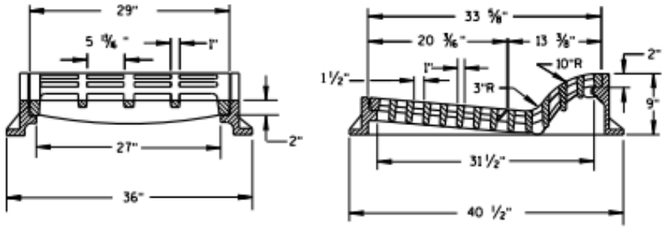

TYPE "F"

USE WITH TYPES A & D CONCRETE CURB & GUTTER, 36 INCH.

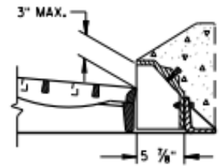

ALTERNATIVE CURB BOX FOR TYPE "HM" COVER

USE WITH TYPES G & J CONCRETE CURB & GUTTER, 30 INCH
NOTED AS TYPE HM-GJ ON DRAINAGE TABLE

NOTE:
SPECIAL GRATE FOR THE
TYPE "H" COVER MAY ALSO BE
USED FOR THE TYPE "HM-GJ" COVER
NOTED AS TYPE HM-GJ-S ON DRAINAGE TABLE

GENERAL NOTES

DETAILS OF CONSTRUCTION, MATERIALS AND WORKMANSHIP NOT SHOWN ON THIS DRAWING SHALL CONFORM TO THE PERTINENT REQUIREMENTS OF THE STANDARD SPECIFICATIONS AND THE APPLICABLE SPECIAL PROVISIONS.

DETAIL DRAWINGS FOR PROPOSED ALTERNATE DESIGNS FOR INLET COVERS SHALL BE SUBMITTED TO THE ENGINEER FOR APPROVAL PROVIDING THAT SUCH ALTERNATE DESIGNS MAKE PROVISION FOR EQUIVALENT CAPACITY AND STRENGTH.

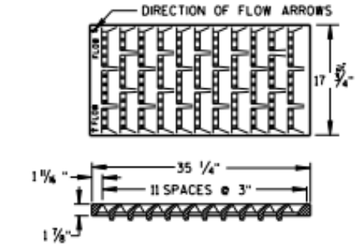

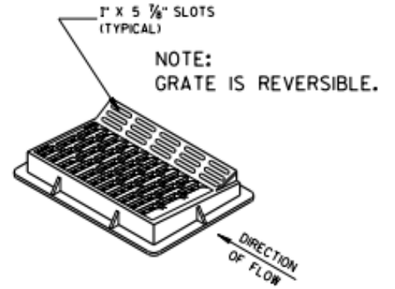

NOTE:
GRATE IS REVERSIBLE.

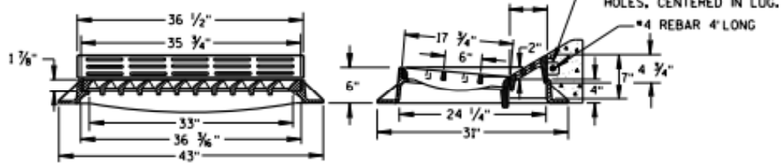

TYPE "HM"

USE WITH TYPES A & D CONCRETE CURB & GUTTER, 36 INCH.

NOTE:
SPECIAL GRATE FOR THE
TYPE "H" COVER MAY ALSO BE
USED FOR THE TYPE "HM" COVER
NOTED AS TYPE HM-S ON DRAINAGE TABLE

TYPE "S"

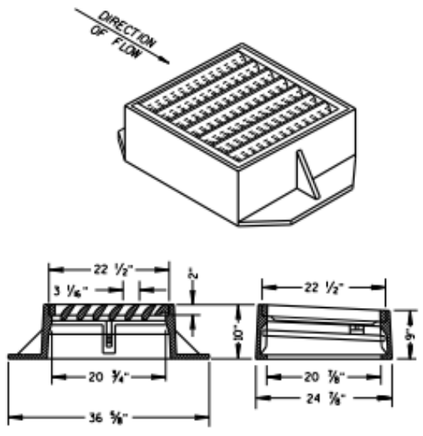

TYPE "V"

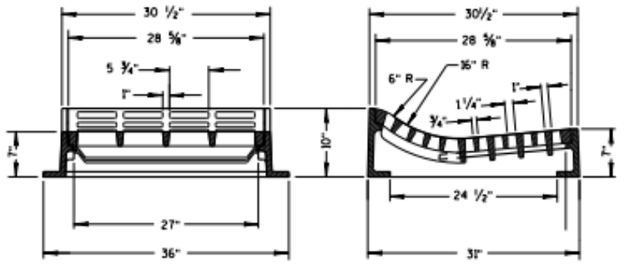

TYPE "T"

USE WITH TYPES R & T CONCRETE CURB & GUTTER, 36 INCH.

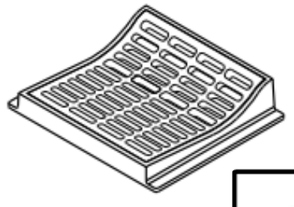

INLET COVERS
TYPE F, HM, HM-S, S, T, V, HM-GJ, & HM-GJ-S

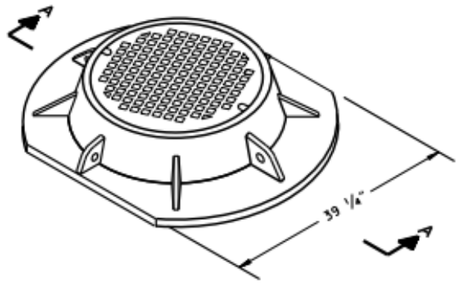

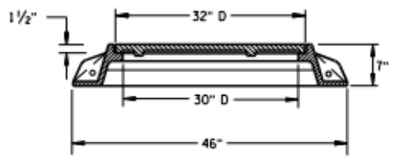

SECTION A-A
TYPE "K"

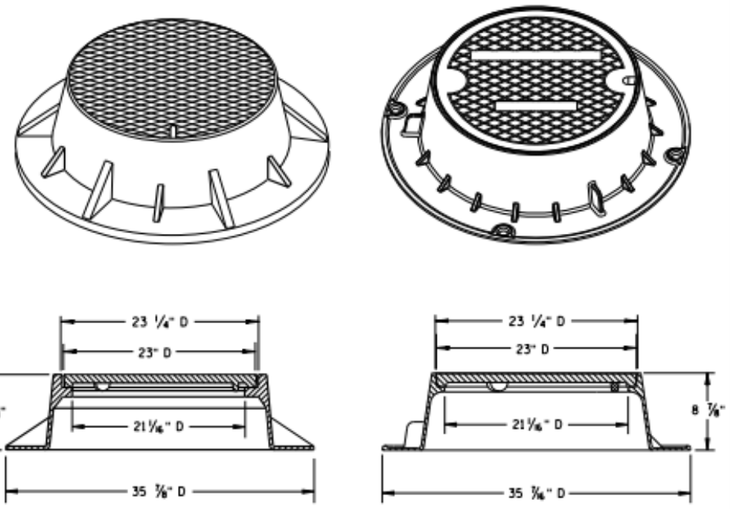

TYPE "J"
NOTE: EITHER CASTING IS ACCEPTABLE

GENERAL NOTES

DETAILS OF CONSTRUCTION, MATERIALS AND WORKMANSHIP NOT SHOWN ON THIS DRAWING SHALL CONFORM TO THE PERTINENT REQUIREMENTS OF THE STANDARD SPECIFICATIONS AND THE APPLICABLE SPECIAL PROVISIONS.

DETAIL DRAWINGS FOR PROPOSED ALTERNATE DESIGNS FOR MANHOLE COVERS SHALL BE SUBMITTED TO THE ENGINEER FOR APPROVAL PROVIDING THAT SUCH ALTERNATE DESIGNS MAKE PROVISION FOR EQUIVALENT CAPACITY AND STRENGTH.

ROUND FRAMES AND COVERS SHALL HAVE CONTINUOUSLY MACHINED BEARING SURFACES TO PREVENT ROCKING AND RATTLING.

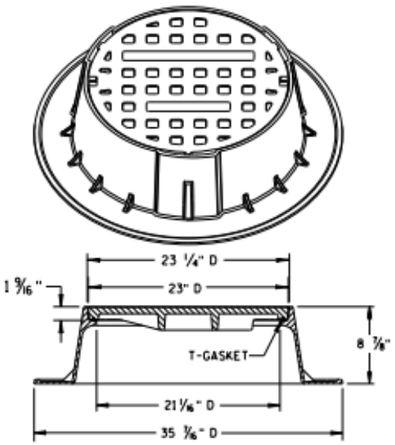

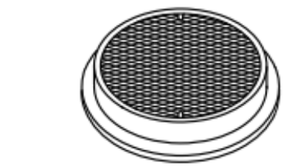

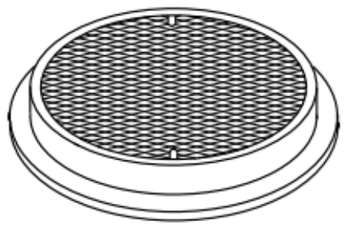

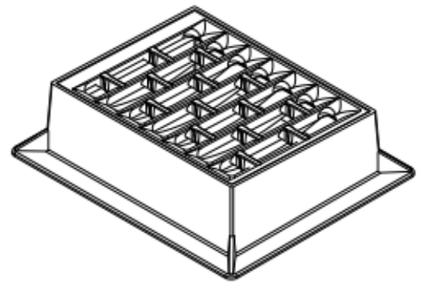

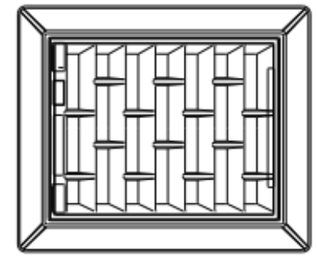

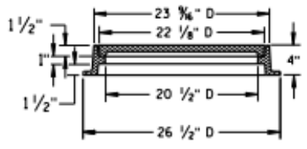

TYPE "L"

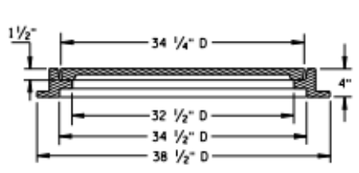

TYPE "M"

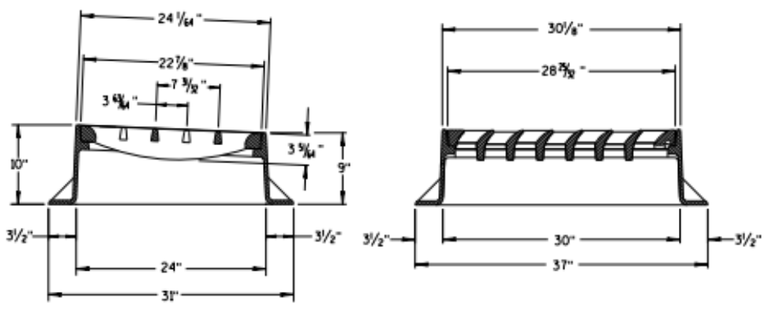

INLET COVER TYPE "BW"

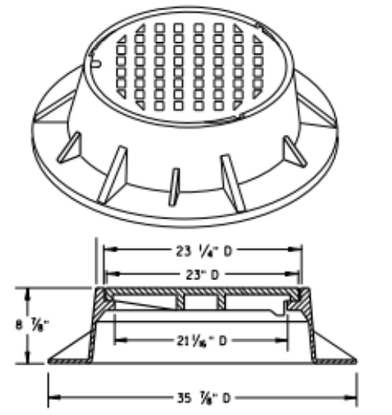

TYPE "J" SPECIAL
TYPE "B" NON-ROCKING SELF-SEAL LID
(NOTED AS TYPE J-S ON THE DRAINAGE TABLE)
NOTE: EITHER CASTING IS ACCEPTABLE

INLET COVER TYPE BW
MANHOLE COVERS, TYPE K, J, J-S, L & M

PROJECT NO: RD16-003	HWY: CTH S	COUNTY: KENOSHA	CONSTRUCTION DETAILS	SHEET: 24	E

FILE NAME : _____ PLOT DATE : _____ PLOT BY : _____ PLOT NAME : _____ PLOT SCALE : 1:1

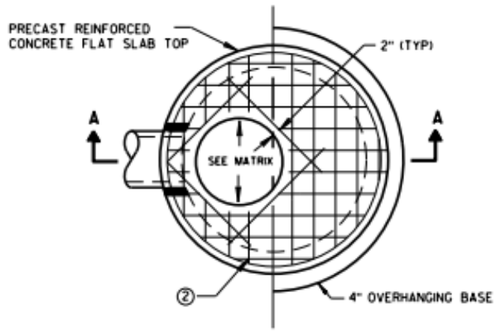

PLAN VIEW CIRCULAR OPENING

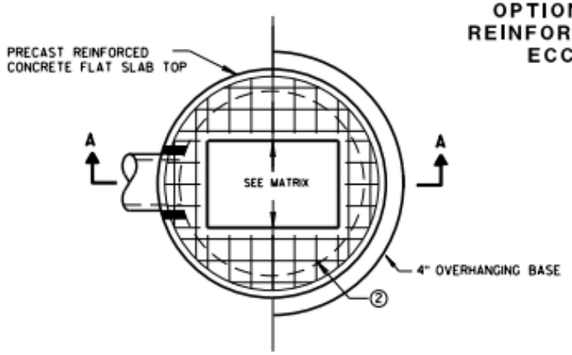

PLAN VIEW RECTANGULAR OPENING

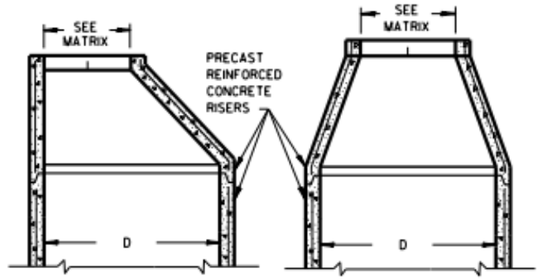

OPTIONAL PRECAST REINFORCED CONCRETE ECCENTRIC TOP

OPTIONAL PRECAST REINFORCED CONCRETE CONCENTRIC TOP

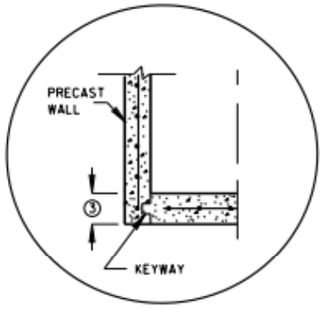

PRECAST REINFORCED CONCRETE WITH INTEGRAL BASE OPTION

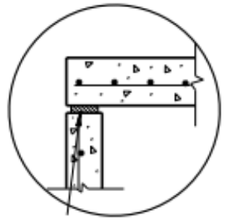

TOP WITH PLAIN END JOINT

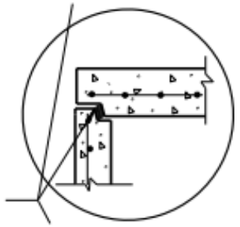

TOP WITH TONGUE AND GROOVE JOINT

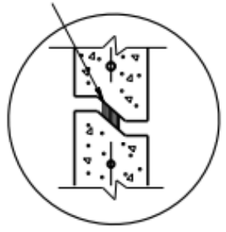

RISER WITH TONGUE AND GROOVE JOINT

DETAIL "B"

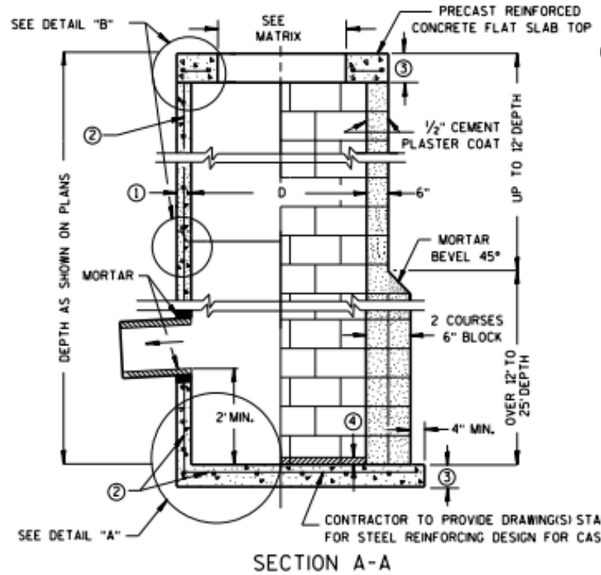

SECTION A-A

PRECAST REINFORCED CONCRETE WITH MONOLITHIC BASE

CONCRETE BLOCK WITH CAST-IN-PLACE OR PRECAST REINFORCED CONCRETE BASE ②

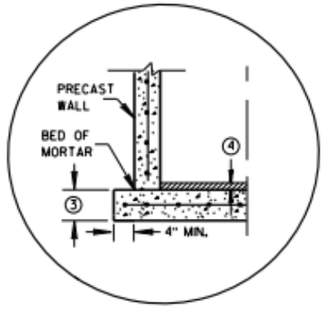

SEPARATE PRECAST REINFORCED CONCRETE BASE OPTION

DETAIL "A"

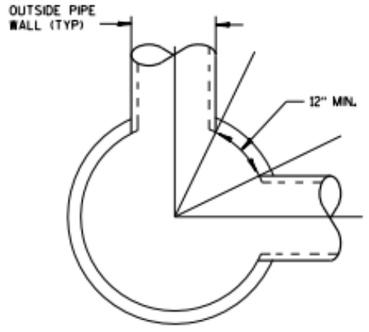

DETAIL "C"

GENERAL NOTES

DETAILS OF CONSTRUCTION, MATERIALS AND WORKMANSHIP NOT SHOWN ON THIS DRAWING SHALL CONFORM TO THE PERTINENT REQUIREMENTS OF THE STANDARD SPECIFICATIONS AND THE APPLICABLE SPECIAL PROVISIONS.

UNLESS OTHERWISE AUTHORIZED IN WRITING BY THE ENGINEER, THE CONTRACTOR SHALL NOT ORDER AND DELIVER PRECAST CATCH BASIN UNITS REQUIRED FOR THE PROJECT UNTIL A LIST OF SIZES IS FURNISHED BY THE ENGINEER.

DETAILED DRAWINGS FOR PROPOSED ALTERNATE DESIGNS FOR UNDERGROUND DRAINAGE STRUCTURES SHALL BE SUBMITTED TO THE ENGINEER FOR APPROVAL PROVIDING THAT SUCH ALTERNATE DESIGNS MAKE PROVISION FOR EQUIVALENT CAPACITY AND STRENGTH.

ALL DRAINAGE STRUCTURES ARE DESIGNATED ON THE PLANS AS "MANHOLES 3X3-L", "CATCH BASINS 4-B", "INLETS 2X3-H", ETC. THE FIRST NUMBERS DESIGNATE THE SIZE OF THE STRUCTURE, AND THE FOLLOWING LETTER DESIGNATES THE TYPE OF COVER TO BE USED TO COMPRISE THE COMPLETE UNIT.

BASES SHALL BE PLACED ON A BED OF MATERIAL AT LEAST 6 INCHES IN DEPTH, WHICH MEETS THE REQUIREMENTS OF FOUNDATION BACKFILL. THIS BEDDING SHALL BE COMPACTED AND PROVIDE UNIFORM SUPPORT FOR THE ENTIRE AREA OF THE BASE.

PRECAST REINFORCED CONCRETE CONE TOPS (ECCENTRIC OR CONCENTRIC) OR PRECAST REINFORCED CONCRETE FLAT SLAB TOPS MAY BE USED ON CONCRETE BLOCK STRUCTURES.

ECCENTRIC CONE TOPS MAY BE USED ON ALL STRUCTURES, AND CONCENTRIC CONE TOPS SHALL BE USED ONLY ON STRUCTURES 5 FEET OR LESS IN DEPTH, UNLESS OTHERWISE DIRECTED BY THE ENGINEER.

STEPS MEETING AASHTO M199 AND THE FOLLOWING REQUIREMENTS SHALL BE INSTALLED IN ALL STRUCTURES OVER 5 FEET IN DEPTH: 16 INCH C-C MAXIMUM SPACING; PROJECT A MINIMUM CLEAR DISTANCE OF 4 INCHES FROM THE WALL AT THE POINT OF EMBEDMENT; MINIMUM LENGTH OF 10 INCHES; MINIMUM WALL EMBEDMENT OF 3 INCHES. FERROUS METAL STEPS NOT PAINTED OR TREATED TO RESIST CORROSION SHALL HAVE A MINIMUM CROSS SECTIONAL DIMENSION OF 1 INCH.

STEPS OF APPROVED POLYPROPYLENE PLASTIC COATED REINFORCEMENT BAR ARE ACCEPTABLE. REINFORCING BAR MUST BE A MINIMUM OF ½ INCH AND MEET THE REQUIREMENTS OF ASTM A615.

CERTIFICATION SHALL BE PROVIDED THAT INSTALLED STEPS WHEN TESTED IN ACCORDANCE WITH SECTION 10 OF AASHTO T280 CAN WITHSTAND A VERTICAL LOAD OF 800 LBS. AND A HORIZONTAL LOAD OF 400 LBS.

ALL BAR STEEL REINFORCEMENT SHALL BE EMBEDDED 2 INCHES CLEAR UNLESS OTHERWISE SHOWN OR NOTED.

ALL PRECAST INLET UNITS SHALL CONFORM TO THE PERTINENT REQUIREMENTS OF AASHTO DESIGNATION M199.

PRECAST REINFORCED RISERS SHALL HAVE A TONGUE AND GROOVE JOINT WITH TONGUE UP OR DOWN.

CONCRETE BLOCK WILL NOT BE PERMITED FOR STRUCTURES GREATER THAN 4 FEET IN DIAMETER.

4" OVERHANGING BASES ARE REQUIRED FOR ALL CONCRETE BLOCK INSTALLATIONS. 4" OVERHANG IS REQUIRED WHEN SEPARATE PRECAST BASE IS PROVIDED. OVERHANG IS NOT REQUIRED ON PRECAST STRUCTURES WITH AN INTEGRAL OR MONOLITHIC BASE.

FOR ADDITIONAL CONFIGURATIONS, MAINTAIN A MINIMUM OF 12 INCHES AS MEASURED FROM THE INSIDE OF THE STRUCTURE WALL BETWEEN THE OUTSIDE PIPE WALLS OF ADJACENT PIPES. SEE DETAIL "C".

① MINIMUM WALL THICKNESS SHALL BE 4 INCHES FOR 3-FT, 5 INCHES FOR 4-FT, 6 INCHES FOR 5-FT AND 7 INCHES FOR 6-FT DIAMETER PRECAST CATCH BASINS.

② FOR PRECAST CATCH BASINS PROVIDE REINFORCING STEEL IN ACCORDANCE TO AASHTO M199.

③ PRECAST FLAT SLAB TOPS AND BASES WITH A DIAMETER OF 48" AND LESS SHALL HAVE A MINIMUM THICKNESS OF 6". PRECAST FLAT SLAB TOPS AND BASES WITH A DIAMETER LARGER THAN 48" SHALL HAVE A MINIMUM THICKNESS OF 8".

④ 1' CONCRETE KEY POURED AFTER INSTALLATION. 2' SUMP MEASURED FROM TOP OF KEY.

CATCH BASIN COVER OPENING MATRIX

CATCH BASIN SIZE	INLET COVER TYPE	ALL A'S	ALL B'S	BW	C	F	ALL H'S	S	T	V	WM	Z
	OPENING SIZE (FT)											
3-FT	2X2	X	X					X		X		
	2 DIA.				X							X
4-FT-6-FT	2X2	X	X					X		X		
	2X2.5			X				X	X	X	X	
	2 DIA.				X							X
	2X3						X					
	2.5X3					X						

PIPE MATRIX

CATCH BASIN SIZE	MAXIMUM INSIDE PIPE DIAMETER FOR TWO PIPES	
	180° SEPARATION (IN)	90° SEPARATION (IN)
3-FT	15	12
4-FT	24	18
5-FT	36	24
6-FT	42	30

CATCH BASINS 3-FT, 4-FT, 5-FT AND 6-FT DIAMETER

CATCH BASINS 3-FT, 4-FT, 5-FT AND 6-FT DIAMETER

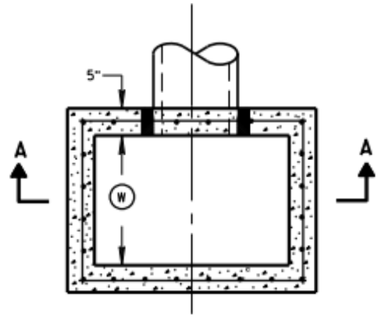

PLAN VIEW

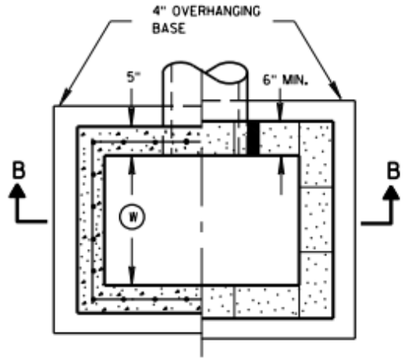

PLAN VIEW

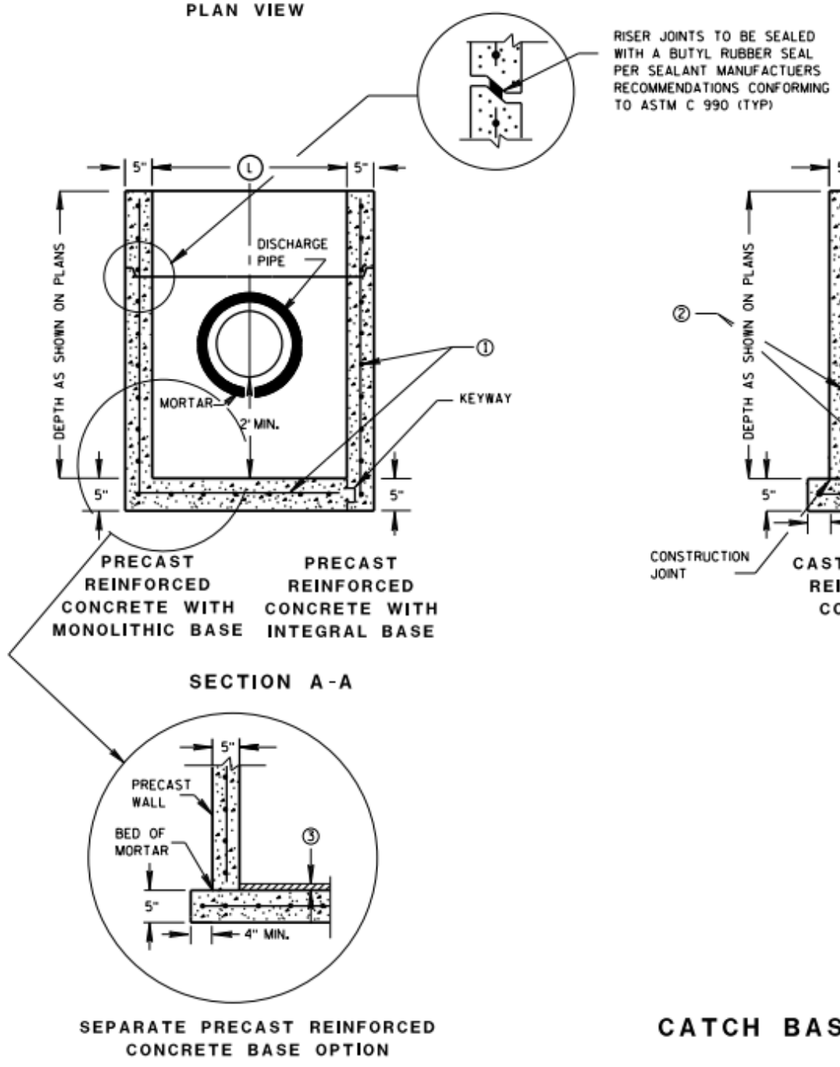

SECTION A-A

SEPARATE PRECAST REINFORCED CONCRETE BASE OPTION

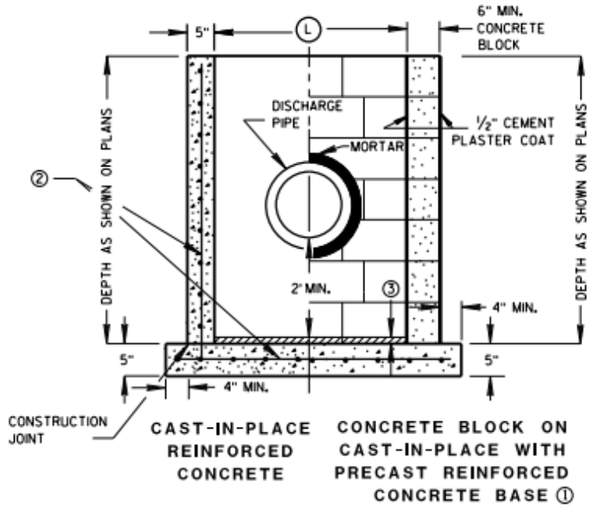

SECTION B-B

GENERAL NOTES

DETAILS OF CONSTRUCTION, MATERIALS AND WORKMANSHIP NOT SHOWN ON THIS DRAWING SHALL CONFORM TO THE PERTINENT REQUIREMENTS OF THE STANDARD SPECIFICATIONS AND THE APPLICABLE SPECIAL PROVISIONS.

UNLESS OTHERWISE AUTHORIZED IN WRITING BY THE ENGINEER, THE CONTRACTOR SHALL NOT ORDER AND DELIVER PRECAST CATCH BASIN UNITS REQUIRED FOR THE PROJECT UNTIL A LIST OF SIZES IS FURNISHED BY THE ENGINEER.

DETAILED DRAWINGS FOR PROPOSED ALTERNATE DESIGNS FOR UNDERGROUND DRAINAGE STRUCTURES SHALL BE SUBMITTED TO THE ENGINEER FOR APPROVAL PROVIDING THAT SUCH ALTERNATE DESIGNS MAKE PROVISION FOR EQUIVALENT CAPACITY AND STRENGTH.

ALL PRECAST CATCH BASIN UNITS SHALL CONFORM TO THE PERTINENT REQUIREMENTS OF ASTM C 913.

ALL DRAINAGE STRUCTURES ARE DESIGNATED ON THE PLANS AS "MANHOLES 3X3-L", "CATCH BASINS 4-B", "INLETS 2X3-H", ETC. THE FIRST NUMBERS DESIGNATES THE SIZE OF THE STRUCTURE, AND THE FOLLOWING LETTER DESIGNATES THE TYPE OF COVER TO BE USED TO COMPRISE THE COMPLETE UNIT.

BASES SHALL BE PLACED ON A BED OF MATERIAL AT LEAST 6 INCHES IN DEPTH, WHICH MEETS THE REQUIREMENTS OF FOUNDATION BACKFILL. THIS BEDDING SHALL BE COMPACTED AND PROVIDE UNIFORM SUPPORT FOR THE ENTIRE AREA OF THE BASE.

ALL BAR STEEL REINFORCEMENT SHALL BE EMBEDDED 2 INCHES CLEAR UNLESS OTHERWISE SHOWN OR NOTED.

PRECAST REINFORCED RISERS SHALL HAVE A TONGUE AND GROOVE JOINT WITH TONGUE UP OR DOWN.

4" OVERHANGING BASES ARE REQUIRED FOR CAST-IN-PLACE REINFORCED CONCRETE AND CONCRETE BLOCK INSTALLATIONS.
4" OVERHANG IS REQUIRED WHEN SEPARATE PRECAST BASE IS PROVIDED.
OVERHANG IS NOT REQUIRED ON PRECAST STRUCTURES WITH AN INTEGRAL OR MONOLITHIC BASE.

MAXIMUM INSIDE PIPE DIAMETER DETERMINED BY 3" CLEARANCE ON EACH SIDE OF THE OUTSIDE WALL OF THE PIPE. SEE DETAIL "A". ASSUMES PIPE ENTERS PERPENDICULAR TO THE STRUCTURE.

① FOR PRECAST CATCH BASINS PROVIDE REINFORCING STEEL IN ACCORDANCE TO ASTM C 913.

② CONTRACTOR TO PROVIDE DRAWING(S) STAMPED BY A PROFESSIONAL ENGINEER FOR STEEL REINFORCING DESIGN FOR CAST-IN-PLACE STRUCTURES.

③ 1" CONCRETE KEY POURED AFTER INSTALLATION. 2" SUMP MEASURED FROM TOP OF KEY.

CATCH BASIN COVER MATRIX

CATCH BASIN SIZE		INLET COVER TYPE	F	ALL H'S
	WIDTH (W) (FT)	LENGTH (L) (FT)		
2X3-FT	2	3		X
2.5X3-FT	2.5	3	X	

PIPE MATRIX

CATCH BASIN SIZE	MAXIMUM INSIDE PIPE DIAMETER FOR TWO PIPES	
	WIDTH (IN)	LENGTH (IN)
2X3-FT	12	24
2.5X3-FT	18	24

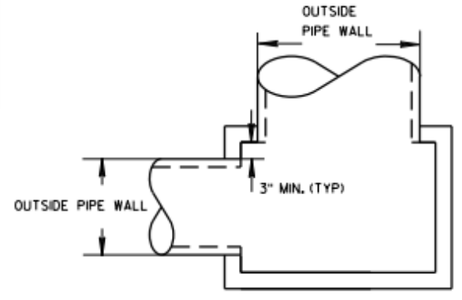

DETAIL "A"

CATCH BASINS 2X3-FT AND 2.5X3-FT

CATCH BASINS 2X3-FT AND 2.5X3-FT

PROJECT NO: RD16-003	HWY: CTH S	COUNTY: KENOSHA	CONSTRUCTION DETAILS	SHEET: 26	E

FILE NAME : _____ PLOT DATE : _____ PLOT BY : _____ PLOT NAME : _____ PLOT SCALE : 1:1

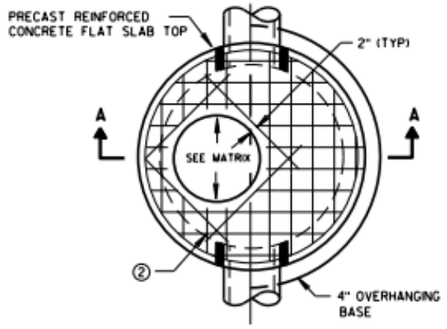

PLAN VIEW CIRCULAR OPENING

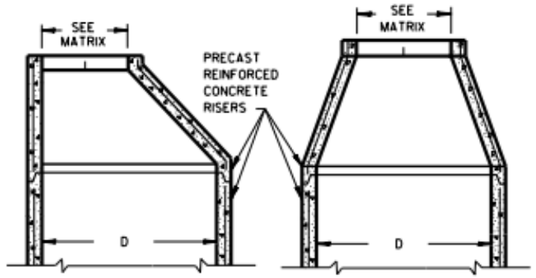

OPTIONAL PRECAST REINFORCED CONCRETE ECCENTRIC TOP

OPTIONAL PRECAST REINFORCED CONCRETE CONCENTRIC TOP

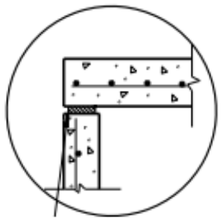

TOP WITH PLAIN END JOINT

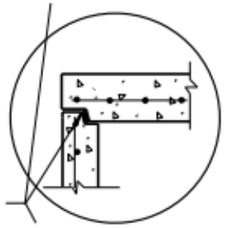

TOP WITH TONGUE AND GROOVE JOINT

JOINTS TO BE SEALED WITH A BUTYL RUBBER SEAL PER SEALANT MANUFACTURERS RECOMMENDATIONS CONFORMING TO ASTM C990 (TYP)

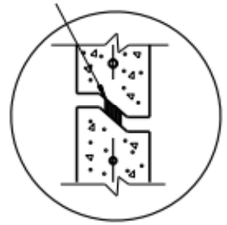

RISER WITH TONGUE AND GROOVE JOINT

DETAIL "B"

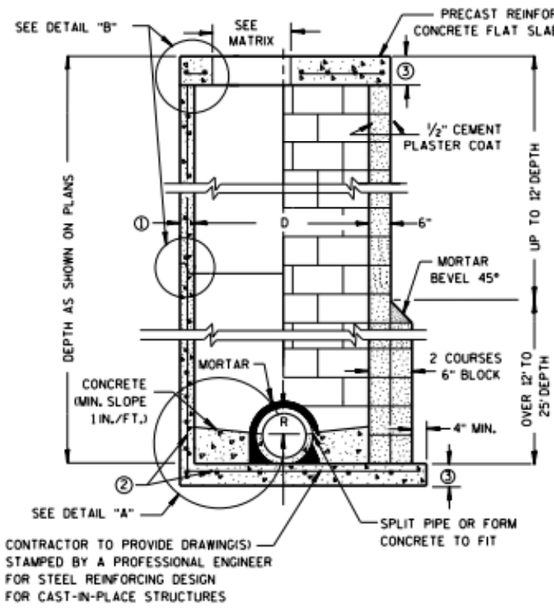

PRECAST REINFORCED CONCRETE WITH MONOLITHIC BASE

CONCRETE BLOCK WITH CAST-IN-PLACE OR PRECAST REINFORCED CONCRETE BASE ②

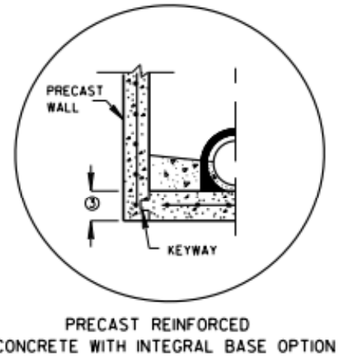

PRECAST REINFORCED CONCRETE WITH INTEGRAL BASE OPTION

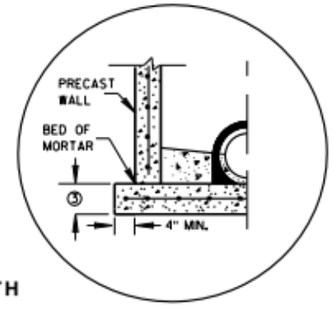

SEPARATE PRECAST REINFORCED CONCRETE BASE OPTION

DETAIL "A"

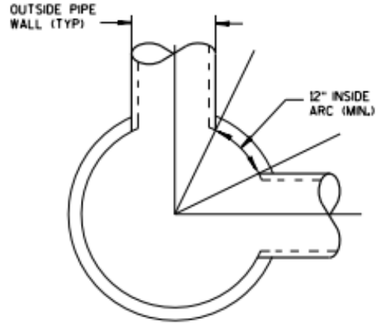

DETAIL "C"

GENERAL NOTES

DETAILS OF CONSTRUCTION, MATERIALS AND WORKMANSHIP NOT SHOWN ON THIS DRAWING SHALL CONFORM TO THE PERTINENT REQUIREMENTS OF THE STANDARD SPECIFICATIONS AND THE APPLICABLE SPECIAL PROVISIONS.

UNLESS OTHERWISE AUTHORIZED IN WRITING BY THE ENGINEER, THE CONTRACTOR SHALL NOT ORDER AND DELIVER PRECAST MANHOLE UNITS REQUIRED FOR THE PROJECT UNTIL A LIST OF SIZES IS FURNISHED BY THE ENGINEER.

DETAILED DRAWINGS FOR PROPOSED ALTERNATE DESIGNS FOR UNDERGROUND DRAINAGE STRUCTURES SHALL BE SUBMITTED TO THE ENGINEER FOR APPROVAL PROVIDING THAT SUCH ALTERNATE DESIGNS MAKE PROVISION FOR EQUIVALENT CAPACITY AND STRENGTH.

ALL DRAINAGE STRUCTURES ARE DESIGNATED ON THE PLANS AS "MANHOLES 3X3-L", "CATCH BASINS 4-B", "INLETS 2X3-H", ETC. THE FIRST NUMBERS DESIGNATE THE SIZE OF THE STRUCTURE, AND THE FOLLOWING LETTER DESIGNATES THE TYPE OF COVER TO BE USED TO COMPRISE THE COMPLETE UNIT.

BASES SHALL BE PLACED ON A BED OF MATERIAL AT LEAST 6 INCHES IN DEPTH, WHICH MEETS THE REQUIREMENTS OF FOUNDATION BACKFILL. THIS BEDDING SHALL BE COMPACTED AND PROVIDE UNIFORM SUPPORT FOR THE ENTIRE AREA OF THE BASE.

PRECAST REINFORCED CONE TOPS (ECCENTRIC OR CONCENTRIC) OR PRECAST REINFORCED FLAT SLAB TOPS MAY BE USED ON CONCRETE BLOCK STRUCTURES.

ECCENTRIC CONE TOPS MAY BE USED ON ALL STRUCTURES, AND CONCENTRIC CONE TOPS SHALL BE USED ONLY ON STRUCTURES 5 FEET OR LESS IN DEPTH, UNLESS OTHERWISE DIRECTED BY THE ENGINEER.

STEPS MEETING AASHTO M199 AND THE FOLLOWING REQUIREMENTS SHALL BE INSTALLED IN ALL STRUCTURES OVER 5 FEET IN DEPTH: 16 INCH C-C MAXIMUM SPACING; PROJECT A MINIMUM CLEAR DISTANCE OF 4 INCHES FROM THE WALL AT THE POINT OF EMBEDMENT; MINIMUM LENGTH OF 10 INCHES; MINIMUM WALL EMBEDMENT OF 3 INCHES. FERROUS METAL STEPS NOT PAINTED OR TREATED TO RESIST CORROSION SHALL HAVE A MINIMUM CROSS SECTIONAL DIMENSION OF 1 INCH.

STEPS OF APPROVED POLYPROPYLENE PLASTIC COATED REINFORCEMENT BAR ARE ACCEPTABLE. REINFORCING BAR MUST BE A MINIMUM OF ½" AND MEET THE REQUIREMENTS OF ASTM A615.

CERTIFICATION SHALL BE PROVIDED THAT INSTALLED STEPS WHEN TESTED IN ACCORDANCE WITH SECTION 10 OF AASHTO T280 CAN WITHSTAND A VERTICAL LOAD OF 800 LBS. AND A HORIZONTAL LOAD OF 400 LBS.

ALL BAR STEEL REINFORCEMENT SHALL BE EMBEDDED 2 INCHES CLEAR UNLESS OTHERWISE SHOWN OR NOTED.

CONCRETE BLOCK WILL NOT BE PERMITED FOR STRUCTURES GREATER THAN 4 FEET IN DIAMETER.

PRECAST REINFORCED RISERS SHALL HAVE A TONGUE AND GROOVE JOINT WITH TONGUE UP OR DOWN.

ALL PRECAST MANHOLE UNITS SHALL CONFORM TO THE PERTINENT REQUIREMENTS OF AASHTO DESIGNATION M 199.

4" OVERHANGING BASES ARE REQUIRED FOR ALL CONCRETE BLOCK INSTALLATIONS. 4" OVERHANG IS REQUIRED WHEN SEPARATE PRECAST BASE IS PROVIDED. OVERHANG IS NOT REQUIRED ON PRECAST STRUCTURES WITH AN INTEGRAL OR MONOLITHIC BASE.

FOR ADDITIONAL CONFIGURATIONS, MAINTAIN A MINIMUM OF 12 INCHES AS MEASURED FROM THE INSIDE OF THE STRUCTURE WALL BETWEEN THE OUTSIDE PIPE WALLS OF ADJACENT PIPES. SEE DETAIL "C".

① MINIMUM WALL THICKNESS SHALL BE 4 INCHES FOR 3-FT, 5 INCHES FOR 4-FT, 6 INCHES FOR 5-FT, 7 INCHES FOR 6-FT, 8 INCHES FOR 7-FT AND 9 INCHES FOR 8-FT DIAMETER PRECAST MANHOLES.

② FOR PRECAST MANHOLES PROVIDE REINFORCING STEEL IN ACCORDANCE TO AASHTO M199.

③ PRECAST FLAT SLAB TOPS AND BASES WITH A DIAMETER OF 48" AND LESS SHALL HAVE A MINIMUM THICKNESS OF 6". PRECAST FLAT SLAB TOPS AND BASES WITH A DIAMETER LARGER THAN 48" SHALL HAVE A MINIMUM THICKNESS OF 8".

MANHOLE COVER OPENING MATRIX

MANHOLE COVER TYPE	C	ALL J'S	K	L	M
OPENING SIZE (FT)					
2 DIA.	X	X		X	
3 DIA.			X		X

PIPE MATRIX

MANHOLE SIZE	MAXIMUM INSIDE PIPE DIAMETER FOR TWO PIPES	
	180° SEPARATION (IN)	90° SEPARATION (IN)
3-FT	15	12
4-FT	24	18
5-FT	36	24
6-FT	42	36
7-FT	48	36
8-FT	60	42

MANHOLES 3-FT, 4-FT, 5-FT, 6-FT, 7-FT AND 8-FT DIAMETER

MANHOLES 3-FT, 4-FT, 5-FT, 6-FT, 7-FT AND 8-FT DIAMETER

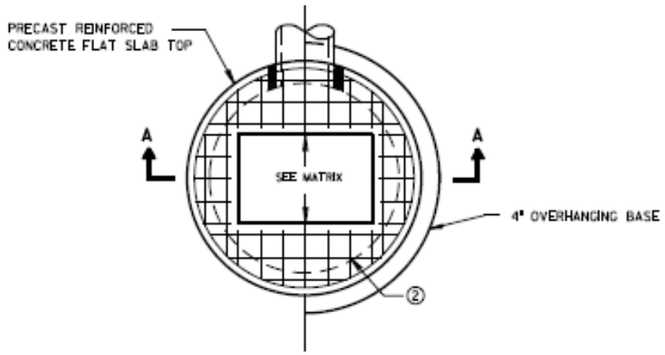

PLAN VIEW RECTANGULAR OPENING

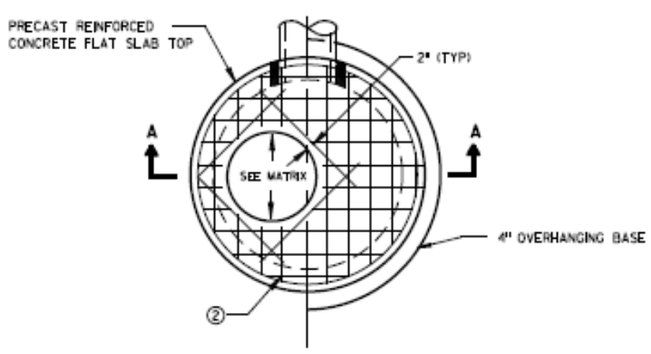

PLAN VIEW CIRCULAR OPENING

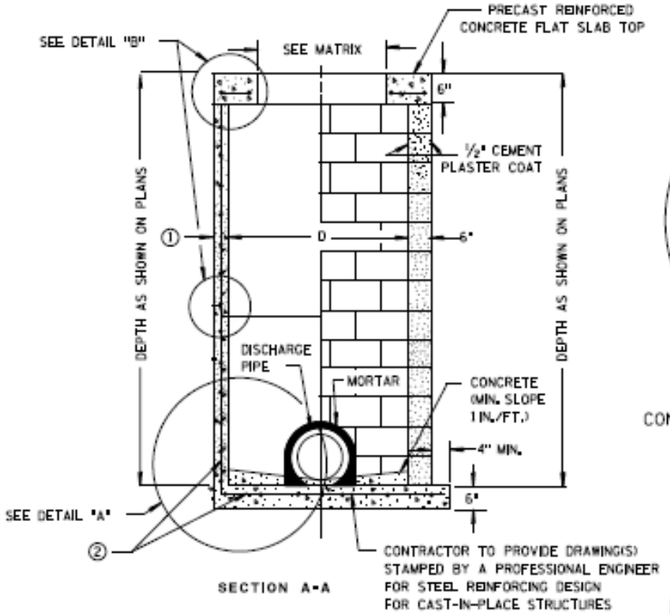

PRECAST REINFORCED CONCRETE WITH MONOLITHIC BASE

CONCRETE BLOCK WITH CAST-IN-PLACE OR PRECAST REINFORCED CONCRETE BASE ②

CIRCULAR INLETS W/ FLAT TOP

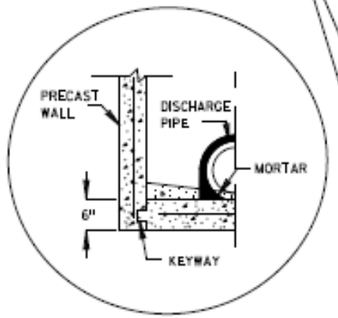

PRECAST REINFORCED
CONCRETE WITH INTEGRAL BASE OPTION

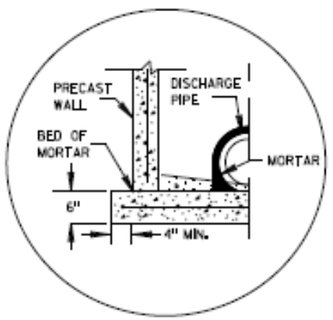

SEPARATE PRECAST REINFORCED
CONCRETE BASE OPTION

DETAIL "A"

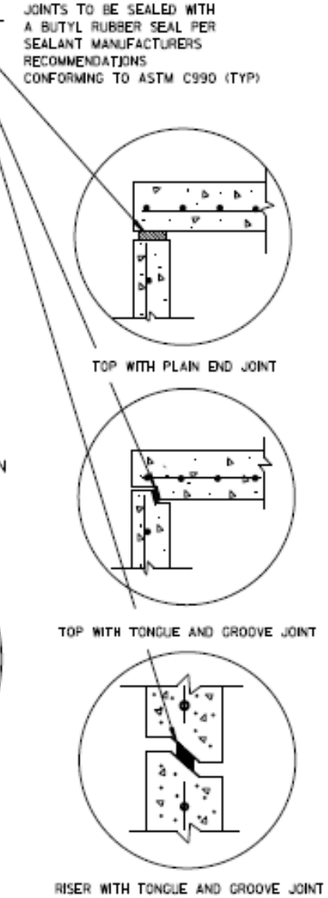

DETAIL "B"

GENERAL NOTES

DETAILS OF CONSTRUCTION, MATERIALS AND WORKMANSHIP NOT SHOWN ON THIS DRAWING SHALL CONFORM TO THE PERTINENT REQUIREMENTS OF THE STANDARD SPECIFICATIONS AND THE APPLICABLE SPECIAL PROVISIONS.

UNLESS OTHERWISE AUTHORIZED IN WRITING BY THE ENGINEER, THE CONTRACTOR SHALL NOT ORDER AND DELIVER PRECAST INLET UNITS REQUIRED FOR THE PROJECT UNTIL A LIST OF SIZES IS FURNISHED BY THE ENGINEER.

DETAILED DRAWINGS FOR PROPOSED ALTERNATE DESIGNS FOR UNDERGROUND DRAINAGE STRUCTURES SHALL BE SUBMITTED TO THE ENGINEER FOR APPROVAL PROVIDING THAT SUCH ALTERNATE DESIGNS MAKE PROVISION FOR EQUIVALENT CAPACITY AND STRENGTH.

ALL DRAINAGE STRUCTURES ARE DESIGNATED ON THE PLANS AS "MANHOLES 3X3-L", "CATCH BASINS 4-B", "INLETS 2X3-H", ETC. THE FIRST NUMBERS DESIGNATE THE SIZE OF THE STRUCTURE, AND THE FOLLOWING LETTER DESIGNATES THE TYPE OF COVER TO BE USED TO COMPRISE THE COMPLETE UNIT.

BASES SHALL BE PLACED ON A BED OF MATERIAL AT LEAST 6 INCHES IN DEPTH, WHICH MEETS THE REQUIREMENTS OF FOUNDATION BACKFILL. THIS BEDDING SHALL BE COMPACTED AND PROVIDE UNIFORM SUPPORT FOR THE ENTIRE AREA OF THE BASE.

ALL BAR STEEL REINFORCEMENT SHALL BE EMBEDDED 2 INCHES CLEAR UNLESS OTHERWISE SHOWN OR NOTED.

ALL PRECAST INLET UNITS SHALL CONFORM TO THE PERTINENT REQUIREMENTS OF AASHTO DESIGNATION M199.

PRECAST REINFORCED RISERS SHALL HAVE A TONGUE AND GROOVE JOINT WITH TONGUE UP OR DOWN.

4" OVERHANGING BASES ARE REQUIRED FOR ALL CONCRETE BLOCK INSTALLATIONS. 4" OVERHANG IS REQUIRED WHEN SEPARATE PRECAST BASE IS PROVIDED. OVERHANG IS NOT REQUIRED ON PRECAST STRUCTURES WITH AN INTEGRAL OR MONOLITHIC BASE.

FOR ADDITIONAL CONFIGURATIONS, MAINTAIN A MINIMUM OF 12 INCHES AS MEASURED FROM THE INSIDE OF THE STRUCTURE WALL BETWEEN THE OUTSIDE PIPE WALLS OF ADJACENT PIPES. SEE DETAIL "C".

① MINIMUM WALL THICKNESS SHALL BE 4-IN FOR 3-FT DIAMETER AND 5-IN FOR 4-FT DIAMETER PRECAST INLETS.

② FOR PRECAST CATCH BASINS PROVIDE REINFORCING STEEL IN ACCORDANCE TO AASHTO M199.

INLET COVER OPENING MATRIX

	INLET COVER TYPE	ALL A'S	ALL B'S	BW	C	F	ALL H'S	S	T	V	WM	Z
INLET SIZE	OPENING SIZE (FT)											
3-FT	2 DIA.				X							X
	2X2	X	X					X		X		
4-FT	2 DIA.				X							X
	2X2	X	X					X		X		
	2X2.5			X				X	X	X	X	
	2X3						X					
	2.5X3					X						

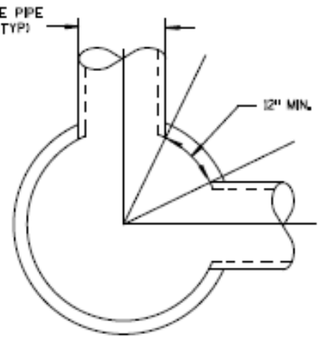

DETAIL "C"

PIPE MATRIX

INLET SIZE	MAXIMUM INSIDE PIPE DIAMETER FOR TWO PIPES	
	180° SEPARATION (IN)	90° SEPARATION (IN)
3-FT	15	12
4-FT	24	18

INLETS 3-FT AND 4-FT DIAMETER

INLETS 3-FT AND 4-FT DIAMETER

PROJECT NO: RD16-003	HWY: CTH S	COUNTY: KENOSHA	CONSTRUCTION DETAILS	SHEET: 28	E

FILE NAME : _____ PLOT DATE : _____ PLOT BY : _____ PLOT NAME : _____ PLOT SCALE : 1:1

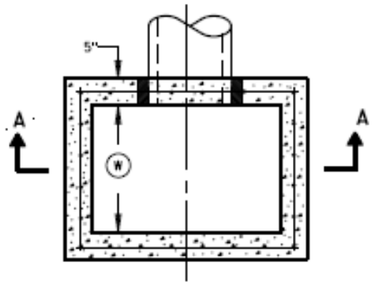

PLAN VIEW

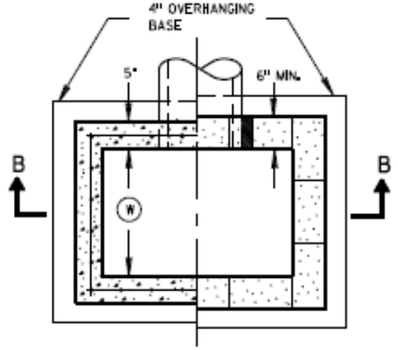

PLAN VIEW

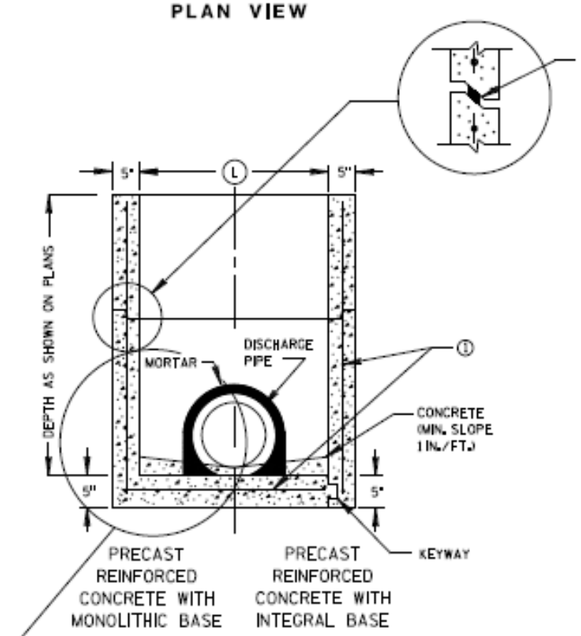

SECTION A-A

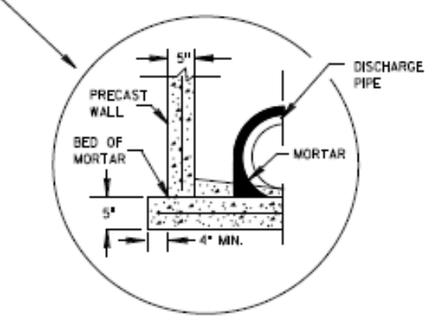

SEPARATE PRECAST REINFORCED CONCRETE BASE OPTION

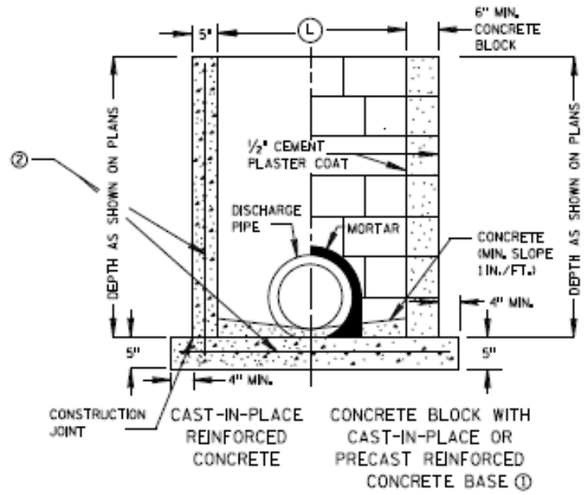

SECTION B-B

GENERAL NOTES

DETAILS OF CONSTRUCTION, MATERIALS AND WORKMANSHIP NOT SHOWN ON THIS DRAWING SHALL CONFORM TO THE PERTINENT REQUIREMENTS OF THE STANDARD SPECIFICATIONS AND THE APPLICABLE SPECIAL PROVISIONS.

UNLESS OTHERWISE AUTHORIZED IN WRITING BY THE ENGINEER, THE CONTRACTOR SHALL NOT ORDER AND DELIVER PRECAST INLET UNITS REQUIRED FOR THE PROJECT UNTIL A LIST OF SIZES IS FURNISHED BY THE ENGINEER.

DETAILED DRAWINGS FOR PROPOSED ALTERNATE DESIGNS FOR UNDERGROUND DRAINAGE STRUCTURES SHALL BE SUBMITTED TO THE ENGINEER FOR APPROVAL PROVIDING THAT SUCH ALTERNATE DESIGNS MAKE PROVISION FOR EQUIVALENT CAPACITY AND STRENGTH.

ALL PRECAST INLET UNITS SHALL CONFORM TO THE PERTINENT REQUIREMENTS OF ASTM C 913.

ALL DRAINAGE STRUCTURES ARE DESIGNATED ON THE PLANS AS "MANHOLES 3X3-L", "CATCH BASINS 4-B", "INLETS 2X3-H", ETC. THE FIRST NUMBERS DESIGNATES THE SIZE OF THE STRUCTURE, AND THE FOLLOWING LETTER DESIGNATES THE TYPE OF COVER TO BE USED TO COMPRISE THE COMPLETE UNIT.

BASES SHALL BE PLACED ON A BED OF MATERIAL AT LEAST 6 INCHES IN DEPTH, WHICH MEETS THE REQUIREMENTS OF FOUNDATION BACKFILL. THIS BEDDING SHALL BE COMPACTED AND PROVIDE UNIFORM SUPPORT FOR THE ENTIRE AREA OF THE BASE.

ALL BAR STEEL REINFORCEMENT SHALL BE EMBEDDED 2 INCHES CLEAR UNLESS OTHERWISE SHOWN OR NOTED.

PRECAST REINFORCED RISERS SHALL HAVE A TONGUE AND GROOVE JOINT WITH TONGUE UP OR DOWN.

4" OVERHANGING BASES ARE REQUIRED FOR CAST-IN-PLACE REINFORCED CONCRETE AND CONCRETE BLOCK INSTALLATIONS. 4" OVERHANG IS REQUIRED WHEN SEPARATE PRECAST BASE IS PROVIDED. OVERHANG IS NOT REQUIRED ON PRECAST STRUCTURES WITH AN INTEGRAL OR MONOLITHIC BASE.

MAXIMUM INSIDE PIPE DIAMETER DETERMINED BY 3 INCH CLEARANCE ON EACH SIDE OF THE OUTSIDE WALL OF THE PIPE. SEE DETAIL "A". ASSUMES PIPE ENTERS PERPENDICULAR TO THE STRUCTURE.

① FOR PRECAST INLETS PROVIDE REINFORCING STEEL IN ACCORDANCE TO ASTM C 913.

② CONTRACTOR TO PROVIDE DRAWING(S) STAMPED BY A PROFESSIONAL ENGINEER FOR STEEL REINFORCING DESIGN FOR CAST-IN-PLACE STRUCTURES.

INLET COVER MATRIX

INLET SIZE		INLET COVER TYPE	ALL A'S	ALL B'S	BW	F	ALL H'S	S	T	V	WM
	WIDTH (R) (FT)	LENGTH (L) (FT)									
2X2-FT	2	2	X	X				X		X	
2X2.5-FT	2	2.5			X			X	X	X	X
2X3-FT	2	3					X				
2.5X3-FT	2.5	3				X					

PIPE MATRIX

INLET SIZE	MAXIMUM INSIDE PIPE DIAMETER	
	WIDTH (IN)	LENGTH (IN)
2X2-FT	12	12
2X2.5-FT	12	18
2X3-FT	12	24
2.5X3-FT	18	24

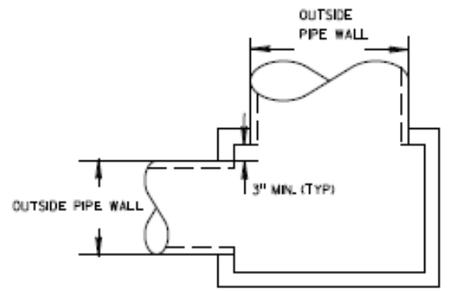

DETAIL "A"

INLETS 2X2-FT, 2X2.5-FT, 2X3-FT AND 2.5X3-FT

INLETS 2X2-FT, 2X2.5-FT, 2X3-FT AND 2.5X3-FT

PROJECT NO: RD16-003	HWY: CTH S	COUNTY: KENOSHA	CONSTRUCTION DETAILS	SHEET: 29	E

FILE NAME : _____ PLOT DATE : _____ PLOT BY : _____ PLOT NAME : _____ PLOT SCALE : 1:1

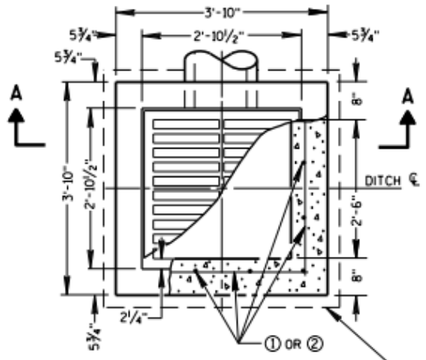

PLAN VIEW

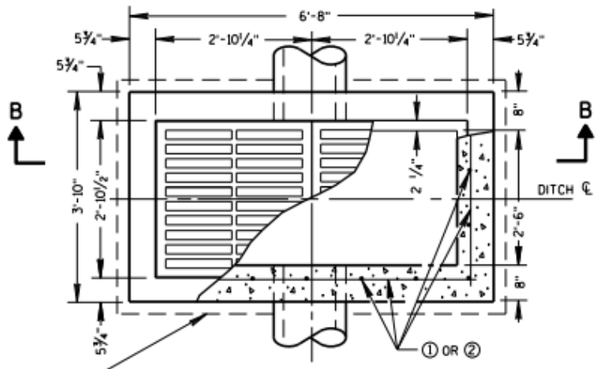

PLAN VIEW

4" OVERHANGING BASE ON REINFORCED CAST-IN-PLACE CONCRETE INLETS

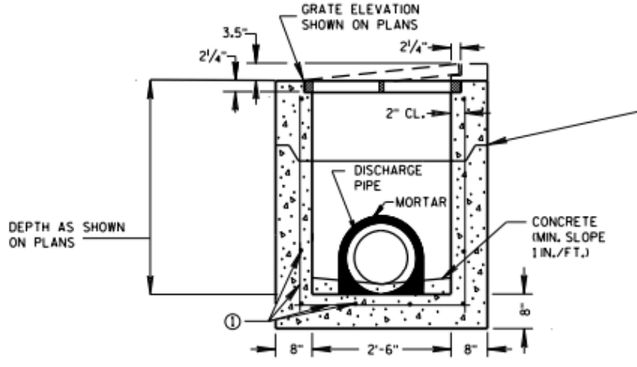

PRECAST REINFORCED CONCRETE SECTION A-A

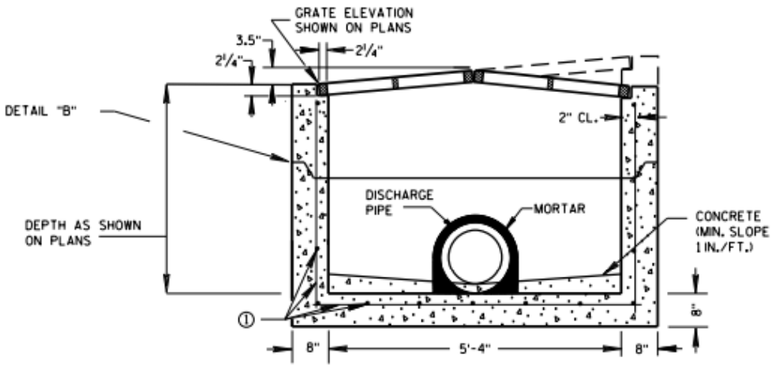

PRECAST REINFORCED CONCRETE SECTION B-B

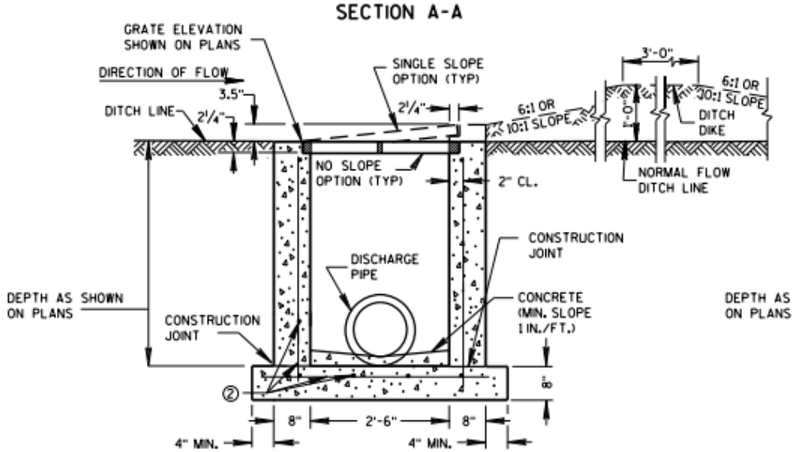

REINFORCED CAST-IN-PLACE CONCRETE SECTION A-A

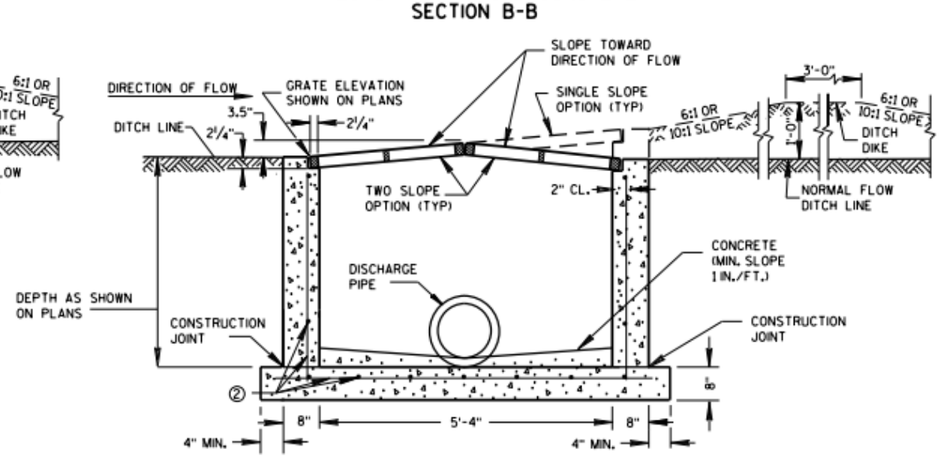

REINFORCED CAST-IN-PLACE CONCRETE SECTION B-B

INLETS MEDIAN 1 GRATE

INLETS MEDIAN 2 GRATE

GENERAL NOTES

DETAILS OF CONSTRUCTION, MATERIALS AND WORKMANSHIP NOT SHOWN ON THIS DRAWING SHALL CONFORM TO THE PERTINENT REQUIREMENTS OF THE STANDARD SPECIFICATIONS AND THE APPLICABLE SPECIAL PROVISIONS.

UNLESS OTHERWISE AUTHORIZED IN WRITING BY THE ENGINEER, THE CONTRACTOR SHALL NOT ORDER AND DELIVER PRECAST INLET UNITS REQUIRED FOR THE PROJECT UNTIL A LIST OF SIZES IS FURNISHED BY THE ENGINEER.

DETAILED DRAWINGS FOR PROPOSED ALTERNATE DESIGNS FOR INLETS WHICH MAY INCLUDE PRECAST REINFORCED CONCRETE INLETS, SHALL BE SUBMITTED TO THE ENGINEER FOR APPROVAL PROVIDING THAT SUCH ALTERNATE DESIGNS MAKE PROVISION FOR EQUIVALENT CAPACITY AND STRENGTH.

ALL MEDIAN INLETS ARE DESIGNATED ON THE PLANS AS "INLETS, 1G-MS", ETC. THE FIRST NUMBER AND LETTER DESIGNATE THE TYPE OF STRUCTURE, AND THE FOLLOWING LETTERS DESIGNATE THE TYPE OF COVER TO BE USED TO COMPRISE THE COMPLETE UNIT.

BASES SHALL BE PLACED ON A BED OF MATERIAL AT LEAST 6 INCHES IN DEPTH, WHICH MEETS THE REQUIREMENTS OF FOUNDATION BACKFILL. THIS BEDDING SHALL BE COMPACTED AND PROVIDE UNIFORM SUPPORT FOR THE ENTIRE AREA OF THE BASE.

ALL BAR STEEL REINFORCEMENT SHALL BE EMBEDDED 2 INCHES CLEAR UNLESS OTHERWISE SHOWN OR NOTED.

PRECAST REINFORCED RISERS SHALL HAVE A TONGUE AND GROOVE JOINT WITH TONGUE UP OR DOWN.

ALL PRECAST INLET UNITS SHALL CONFORM TO THE PERTINENT REQUIREMENTS OF ASTM C 913.

MAXIMUM INSIDE PIPE DIAMETER DETERMINED BY 3" CLEARANCE ON EACH SIDE OF THE OUTSIDE WALL OF THE PIPE. SEE DETAIL "A". ASSUMES PIPE ENTERS PERPENDICULAR TO THE STRUCTURE.

① FOR PRECAST INLETS PROVIDE REINFORCING STEEL IN ACCORDANCE TO ASTM C 913.

② CONTRACTOR TO PROVIDE DRAWING(S) STAMPED BY A PROFESSIONAL ENGINEER FOR STEEL REINFORCING DESIGN FOR CAST-IN-PLACE STRUCTURES.

PIPE MATRIX

	MAXIMUM INSIDE PIPE DIAMETER	
INLET SIZE	WIDTH (IN)	LENGTH (IN)
1 GRATE	18	18
2 GRATE	18	42

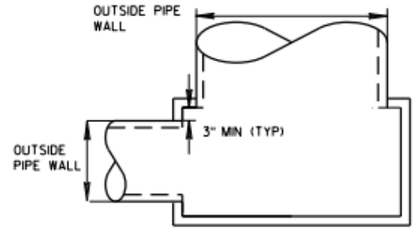

DETAIL "A"

JOINTS TO BE SEALED WITH A BUTYL RUBBER SEAL PER SEALANT MANUFACTURERS RECOMMENDATIONS CONFORMING TO ASTM C 990 (TYP)

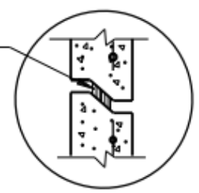

DETAIL "B"

INLETS MEDIAN 1 AND 2 GRATE

PROJECT NO: RD16-003	HWY: CTH S	COUNTY: KENOSHA	CONSTRUCTION DETAILS	SHEET: 30	E

FILE NAME : _____ PLOT DATE : _____ PLOT BY : _____ PLOT NAME : _____ PLOT SCALE : 1:1

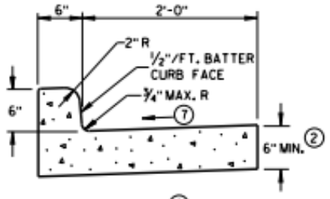

TYPES A① & D

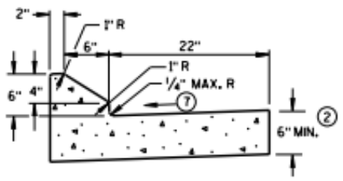

6" SLOPED CURB TYPES G① & J

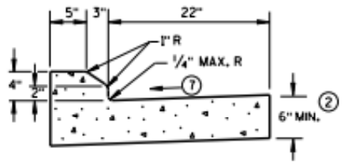

4" SLOPED CURB TYPES G① & J

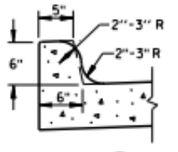

TYPES K① & L
(OPTIONAL CURB SHAPE)

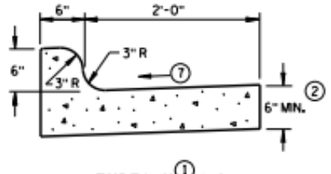

TYPES K① & L

CONCRETE CURB & GUTTER 30"

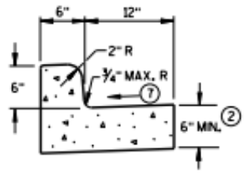

TYPES A① & D

CONCRETE CURB & GUTTER 18"

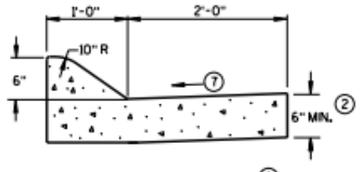

6" SLOPED CURB TYPES A① & D

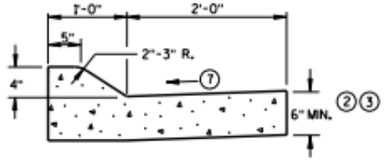

4" SLOPED CURB TYPES A① & D

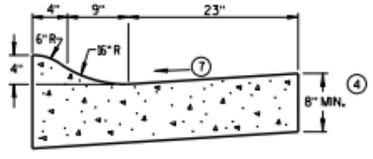

4" SLOPED CURB TYPES R① & T⑤

CONCRETE CURB & GUTTER 36"

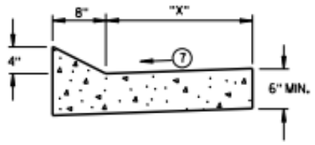

TYPES TBT & TBTT①

CONCRETE CURB & GUTTER

TBT & TBTT	"X"
30"	22"
36"	28"

GENERAL NOTES

DETAILS OF CONSTRUCTION, MATERIALS AND WORKMANSHIP NOT SHOWN ON THIS DRAWING SHALL CONFORM TO THE PERTINENT REQUIREMENTS OF THE CONTRACT.

PAVEMENT TIES AND TIE BARS SHALL BE EPOXY COATED IN CONFORMANCE WITH SUBSECTION 505.2.6.2 OF THE STANDARD SPECIFICATIONS.

INTEGRAL CURB & GUTTER SHALL CONFORM TO THE DETAILS SHOWN FOR CONCRETE CURB & GUTTER INCLUDING THE TRANSVERSE GUTTER SLOPE.

WHERE THE TRANSVERSE JOINTS IN THE PAVEMENT ARE REQUIRED TO BE SEALED, THE JOINTS IN THE INTEGRAL CURB AND GUTTER SHALL BE SEALED TO THE FACE OF CURB WITH THE SAME TYPE OF SEALANT. THE COST OF FURNISHING AND INSTALLING THIS SEALANT SHALL BE INCIDENTAL TO THE ITEM CONCRETE CURB AND GUTTER.

UNLESS OTHERWISE SHOWN ON THE TYPICAL CROSS SECTIONS, THE BASE AGGREGATE AND COMMON EXCAVATION LIMITS ARE 2'-0" BEHIND THE BACK OF CURBS.

① TIE BARS ARE REQUIRED FOR CURB AND GUTTER TYPES A, G, K, R AND TBTT.

② THE BOTTOM OF CURB AND GUTTER MAY BE CONSTRUCTED EITHER LEVEL OR PARALLEL TO THE SLOPE OF THE SUBGRADE OR BASE AGGREGATE PROVIDED A 6" MINIMUM GUTTER THICKNESS IS MAINTAINED.

③ USE 8" MINIMUM GUTTER THICKNESS WHEN USED WITH AN ADJACENT CONCRETE TRUCK APRON PLACED BEHIND BACK OF CURB.

④ THE BOTTOM OF CURB AND GUTTER MAY BE CONSTRUCTED EITHER LEVEL OR PARALLEL TO THE SLOPE OF THE SUBGRADE OR BASE AGGREGATE PROVIDED A 8" MINIMUM GUTTER THICKNESS IS MAINTAINED.

⑤ THE FACE OF CURB IS 6" FROM THE BACK OF CURB.

⑥ WHEN REVERSE SLOPE GUTTER IS REQUIRED, THE LOCATION(S) WILL BE SHOWN ELSEWHERE IN THE PLAN.

⑦ USE 4% GUTTER CROSS SLOPE UNLESS OTHERWISE NOTED IN THE PLANS.

⑧ INCLUDE LONGITUDINAL JOINT AND TIE BARS ALONG LANE EDGE WHEN CONCRETE PANEL WIDTH EXCEEDS THE MAXIMUM WIDTH PER TABLE BELOW. LONGITUDINAL JOINT(S) ARE NOT ALLOWED WITHIN TRAFFIC LANES AND BIKE LANES. LONGITUDINAL JOINT MAY BE SAWED.

PAVEMENT THICKNESS AND MAXIMUM CONCRETE PANEL WIDTH TABLE

PAVEMENT THICKNESS	MAXIMUM PANEL WIDTH
LESS THAN 10"	12'
10" & ABOVE	15'

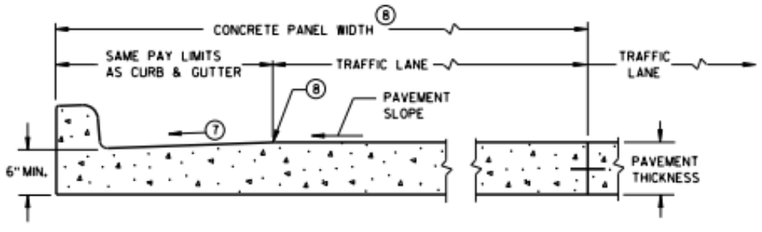

PARTIAL SECTION OF PAVEMENT * WITH INTEGRAL CURB & GUTTER

* BIKE LANE IS NOT SHOWN.

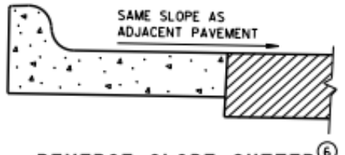

REVERSE SLOPE GUTTER⑥
(TYPICAL FOR ALL CURB & GUTTER TYPES)

CONCRETE CURB & GUTTER

PROJECT NO: RD16-003	HWY: CTH S	COUNTY: KENOSHA	CONSTRUCTION DETAILS	SHEET: 31	E

FILE NAME : _____ PLOT DATE : _____ PLOT BY : _____ PLOT NAME : _____ PLOT SCALE : 1:1

2

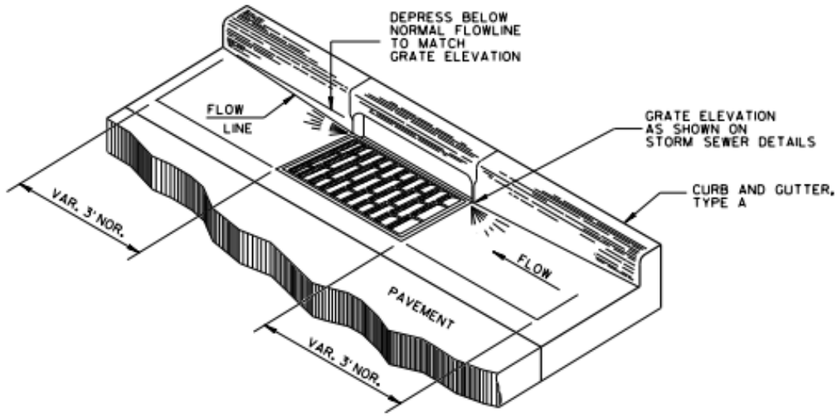

DETAIL OF CURB AND GUTTER AT INLETS

(TYPE H INLET COVER SHOWN)

GENERAL NOTES

DETAILS OF CONSTRUCTION, MATERIALS AND WORKMANSHIP NOT SHOWN ON THIS DRAWING SHALL CONFORM TO THE PERTINENT REQUIREMENTS OF THE CONTRACT.

PAVEMENT TIES AND TIE BARS SHALL BE EPOXY COATED IN CONFORMANCE WITH SUBSECTION 505.2.6.2 OF THE STANDARD SPECIFICATIONS.

UNLESS OTHERWISE SHOWN ON THE TYPICAL CROSS SECTIONS, THE BASE AGGREGATE AND COMMON EXCAVATION LIMITS ARE 2'-0" BEHIND THE BACK OF CURBS.

(1) TIE BARS ARE REQUIRED FOR CURB AND GUTTER TYPES A, G, K, R AND TBTT.

(2) THE BOTTOM OF CURB AND GUTTER MAY BE CONSTRUCTED EITHER LEVEL OR PARALLEL TO THE SLOPE OF THE SUBGRADE OR BASE AGGREGATE PROVIDED A 6" MINIMUM GUTTER THICKNESS IS MAINTAINED.

(9) REFER TO SDD 8D18 AND SDD 8D19 FOR ADDITIONAL DRIVEWAY ENTRANCE CURB DETAILS.

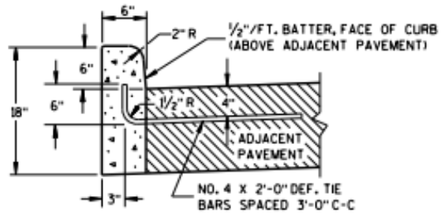

TYPES A (1) & D

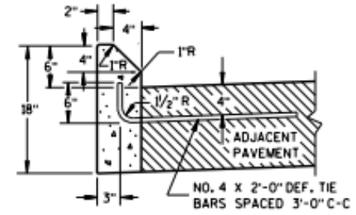

TYPES G (1) & J

CONCRETE CURB

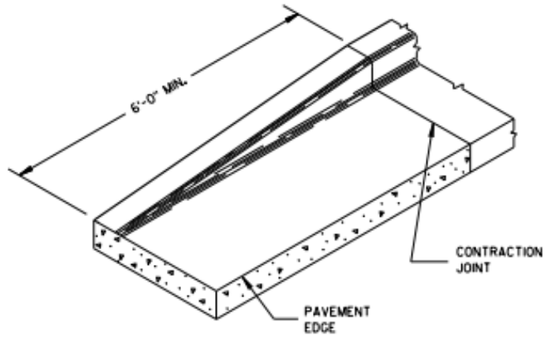

END SECTION CURB & GUTTER

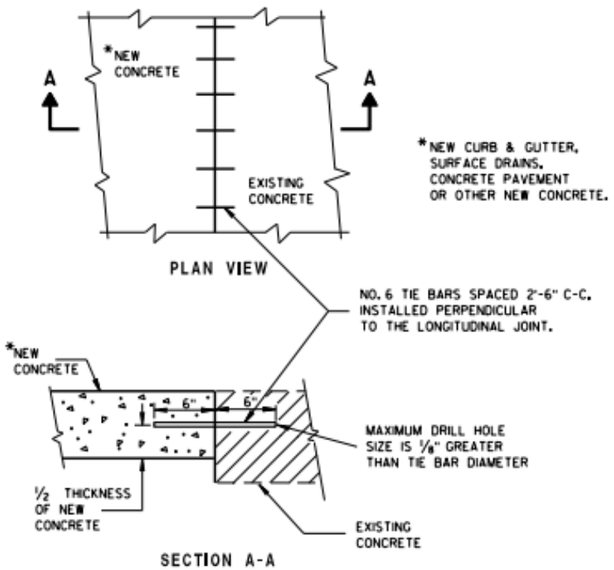

PLAN VIEW

SECTION A-A

TIE BARS DRILLED INTO EXISTING PAVEMENT

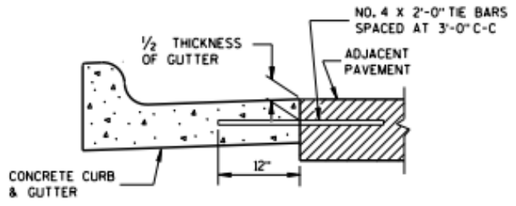

TYPICAL TIE BAR LOCATION (1)

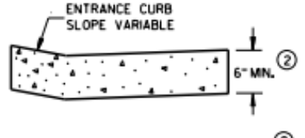

DRIVEWAY ENTRANCE CURB (9)

(WHEN DIRECTED BY THE ENGINEER)

CONCRETE CURB, TIES AND CURB AND GUTTER APPLICATIONS

PROJECT NO: RD16-003	HWY: CTH S	COUNTY: KENOSHA	CONSTRUCTION DETAILS	SHEET: 32	E

FILE NAME : _____ PLOT DATE : _____ PLOT BY : _____ PLOT NAME : _____ PLOT SCALE : 1:1

ASPHALTIC FLUME

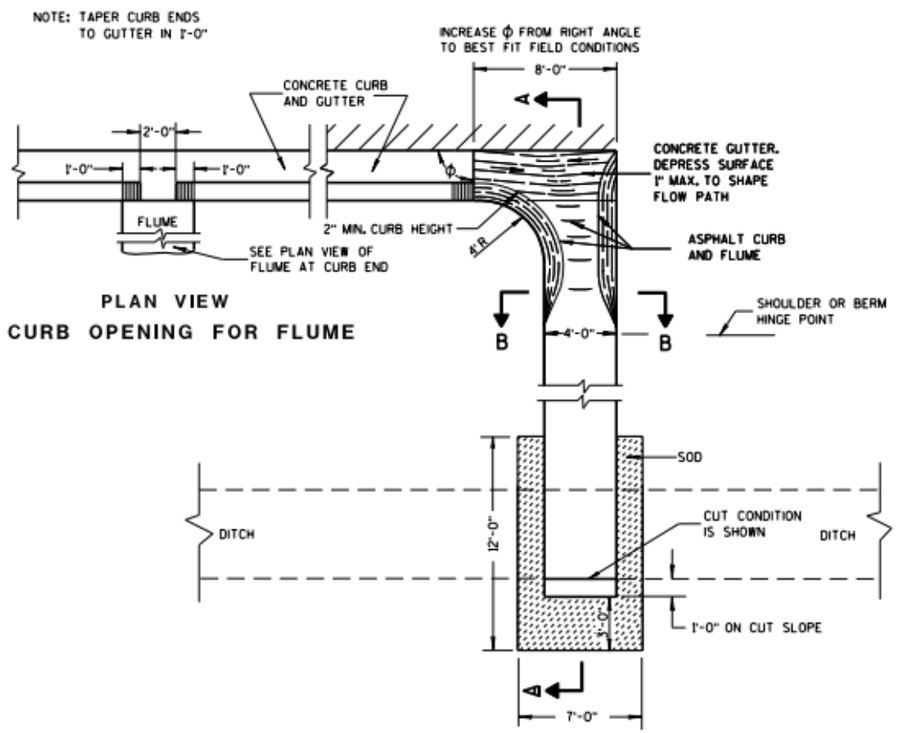

PLAN VIEW
CURB OPENING FOR FLUME

PLAN VIEW
FLUME AT CURB END

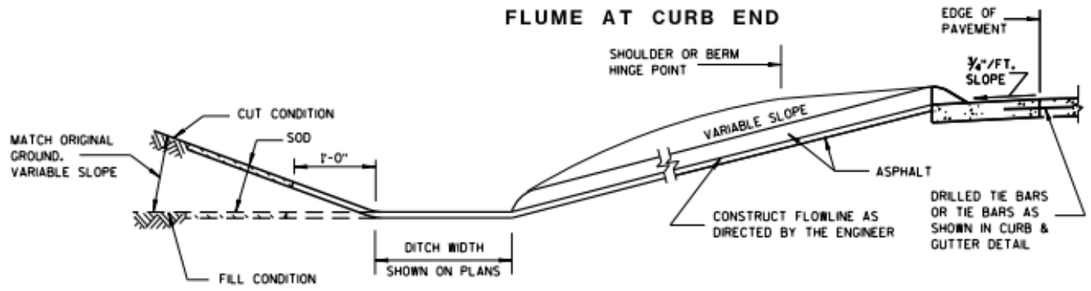

SECTION A-A

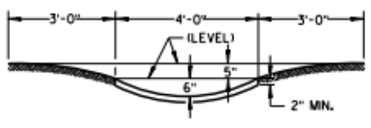

SECTION B-B

GENERAL NOTES

DETAILS OF CONSTRUCTION, MATERIALS AND WORKMANSHIP NOT SHOWN ON THIS DRAWING SHALL CONFORM TO PERTINENT REQUIREMENTS OF THE STANDARD SPECIFICATIONS AND APPLICABLE SPECIAL PROVISIONS.

WELDED STEEL WIRE FABRIC SHALL BE IN ACCORDANCE WITH AASHTO SPECIFICATION M55.

① JOINTS SHALL BE ⅛ TO ¼ INCH WIDE BY 1½ INCHES DEEP AND SPACED AT UNIFORM INTERVALS OF APPROXIMATELY 4 FEET.

② GEOTEXTILE FABRIC TYPE "R" SHALL UNDERLAY THE FULL LENGTH AND WIDTH OF THE CONCRETE SURFACE DRAIN AND RIPRAP.

③ CONCRETE SURFACE DRAIN WITHOUT CURB AND GUTTER MAY BE USED ON BACKSLOPES WHEN SPECIFIED

③ CONCRETE SURFACE DRAIN

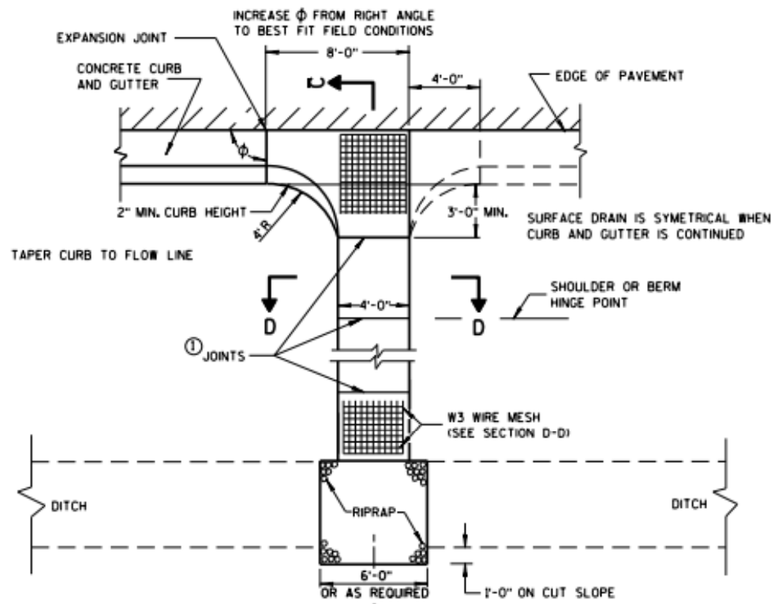

PLAN VIEW

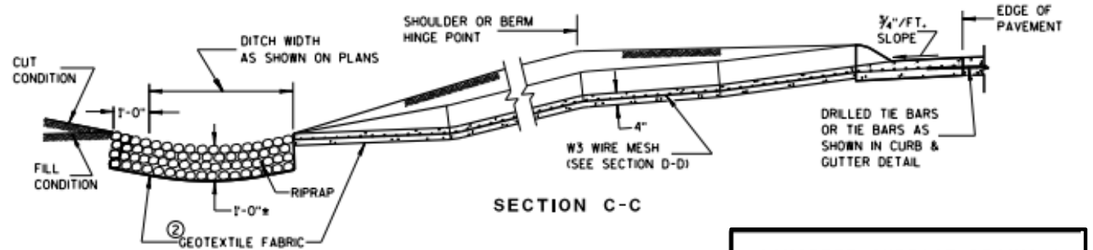

SECTION C-C

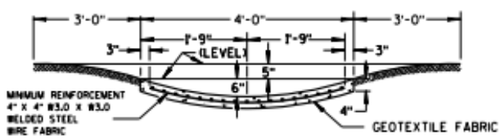

SECTION D-D

CONCRETE SURFACE DRAINS & ASPHALTIC FLUMES

PROJECT NO: RD16-003	HWY: CTH S	COUNTY: KENOSHA	CONSTRUCTION DETAILS	SHEET: 33	E

FILE NAME : _____ PLOT DATE : _____ PLOT BY : _____ PLOT NAME : _____ PLOT SCALE : 1:1

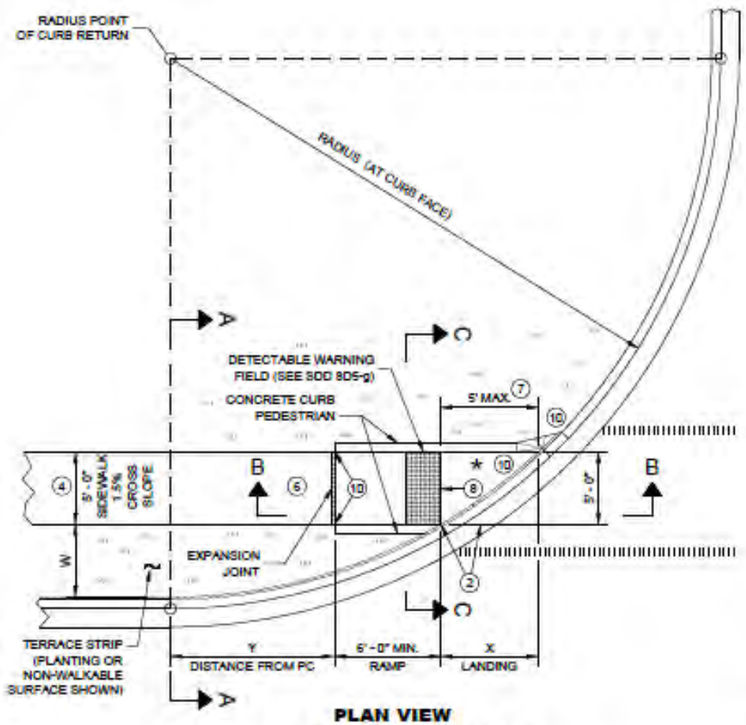

PLAN VIEW

CURB RAMP TYPE 4B

RADIUS (AT CURB FACE)	W = 3' - 0"		W = 4' - 0"		W = 5' - 0"		W = 6' - 0"		W = 7' - 0"		W = 8' - 0"		W = 9' - 0"		W = 10' - 0"	
	X	Y	X	Y	X	Y	X	Y	X	Y	X	Y	X	Y	X	Y
10 FEET	2' - 10 ¼"	0' - 5"	2' - 1"	1' - 4 ½"	1' - 5"	2' - 1"	0' - 10"	2' - 7 ½"	0' - 3 ¼"	3' - 0 ¾"						
15 FEET	4' - 6 ¾"	2' - 1 ¾"	3' - 9"	3' - 5 ¾"	3' - 1 ¾"	4' - 6"	2' - 6 ¾"	5' - 4 ½"	2' - 1"	6' - 1"	1' - 8"	6' - 8 ½"	1' - 3 ½"	7' - 2 ½"	0' - 10 ¾"	7' - 7 ¼"
20 FEET	5' - 9 ¼"	3' - 6 ½"	4' - 11 ½"	5' - 1 ¼"	4' - 3 ¼"	6' - 5 ½"	3' - 8 ¾"	7' - 7"	3' - 3"	8' - 6 ½"	2' - 10"	9' - 4 ½"	2' - 5 ½"	10' - 1 ¼"	2' - 1 ¼"	10' - 9"
30 FEET			6' - 9 ¼"	7' - 11 ¼"	6' - 0 ¼"	9' - 8"	5' - 5"	11' - 1 ¾"	4' - 10 ¾"	12' - 5 ¾"	4' - 5 ½"	13' - 7 ¾"	4' - 0 ¼"	14' - 8 ½"	3' - 8 ½"	15' - 8 ¼"
40 FEET									6' - 1 ¾"	15' - 8 ½"	5' - 8"	17' - 2"	5' - 3"	18' - 5 ¾"	4' - 10 ¾"	19' - 8 ¼"
50 FEET															5' - 10 ¼"	23' - 2"

INTERMEDIATE RADII CAN BE INTERPOLATED
DIMENSION "Y" IS CALCULATED BASED ON 6'-0" RAMP LENGTH
DIMENSION "X" IS CALCULATED BASED ON 5'-0" SIDEWALK WIDTH

LEGEND

- ½" EXPANSION JOINT SIDEWALK
- CONTRACTION JOINT SIDEWALK
- PAVEMENT MARKING CROSSWALK (WHITE)

GENERAL NOTES

AVOID PLACING DRAINAGE STRUCTURES, JUNCTION BOXES OR OTHER OBSTRUCTIONS IN FRONT OF RAMP ACCESS AREAS.

DETAILS OF CONSTRUCTION, MATERIALS AND WORKMANSHIP NOT SHOWN ON THIS DRAWING SHALL CONFORM TO THE PERTINENT REQUIREMENTS OF THE STANDARD SPECIFICATIONS AND THE APPLICABLE SPECIAL PROVISIONS.

DETECTABLE WARNING FIELDS THAT ARE INSTALLED AS A GROUP OR SIDE BY SIDE, SHALL BE FROM THE SAME MANUFACTURER.

(2) GRADE CHANGE BETWEEN GUTTER FLAG SLOPE AND THE CURB RAMP SLOPE SHALL NOT EXCEED 11%. MAXIMUM GUTTER FLAG SLOPE IS 4%. PROVIDE LONGITUDINAL DRAINAGE AROUND CURB AND AWAY FROM CURB RAMP. NO VERTICAL LIPS OR DISCONTINUITIES GREATER THAN ¼ - INCH ARE ALLOWED. SLOPE OF CURB HEAD OPENING SHALL MATCH THE RAMP SLOPE, MINIMALLY 1.5% AND NOT TO EXCEED 7%. WHEN ADJACENT TO 1.5% LANDING, CONSTRUCT CURB HEAD OPENING AT 1.5% IN THE DIRECTION OF PEDESTRIAN TRAVEL.

(3) AN 8.33% CURB RAMP SLOPE IS ALLOWABLE WITH FLATTENED GUTTER FLAG SLOPE AND NOT TO EXCEED 11% GRADE CHANGE.

(4) ±0.5% CONSTRUCTION TOLERANCE IN SIDEWALK CROSS SLOPE. THE SIDEWALK CROSS SLOPE SHALL NOT EXCEED 2% WITHOUT PRIOR APPROVAL FROM THE ENGINEER.

(5) PROVIDE A LEVEL LANDING (MAXIMUM 2% SLOPE) IN ANY DIRECTION OF PEDESTRIAN TRAVEL. STANDARD LEVEL LANDING SIZE IS 5 FEET BY 5 FEET.

(7) WHEN THIS GRADE BREAK DISTANCE EXCEEDS 5 FEET, USE RADIAL DETECTABLE WARNING FIELD PER SDD 8D5-f.

(8) PROVIDE GRADE BREAK PERPENDICULAR TO DIRECTION OF WHEELCHAIR TRAVEL.

(10) INSTALL TRANSITION NOSE (INCIDENTAL TO OTHER PAY ITEMS). DO NOT MARK TRANSITION NOSE.

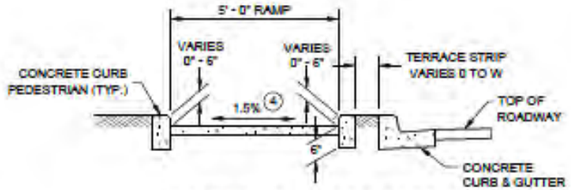

SECTION C - C FOR TYPE 4B

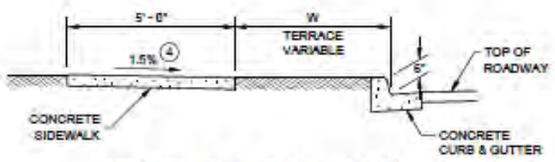

SECTION A - A FOR TYPE 4B

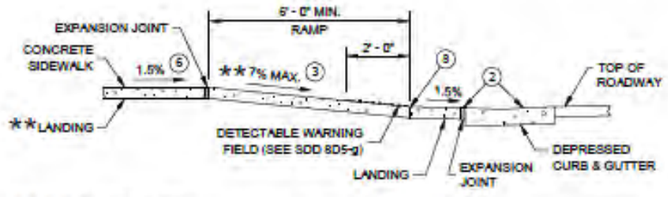

** IF RAMP SLOPE IS LESS THAN 5.0%, THEN NO ADJACENT UPHILL LANDING IS REQUIRED

SECTION B - B FOR TYPE 4B AND TYPE 4B1

* MAXIMUM 2.0% SLOPE IN ALL DIRECTIONS IF FRONT OF GRADE BREAK

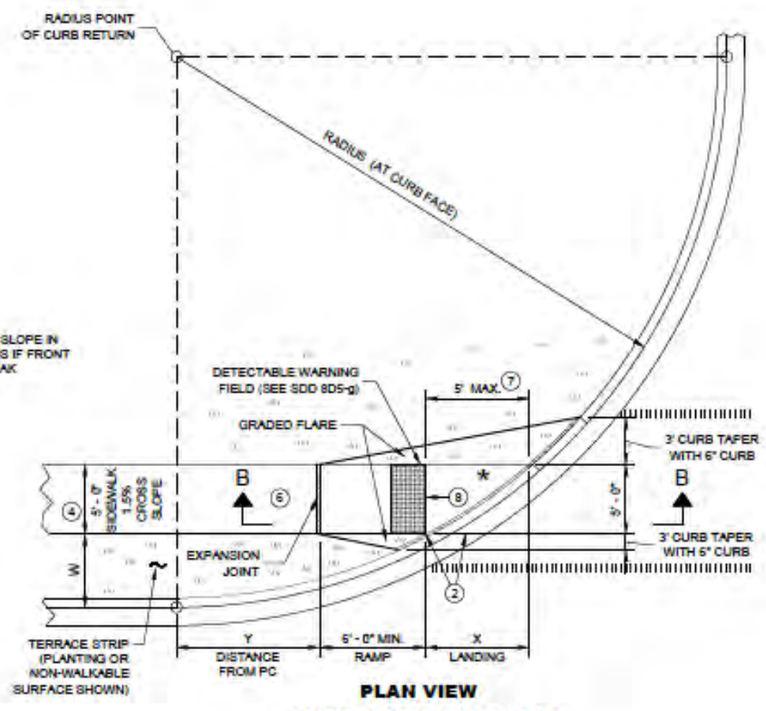

PLAN VIEW

CURB RAMP TYPE 4B1

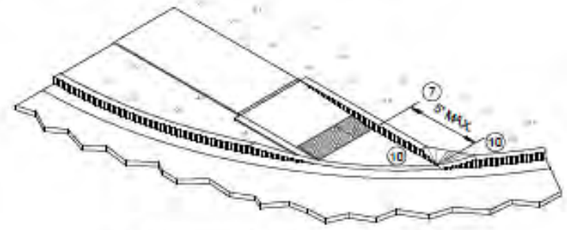

ISOMETRIC VIEW FOR TYPE 4B

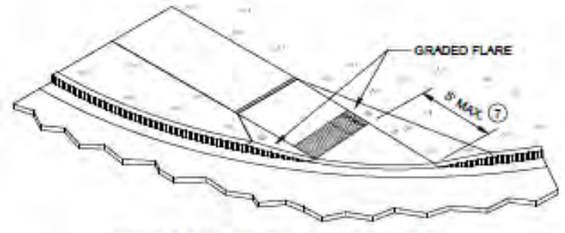

ISOMETRIC VIEW FOR TYPE 4B1

CURB RAMPS TYPE 4B AND 4B1

PROJECT NO: RD16-003	HWY: CTH S	COUNTY: KENOSHA	CONSTRUCTION DETAILS	SHEET: 34	E

FILE NAME : _____ PLOT DATE : _____ PLOT BY : _____ PLOT NAME : _____ PLOT SCALE : 1:1

2

RADIAL DETECTABLE WARNING FIELD PLACEMENT WHEN 5 FOOT GRADE BREAK DISTANCE PER SDD 8D5-c IS EXCEEDED

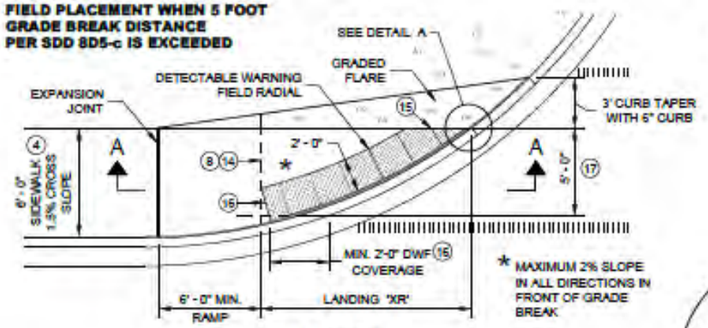

PLAN VIEW

CURB RAMP TYPE 4A1

(GRADE BREAK DISTANCE GREATER THAN 5 FEET)

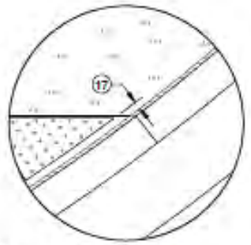

DETAIL A

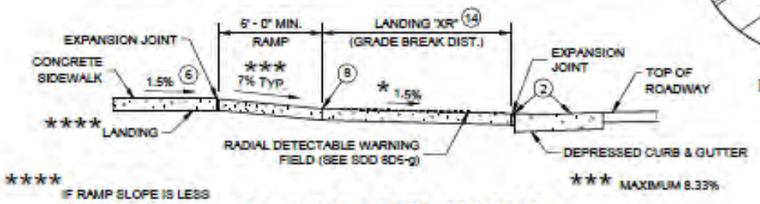

SECTION A - A FOR TYPE 4A1

RADIAL DETECTABLE WARNING FIELD PLACEMENT WHEN 5 FOOT GRADE BREAK DISTANCE PER SDD 8D5-d IS EXCEEDED

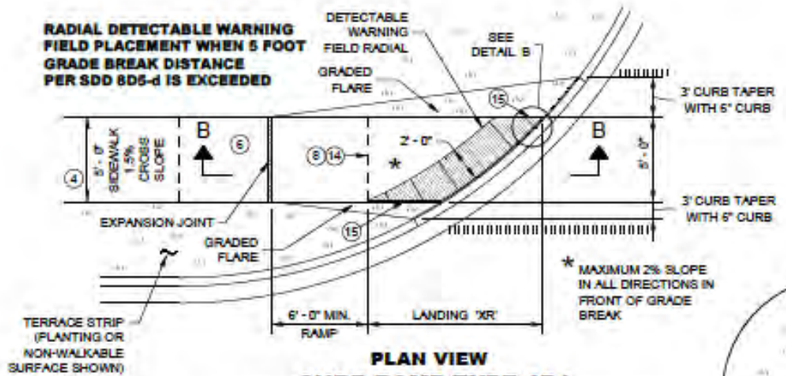

PLAN VIEW

CURB RAMP TYPE 4B1

(GRADE BREAK DISTANCE GREATER THAN 5 FEET)

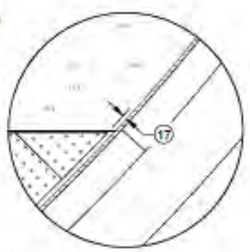

DETAIL B

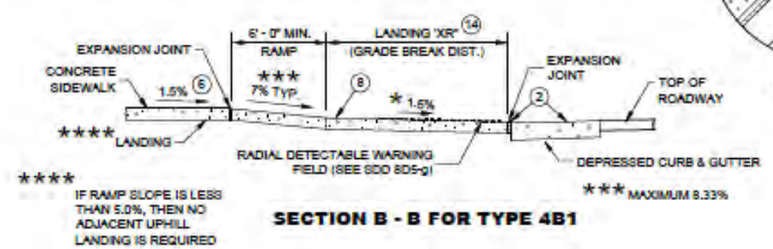

SECTION B - B FOR TYPE 4B1

LEGEND

- ½" EXPANSION JOINT SIDEWALK
- CONTRACTION JOINT SIDEWALK
- PAVEMENT MARKING CROSSWALK (WHITE)

GENERAL NOTES

AVOID PLACING DRAINAGE STRUCTURES, JUNCTION BOXES OR OTHER OBSTRUCTIONS IN FRONT OF RAMP ACCESS AREAS.

DETAILS OF CONSTRUCTION, MATERIALS AND WORKMANSHIP NOT SHOWN ON THIS DRAWING SHALL CONFORM TO THE PERTINENT REQUIREMENTS OF THE STANDARD SPECIFICATIONS AND THE APPLICABLE SPECIAL PROVISIONS.

DETECTABLE WARNING FIELDS THAT ARE INSTALLED AS A GROUP OR SIDE BY SIDE, SHALL BE FROM THE SAME MANUFACTURER.

APPLY RADIAL DETECTABLE WARNING PLACEMENT SIMILARLY FOR TYPE 4A AND 4A1 CURB RAMPS AND SIMILARLY FOR TYPE 4B AND 4B1 CURB RAMPS. TYPE 4A AND 4B CURB RAMPS ARE NOT SHOWN.

REFER TO SDD 8D5-g FOR ADDITIONAL RADIAL PLATE REQUIREMENTS.

FIELD CUTS AT INTERMEDIATE JOINTS WITHIN THE RADIAL DETECTABLE WARNING FILED ARE PROHIBITED.

DETERMINE FINAL RADIAL WARNING FIELD CONFIGURATION AD IT'S INDIVIDUAL PLATE LOCATIONS. PERFORM PRE-LAYOUT PRIOR TO PLACEMENT IN PLASTIC CONCRETE. FOLLOW MANUFACTURER'S PRODUCT LIST AND INSTALLATION RECOMMENDATIONS.

(2) GRADE CHANGE BETWEEN GUTTER FLAG SLOPE AND THE CURB RAMP SLOPE SHALL NOT EXCEED 11%. MAXIMUM GUTTER FLAG SLOPE IS 4%. PROVIDE LONGITUDINAL DRAINAGE AROUND CURB AND AWAY FROM CURB RAMP. NO VERTICAL LIPS OR DISCONTINUITIES GREATER THAN ¼ - INCH ARE ALLOWED. SLOPE OF CURB HEAD OPENING SHALL MATCH THE RAMP SLOPE, MINIMALLY 1.5% AND NOT TO EXCEED 7%. WHEN ADJACENT TO 1.5% LANDING, CONSTRUCT CURB HEAD OPENING AT 1.5% IN THE DIRECTION OF PEDESTRIAN TRAVEL.

(3) AN 8.33% CURB RAMP SLOPE IS ALLOWABLE WITH FLATTENED GUTTER FLAG SLOPE AND NOT TO EXCEED 11% GRADE CHANGE.

(4) ±0.5% CONSTRUCTION TOLERANCE IN SIDEWALK CROSS SLOPE. THE SIDEWALK CROSS SLOPE SHALL NOT EXCEED 2% WITHOUT PRIOR APPROVAL FROM THE ENGINEER.

(6) PROVIDE A LEVEL LANDING (MAXIMUM 2% SLOPE) IN ANY DIRECTION OF PEDESTRIAN TRAVEL. STANDARD LANDING SIZE IS 5 FEET BY 5 FEET.

(8) PROVIDE GRADE BREAK PERPENDICULAR TO DIRECTION OF WHEELCHAIR TRAVEL.

(14) CONSULT ENGINEER IF GRADE BREAK LOCATION (END OF LANDING DIMENSION "XR") REQUIRES FIELD ADJUSTMENT WHEN ESTABLISHING FINAL RADIAL DETECTABLE WARNING FIELD LOCATION.

(15) FIELD SAW CUTS ALONG RADIAL DETECTABLE WARNING PLATES WILL BE NECESSARY TO MATCH EACH CURB RAMP EDGE. AVOID CUTTING THROUGH DOMES WHENEVER POSSIBLE. MAKE FIELD CUTS TRUE TO LINE AND WITHIN ½" DEVIATION. SMOOTH EDGES OF FIELD CUT PLATES.

(16) USE 1' X 2' RECTANGULAR END PLATE AT END OF TYPE 4A1 RAMP AND PROVIDE MINIMUM 2' - 0" DETECTABLE WARNING FIELD COVERAGE (IN DIRECTION OF PEDESTRIAN TRAVEL) ALONG THE ENTIRE CURB RAMP WIDTH.

(17) A MAXIMUM 3 INCH CONCRETE BORDER WITH IS ALLOWABLE IN FROM OF RADIAL DETECTABLE WARNING FIELD FOR CONSTRUCTABILITY PURPOSES. CONCRETE BORDER WIDTH MAY VARY UP TO 1 INCH.

RADIAL DETECTABLE WARNING FIELD PLACEMENT WHEN 5 FOOT GRADE BREAK DISTANCE PER SDD 8D5-b IS EXCEEDED

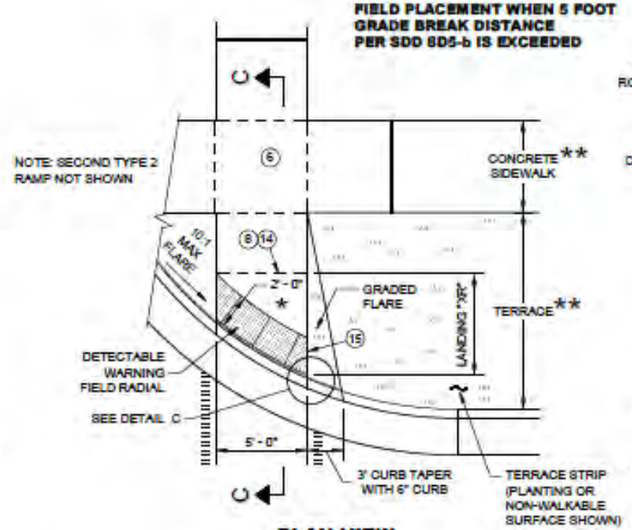

PLAN VIEW

CURB RAMP TYPE 2

(GRADE BREAK DISTANCE GREATER THAN 5 FEET)

(ON LINE WITH SIDEWALK)

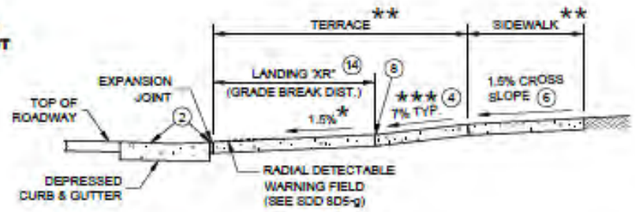

SECTION C - C FOR TYPE 2

* MAXIMUM 2% SLOPE IN ALL DIRECTIONS IN FRONT OF GRADE BREAK

** WIDTH SHOWN ELSEWHERE IN THE PLANS

*** MAXIMUM 8.33%

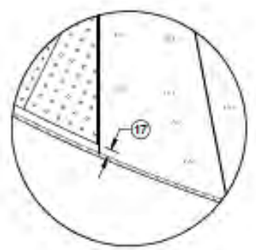

DETAIL C

CURB RAMPS
RADIAL DETECTABLE WARNING FIELD APPLICATIONS

PROJECT NO: RD16-003	HWY: CTH S	COUNTY: KENOSHA	CONSTRUCTION DETAILS	SHEET: 35	E

FILE NAME : _____ PLOT DATE : _____ PLOT BY : _____ PLOT NAME : _____ PLOT SCALE : 1:1

2

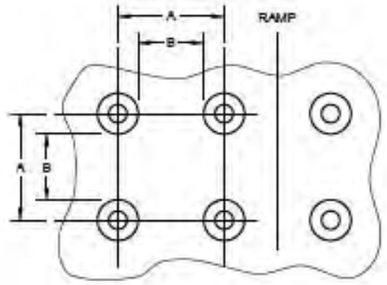

PLAN VIEW

	MIN.	MAX.
A	1.6"	2.4"
B	0.65"	1.5"
C	*	*
D	0.9"	1.4"

* THE C DIMENSION IS 50% TO 65% OF THE D DIMENSION.

ELEVATION VIEW

TRUNCATED DOMES
DETECTABLE WARNING PATTERN DETAIL

GENERAL NOTES

DETECTABLE WARNING FIELDS THAT ARE INSTALLED AT A CURB RAMP SHALL BE FROM THE SAME MANUFACTURER.

PLACE ALL DETECTABLE WARNING FIELD SYSTEMS IN ACCORDANCE TO THE MANUFACTURER'S RECOMMENDATION.

FIELD CUTS AT INTERMEDIATE JOINTS WITHIN THE RADIAL DETECTABLE WARNING FILED ARE PROHIBITED.

DETERMINE FINAL RADIAL WARNING FIELD CONFIGURATION AND ITS INDIVIDUAL PLATE LOCATIONS. PERFORM PRE-LAYOUT PRIOR TO PLACEMENT IN PLASTIC CONCRETE. FOLLOW MANUFACTURER'S PRODUCT LIST AND INSTALLATION RECOMMENDATIONS.

FOR RADIAL DETECTABLE WARNING FIELD APPLICATIONS WHERE STANDARD RADIAL PLATES ARE NOT AVAILABLE AT AN INTERSECTION CURB RADIUS, A COMBINATION OF SQUARE OR RECTANGULAR PLATES AND RADIAL PLATES MAY BE USED TO FORM RADIAL CONFIGURATION. RADIAL WEDGE PLATES IN COMBINATION WITH SQUARE PLATES ARE ALSO ACCEPTABLE. FOLLOW MANUFACTURER'S RECOMMENDATIONS.

REFER TO CONTRACT AND STANDARD SPECIFICATIONS FOR FIELD CUTTING REQUIREMENTS.

DO NOT EMBED IN CONCRETE ANY FIELD-CUT PLATES WITH CUT EDGES SHORTER THAN 6 INCHES. CONSULT WITH MANUFACTURER FOR RE-DRILLING AND ANCHORING REQUIREMENTS OF FIELD-CUT PLATES.

(15) FIELD SAW CUTS ALONG RADIAL DETECTABLE WARNING PLATES WILL BE NECESSARY TO MATCH EACH CURB RAMP EDGE. AVOID CUTTING THROUGH DOMES WHENEVER POSSIBLE. MAKE FIELD CUTS TRUE TO LINE AND WITHIN ¼" DEVIATION. SMOOTH EDGES OF FIELD CUT PLATES.

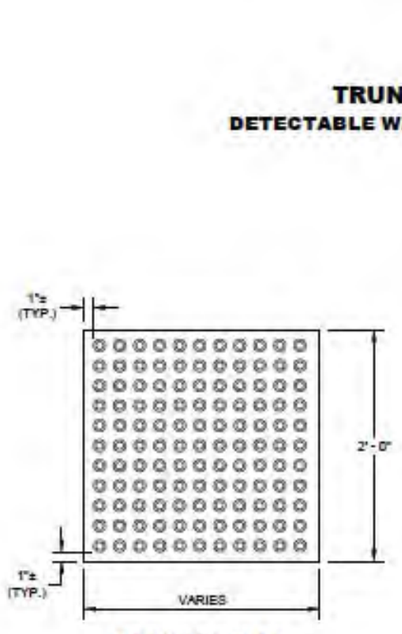

RECTANGULAR PLATES

RADIAL PLATES

PLAN VIEW
DETECTABLE WARNING FIELDS (TYPICAL)

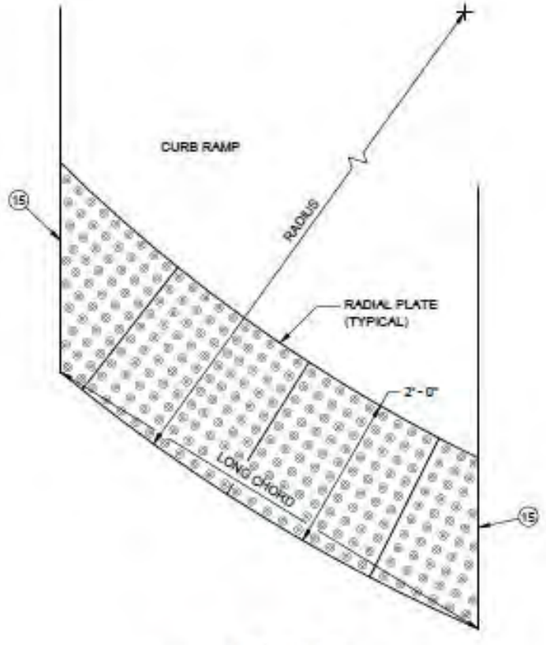

PLAN VIEW
RADIAL DETECTABLE WARNING FIELD ATTRIBUTES

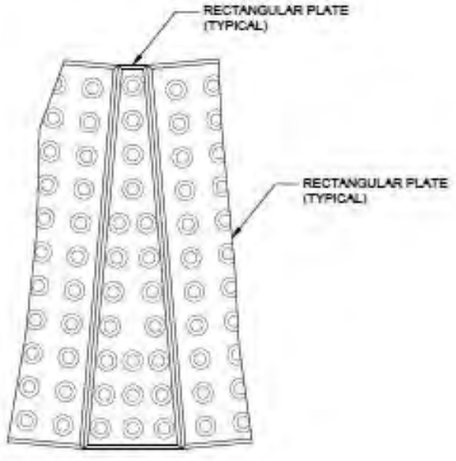

PLAN VIEW
RADIAL WEDGE PLATE CONNECTION DETAIL

CURB RAMPS
RECTANGULAR AND RADIAL DETECTABLE WARNING PLATES

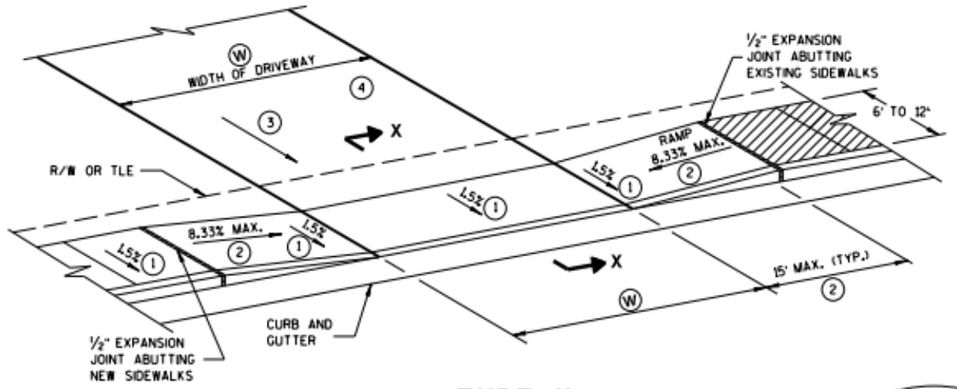

TYPE X
SIDEWALK ABUTS CURB & GUTTER
TERRACE VARIES 0 TO 3 FEET

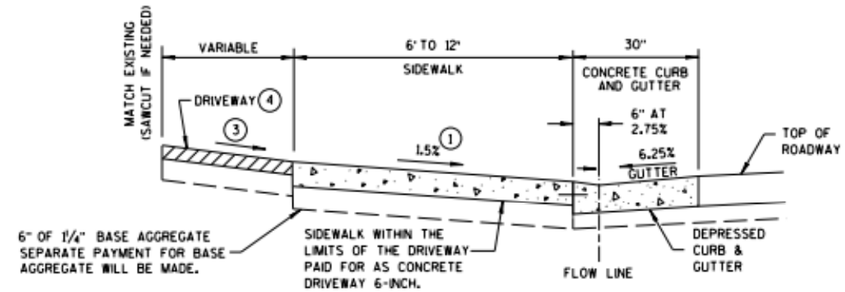

SECTION X-X

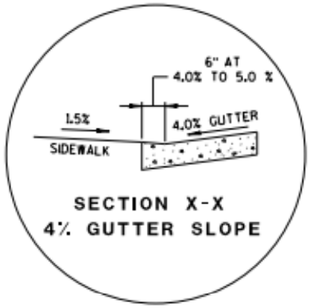

SECTION X-X
4% GUTTER SLOPE

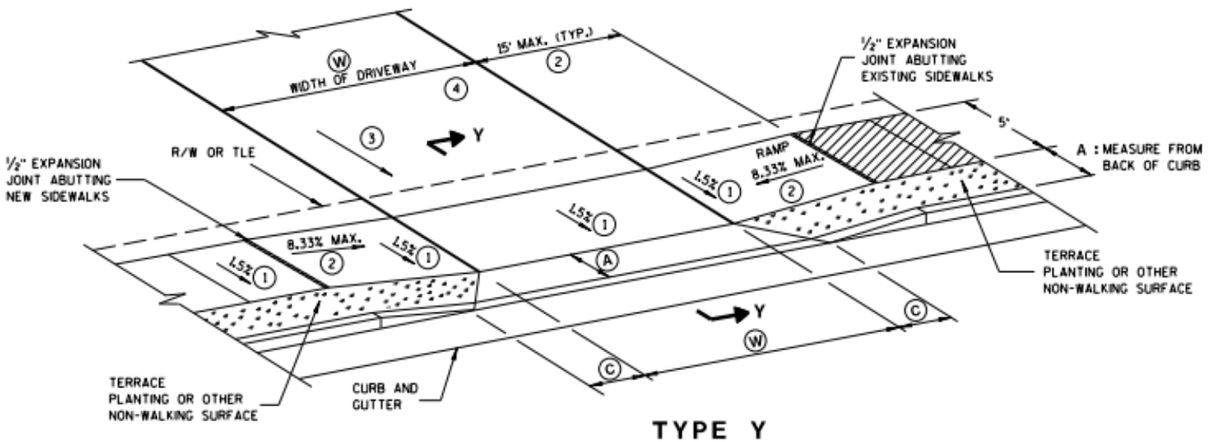

TYPE Y
SIDEWALK WITH NARROWER TERRACE
TERRACE VARIES 4 TO 6 FEET

GENERAL NOTES

PROVIDE CONSTRUCTION JOINTS ALONG THE CENTER OF THE CONCRETE FOR DRIVEWAYS UNDER 20 FEET IN WIDTH AND AT THE THIRD POINTS OVER 20 FEET IN WIDTH.

(W) IS SHOWN ON PLAN AND PROFILE SHEETS.

OFFSETS, ELEVATIONS, AND PERCENT GRADE ARE SHOWN ON THE CROSS SECTIONS.

(1) CONSTRUCTION TOLERANCE OF 0.5% ± FOR SIDEWALK CROSS SLOPE. THE SIDEWALK CROSS SLOPE SHALL NOT EXCEED 2%.

(2) THE SIDEWALK RAMP MAXIMUM RUNNING SLOPE SHALL NOT REQUIRE THE RAMP LENGTH TO EXCEED 15 FEET TO AVOID CHASING THE SLOPE INDEFINITELY WHEN CONNECTING TO STEEP GRADES. WHEN APPLYING THE 15 FOOT MAXIMUM LENGTH, THE RUNNING SLOPE OF THE SIDEWALK SHALL BE AS FLAT AS FEASIBLE AND NOT EXCEED THE LONGITUDINAL GRADE OF THE ROADWAY. SLOPE SIDEWALK RAMP TOWARD APRON AS SHOWN WHERE THERE IS NO TERRACE OR WHERE THE TERRACE WIDTH IS LESS THAN 6 FEET WIDE.

(3) DRIVEWAY SLOPES: DESIRABLE MAXIMUM
- 10.5% UP AWAY FROM SIDEWALK (SAG)
- 8.5% DOWN AWAY FROM SIDEWALK (CREST)
- ABSOLUTE MAXIMUM 15% FOR BOTH CREST AND SAG

(4) DRIVEWAY TYPES
- 6-INCH CONCRETE DRIVEWAY PAVEMENT OVER 6-INCH BASE AGGREGATE
- 2-INCH TO 3-INCH ASPHALTIC SURFACE OVER 6-INCH BASE AGGREGATE
- 6-INCH BASE AGGREGATE (MAY BE INCREASED FOR CLAY SUBGRADES)

(W): 12" MIN. - 24' MAX. RESIDENTIAL AND NON-COMMERCIAL (PE & FE)
16' MIN. - 35' MAX. COMMERCIAL (CE)

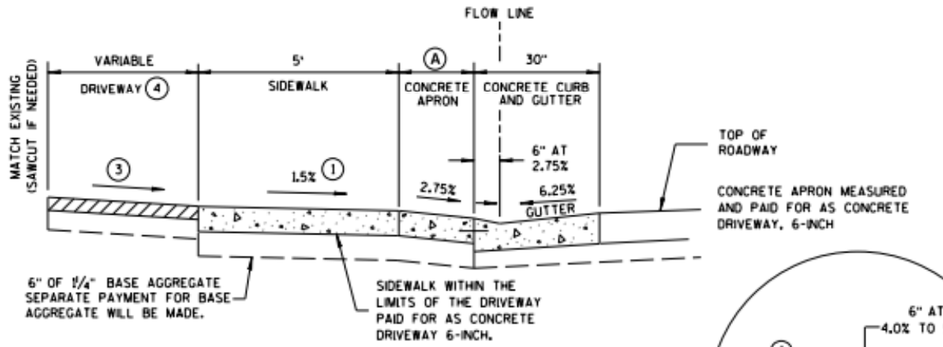

NOTE: SIDEWALK MAY BE DEPRESSED IN DRIVEWAY AREAS

SECTION Y-Y

DRIVEWAY DETAIL
WITH CONCRETE CURB & GUTTER
(URBAN AND SUBURBAN)

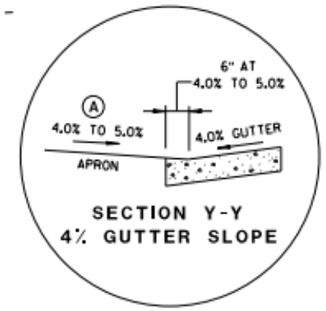

SECTION Y-Y
4% GUTTER SLOPE

TABLE Y

(A) FEET	(C) FEET
3.5'	2.0'
4.5'	3.0'
5.5'	3.5'

DRIVEWAY AND SIDEWALK RAMPS
TYPES X & Y

NOT TO SCALE

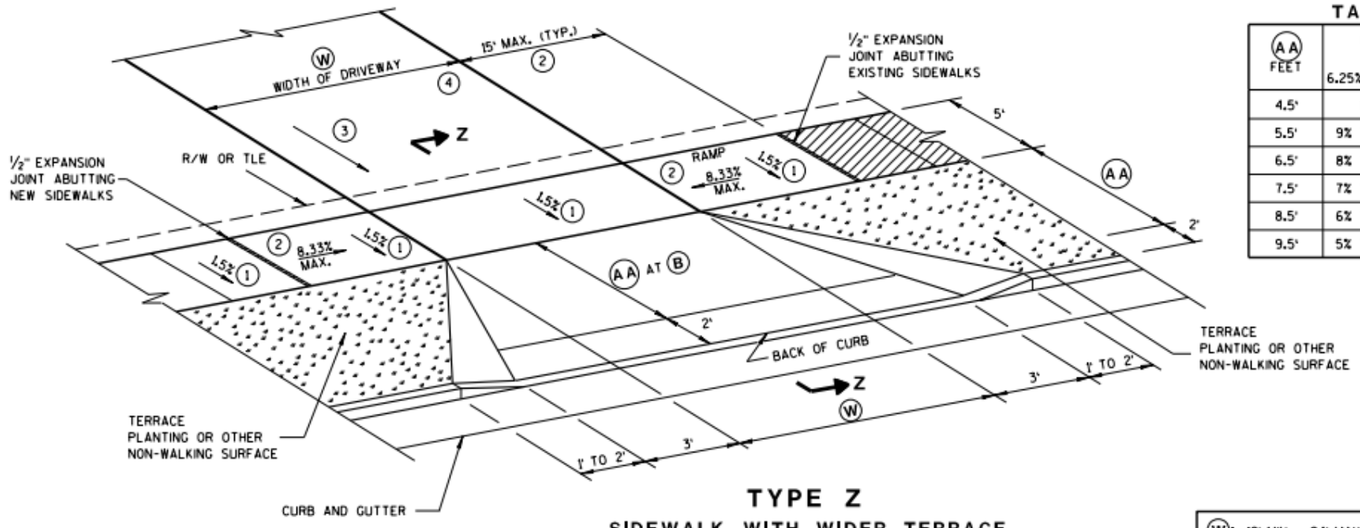

TYPE Z

SIDEWALK WITH WIDER TERRACE

TERRACE VARIES 7 TO 12 FEET

TABLE Z

(AA) FEET	(B) % 6.25% GUTTER	(B) % 4% GUTTER
4.5'	11.5%	9% TO 11.5%
5.5'	9% TO 11.5%	8% TO 11.5%
6.5'	8% TO 11.5%	6% TO 11.5%
7.5'	7% TO 11.5%	6% TO 11.5%
8.5'	6% TO 11.5%	5% TO 11.5%
9.5'	5% TO 11.5%	4% TO 11.5%

(W): 12' MIN. - 24' MAX. RESIDENTIAL AND NON-COMMERCIAL (PE & FE)
16' MIN. - 35' MAX. COMMERCIAL (CE)

GENERAL NOTES

PROVIDE CONSTRUCTION JOINTS ALONG THE CENTER OF THE CONCRETE FOR DRIVEWAYS UNDER 20 FEET IN WIDTH AND AT THE THIRD POINTS OVER 20 FEET IN WIDTH.

(W) IS SHOWN ON PLAN AND PROFILE SHEETS.

OFFSETS, ELEVATIONS, AND PERCENT GRADE ARE SHOWN ON THE CROSS SECTIONS.

(1) CONSTRUCTION TOLERANCE OF 0.5% ± FOR SIDEWALK CROSS SLOPE. THE SIDEWALK CROSS SLOPE SHALL NOT EXCEED 2%.

(2) THE SIDEWALK RAMP MAXIMUM RUNNING SLOPE SHALL NOT REQUIRE THE RAMP LENGTH TO EXCEED 15 FEET TO AVOID CHASING THE SLOPE INDEFINITELY WHEN CONNECTING TO STEEP GRADES. WHEN APPLYING THE 15 FOOT MAXIMUM LENGTH, THE RUNNING SLOPE OF THE SIDEWALK SHALL BE AS FLAT AS FEASIBLE AND NOT EXCEED THE LONGITUDINAL GRADE OF THE ROADWAY.

(3) DRIVEWAY SLOPES: DESIRABLE MAXIMUM
- 10.5% UP AWAY FROM SIDEWALK (SAG)
- 8.5% DOWN AWAY FROM SIDEWALK (CREST)
- ABSOLUTE MAXIMUM 15% FOR BOTH CREST AND SAG

(4) DRIVEWAY TYPES
- 6-INCH CONCRETE DRIVEWAY PAVEMENT OVER 6-INCH BASE AGGREGATE
- 2-INCH TO 3-INCH ASPHALTIC SURFACE OVER 6-INCH BASE AGGREGATE
- 6-INCH BASE AGGREGATE (MAY BE INCREASED FOR CLAY SUBGRADES)

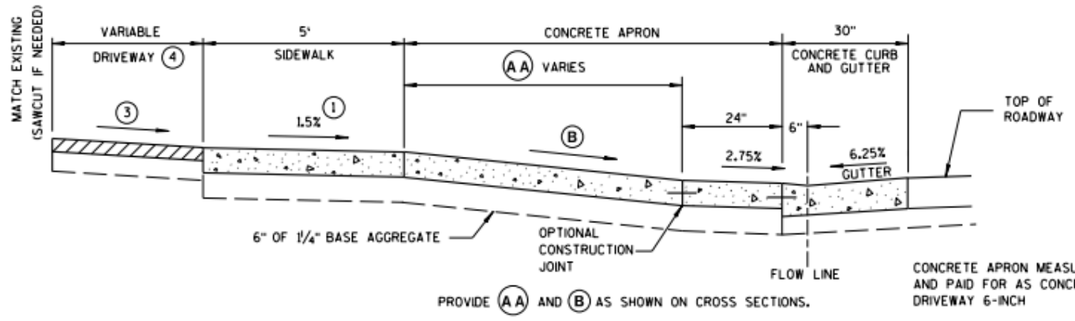

6.25% GUTTER SLOPE

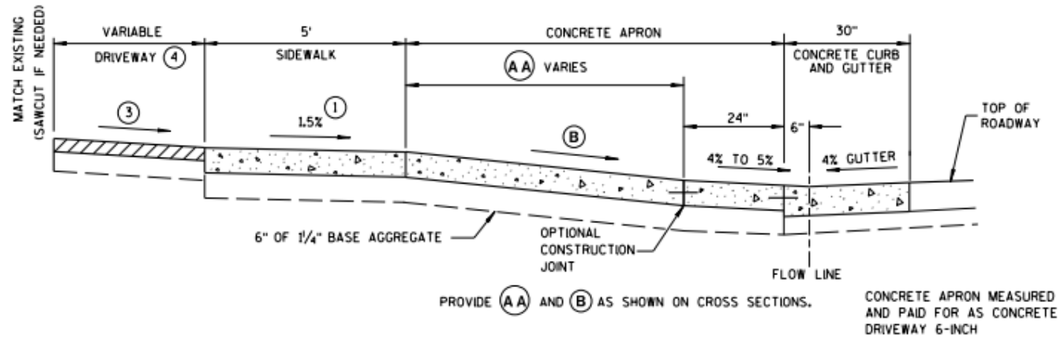

4% GUTTER SLOPE

NOTE: SIDEWALK MAY BE DEPRESSED IN DRIVEWAY AREAS FOR B VALUES NOT SHOWN IN TABLE Z.

SIDEWALK WITHIN THE LIMITS OF THE DRIVEWAY PAID FOR AS CONCRETE DRIVEWAY 6-INCH.

SEPARATE PAYMENT FOR BASE AGGREGATE WILL BE MADE.

SECTION Z-Z

DRIVEWAY DETAIL WITH CONCRETE CURB & GUTTER

(URBAN AND SUBURBAN)

DRIVEWAY AND SIDEWALK RAMPS TYPE Z

NOT TO SCALE

2

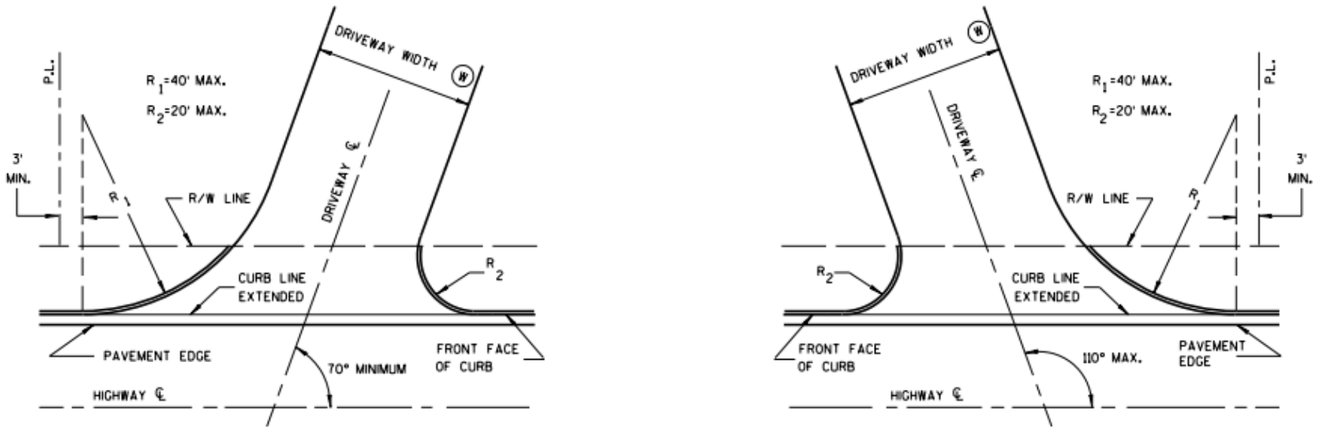

SKEWED DRIVEWAY DETAILS
(COMMERCIAL AND NON-COMMERCIAL)

SIDEWALK NOT SHOWN

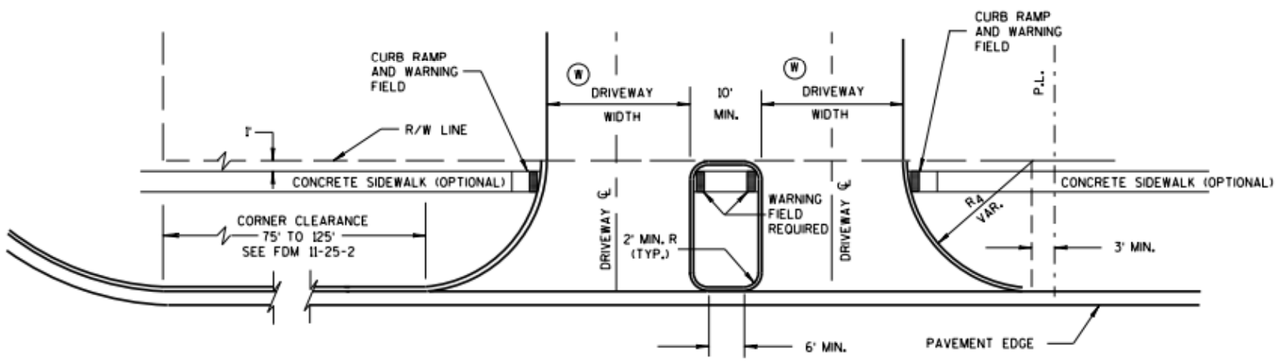

DRIVEWAY LOCATION AND SPACING DETAILS

SIDEWALK SHOWN

NOTES

A MAXIMUM RADIUS OF 10 FEET SHALL BE USED FOR NON-COMMERCIAL PRIVATE ENTRANCES. RADII FOR COMMERCIAL DRIVEWAYS SHALL BE DETERMINED BY THE ENGINEER BASED ON TRAFFIC AND DRIVEWAY PERMIT RESTRICTIONS.

THE MINIMUM ANGLE OF INTERSECTION BETWEEN THE DRIVEWAY AND HIGHWAY CENTERLINES SHALL BE 70°.

ALL CURVILINEAR PRIVATE ENTRANCE OUTLINES SHALL BE CONTAINED WITHIN THE HIGHWAY R/W.

NO DRIVEWAY SHALL BE BUILT WITHIN 3 FEET OF THE PROPERTY LINE EXCEPT FOR EXISTING JOINT DRIVEWAY SHARED BY TWO OWNERS.

Ⓦ DRIVEWAY WIDTHS:

COMMERCIAL - 35' MAX., 16' MIN.

RESIDENTIAL AND NON-COMMERCIAL - 24' MAX., 12' MIN.

DRIVEWAYS WITH CURB & GUTTER RETURNS

2

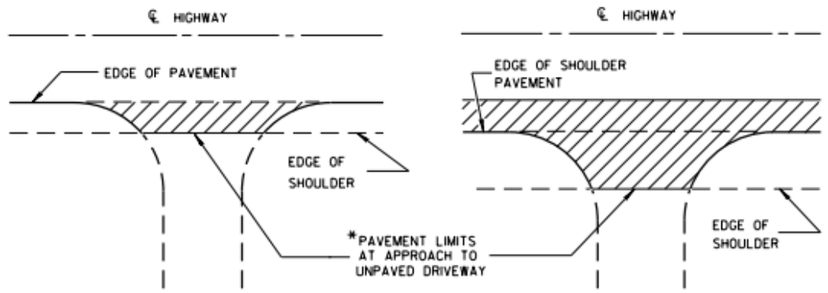

*WHERE DRIVEWAY IS PAVED, APPROACH PAVEMENT SHOULD BE EXTENDED TO MATCH DRIVEWAY PAVEMENT.

PLAN VIEW
(UNPAVED SHOULDER ON HIGHWAY)

PLAN VIEW
(PAVED SHOULDER ON HIGHWAY)

RURAL DRIVEWAY INTERSECTION DETAIL
(NO CURB & GUTTER OR SIDEWALK)

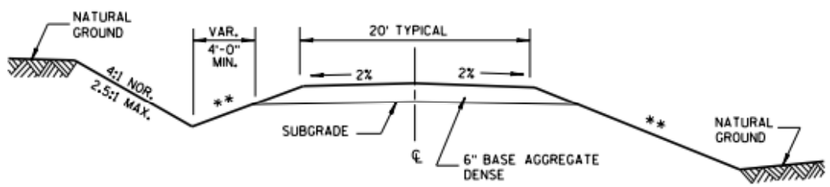

IN CUT IN FILL

TYPICAL CROSS SECTION FOR PRIVATE DRIVE OR FIELD ENTRANCE AGGREGATE SURFACE

** SLOPE CAN VARY WITH SPEED. SEE 11-45-2.6.2.

POSTED SPEED MPH	MAX. SLOPE
<35	4:1
≥35 TO <60	6:1
≥60	10:1

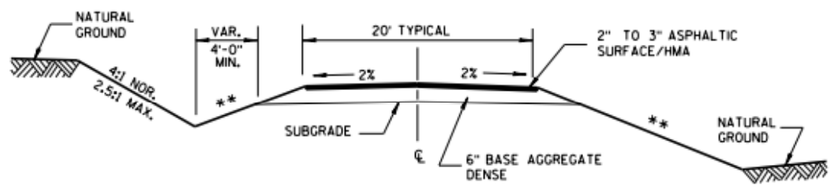

IN CUT IN FILL

TYPICAL CROSS SECTION FOR PRIVATE DRIVE OR FIELD ENTRANCE ASPHALTIC SURFACE

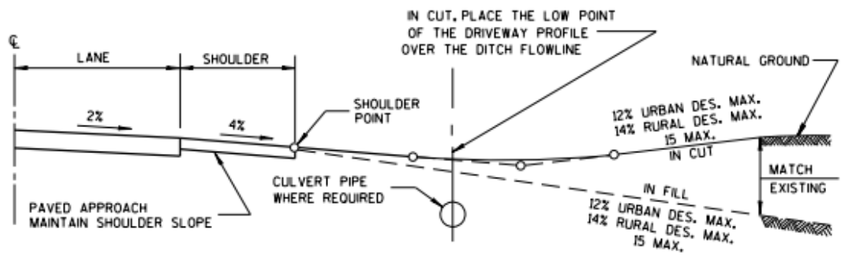

TYPICAL DRIVEWAY PROFILES

DRIVEWAYS WITHOUT CURB & GUTTER

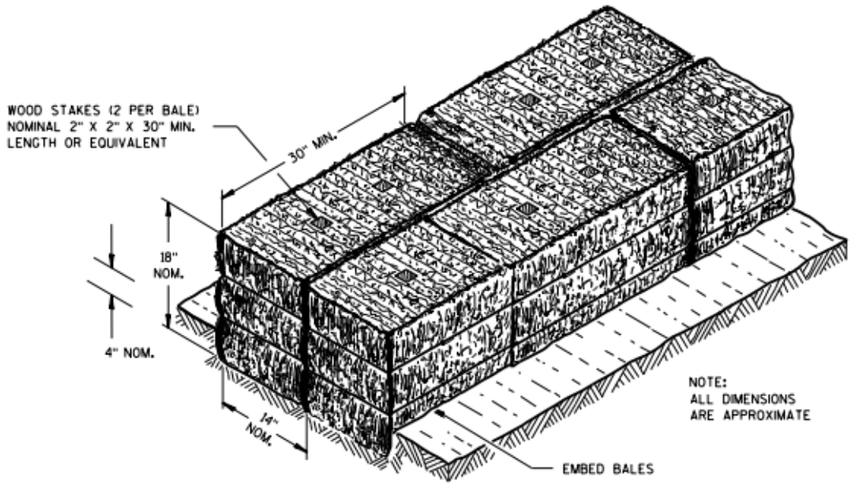

SECTION A-A

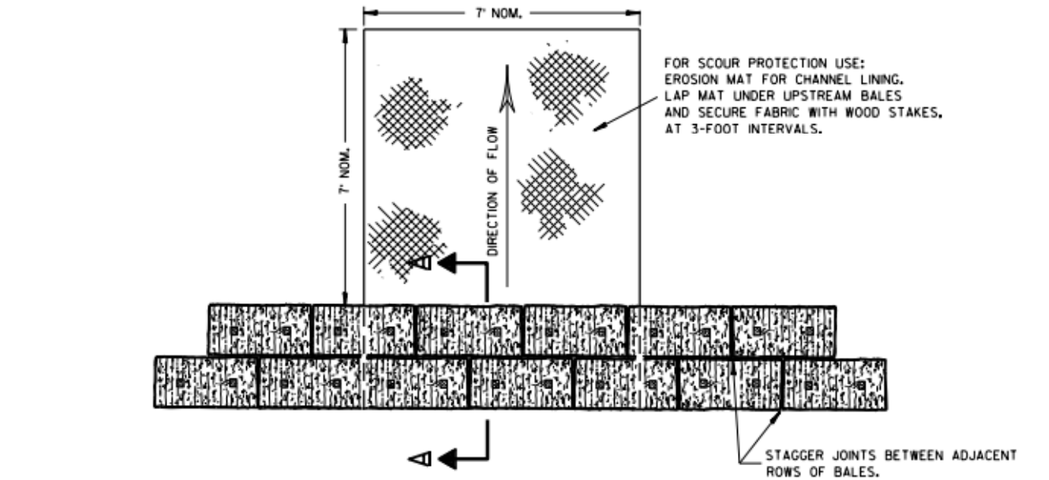

PLAN VIEW

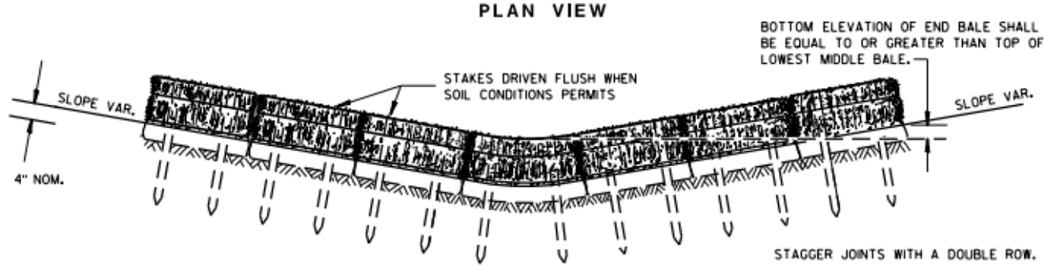

FRONT ELEVATION

TEMPORARY DITCH CHECK USING EROSION BALES ①

GENERAL NOTES

DETAILS OF CONSTRUCTION, MATERIALS AND WORKMANSHIP NOT SHOWN ON THIS DRAWING SHALL CONFORM TO THE PERTINENT REQUIREMENTS OF THE STANDARD SPECIFICATIONS AND THE APPLICABLE SPECIAL PROVISIONS.

① TEMPORARY DITCH CHECKS EITHER EROSION BALES OR MANUFACTURED SHALL BE PAID FOR UNDER THE BID ITEM OF TEMPORARY DITCH CHECK. THE DEPARTMENT WILL NOT PAY FOR TEMPORARY DITCH CHECKS CONSTRUCTED OF A SINGLE ROW OF EROSION BALES.

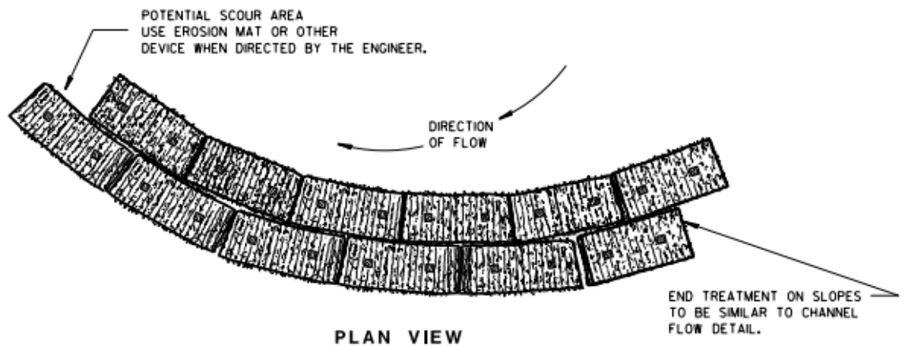

PLAN VIEW

WHEN ALTERING THE DIRECTION OF FLOW

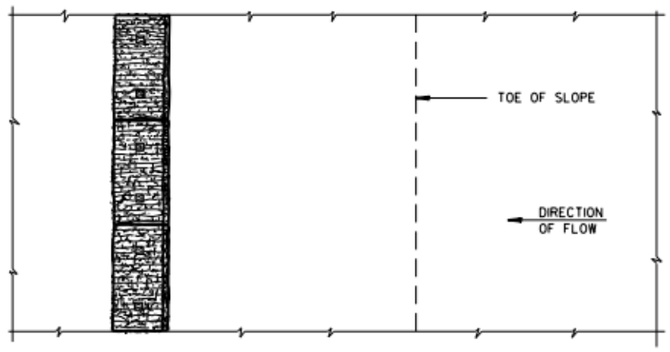

PLAN VIEW

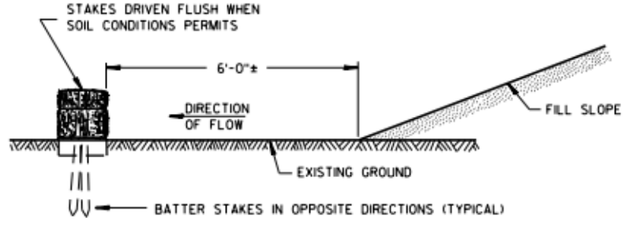

FRONT ELEVATION

WHEN EXISTING GROUND SLOPES AWAY FROM FILL SLOPE

EROSION BALES FOR SHEET FLOW

TYPICAL INSTALLATIONS OF EROSION BALES / TEMPORARY DITCH CHECKS

2

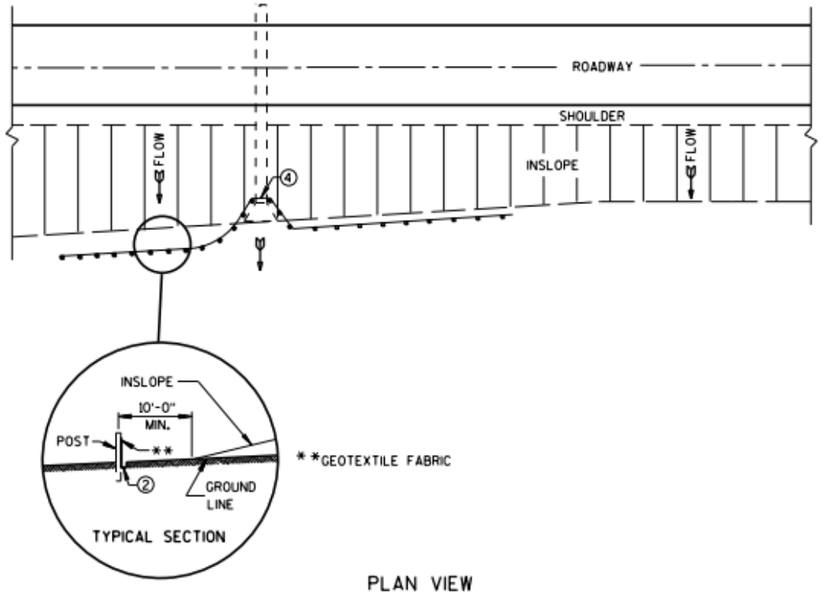

PLAN VIEW

TYPICAL APPLICATION OF SILT FENCE

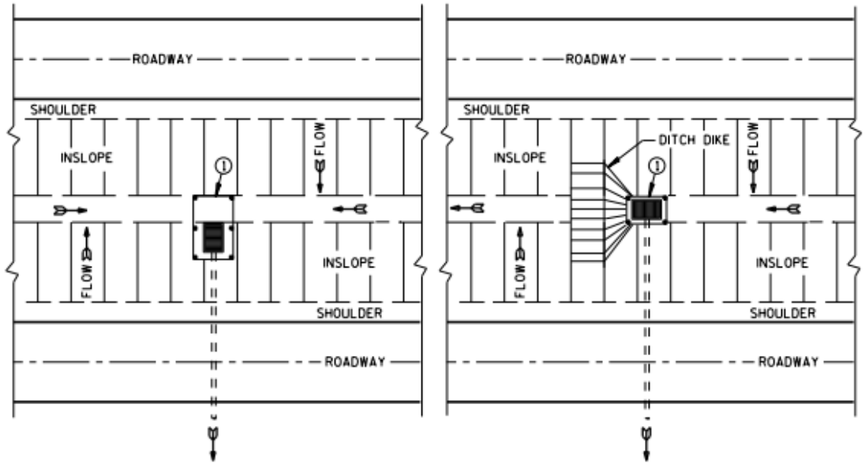

PLAN VIEW

SILT FENCE AT MEDIAN SURFACE DRAINS

GENERAL NOTES

DETAILS OF CONSTRUCTION NOT SHOWN ON THIS DRAWING SHALL CONFORM TO THE PERTINENT REQUIREMENTS OF THE STANDARD SPECIFICATIONS AND APPLICABLE SPECIAL PROVISIONS.

① HORIZONTAL BRACE REQUIRED WITH 2" X 4" WOODEN FRAME OR EQUIVALENT AT TOP OF POSTS.

② FOR MANUAL INSTALLATIONS THE TRENCH SHALL BE A MINIMUM OF 4" WIDE & 6" DEEP TO BURY AND ANCHOR THE GEOTEXTILE FABRIC. FOLD MATERIAL TO FIT TRENCH AND BACKFILL & COMPACT TRENCH WITH EXCAVATED SOIL.

③ WOOD POSTS SHALL BE A MINIMUM SIZE OF 1⅛" X 1⅛" OF OAK OR HICKORY.

④ SILT FENCE TO EXTEND ACROSS THE TOP OF THE PIPE.

⑤ CONSTRUCT SILT FENCE FROM A CONTINUOUS ROLL IF POSSIBLE BY CUTTING LENGTHS TO AVOID JOINTS. IF A JOINT IS NECESSARY USE ONE OF THE FOLLOWING TWO METHODS; A) OVERLAP THE END POSTS AND TWIST, OR ROTATE, AT LEAST 180 DEGREES. B) HOOK THE END OF EACH SILT FENCE LENGTH.

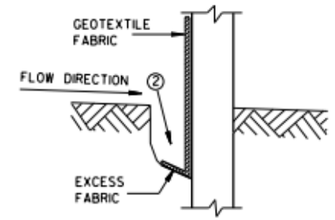

TRENCH DETAIL

SILT FENCE

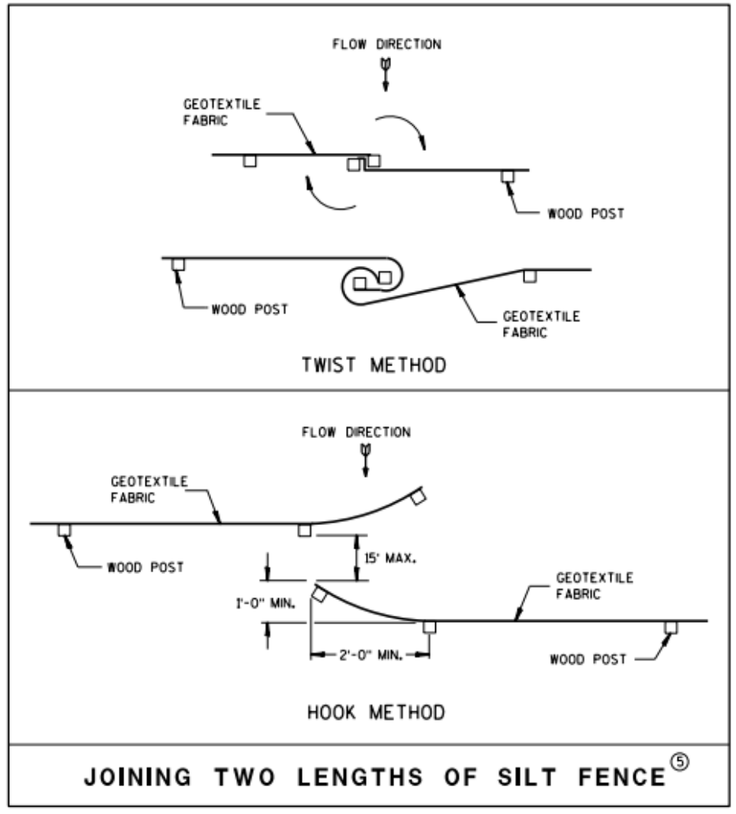

JOINING TWO LENGTHS OF SILT FENCE ⑤

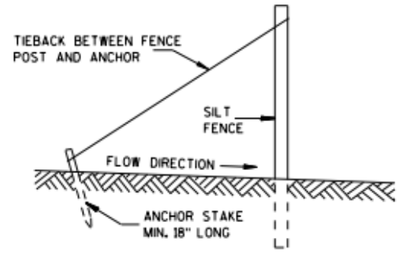

SILT FENCE TIE BACK

(WHEN REQUIRED BY THE ENGINEER)

SILT FENCE

PROJECT NO: RD16-003	HWY: CTH S	COUNTY: KENOSHA	CONSTRUCTION DETAILS	SHEET: 42	E

FILE NAME : _____ PLOT DATE : _____ PLOT BY : _____ PLOT NAME : _____ PLOT SCALE : 1:1

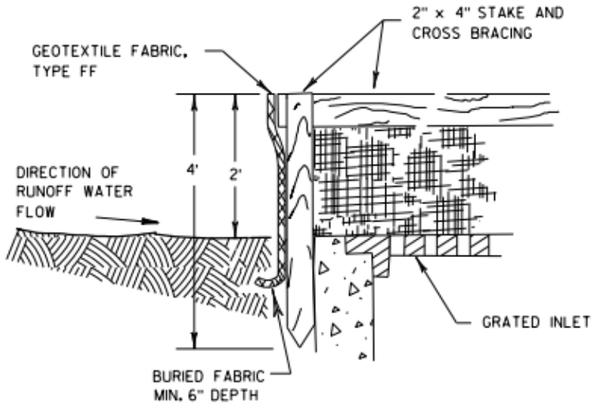

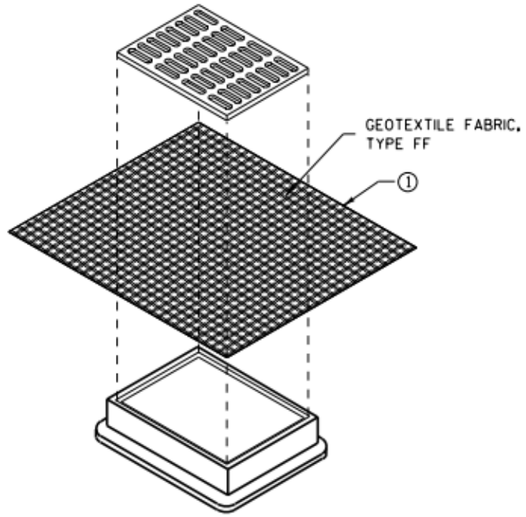

INLET PROTECTION, TYPE B (WITHOUT CURB BOX)

(CAN BE INSTALLED IN ANY INLET WITHOUT A CURB BOX)

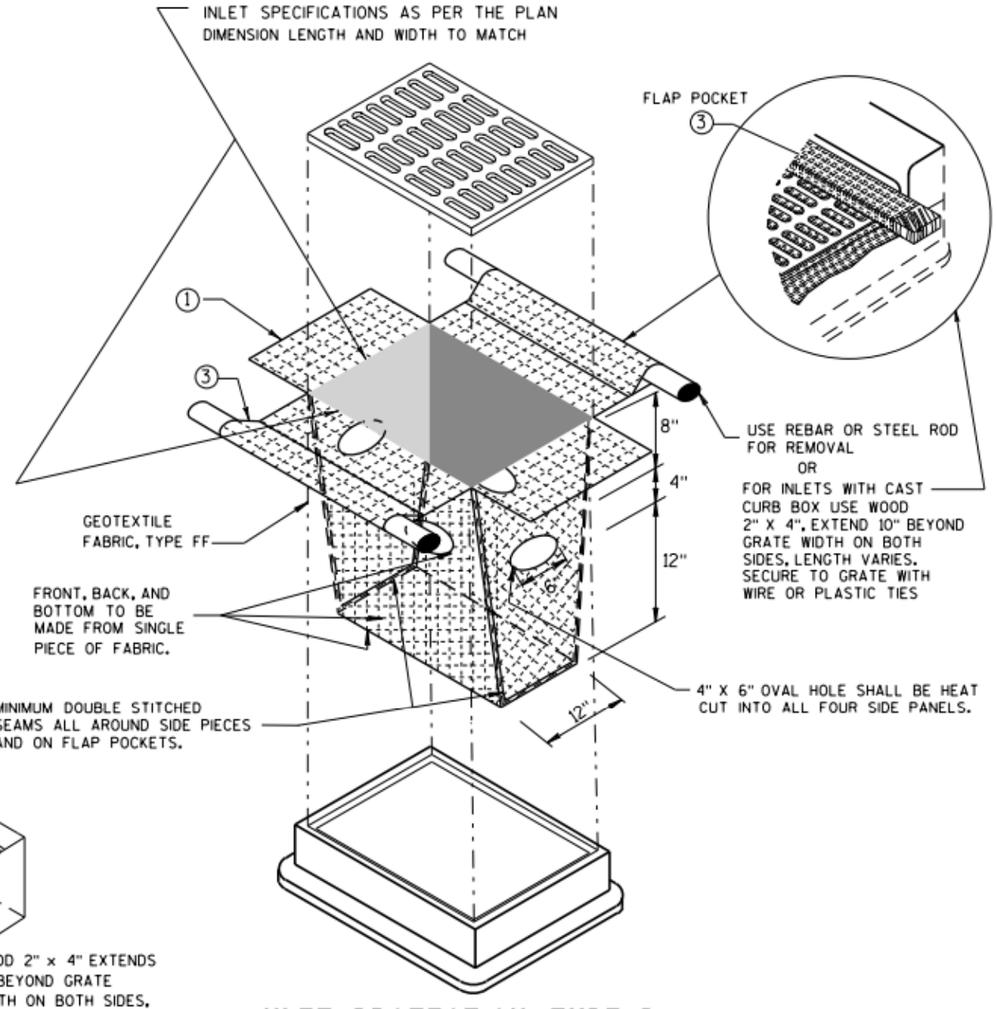

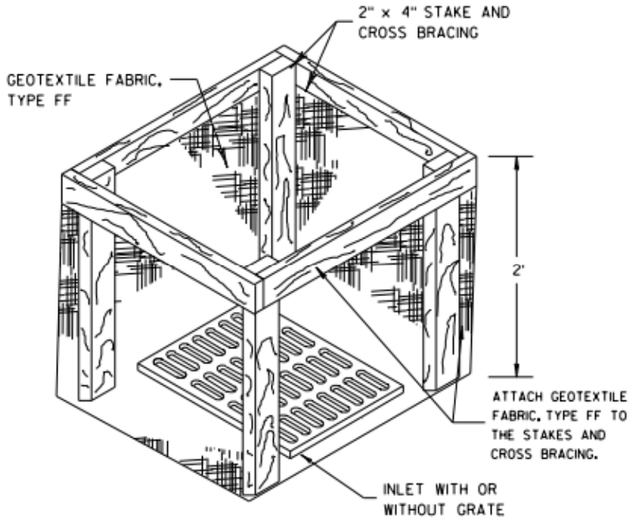

INLET PROTECTION, TYPE A

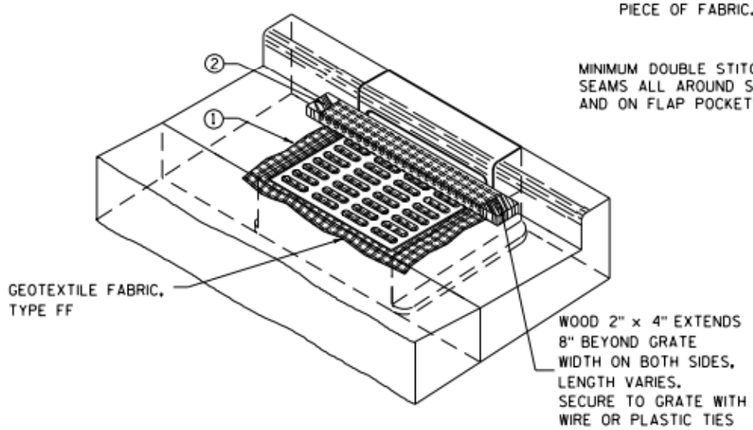

INLET PROTECTION, TYPE C (WITH CURB BOX)

INLET PROTECTION, TYPE D

(CAN BE INSTALLED IN ANY INLET TYPE WITH OR WITHOUT A CURB BOX AS PER NOTE ②)

GENERAL NOTES

INLET PROTECTION DEVICES SHALL BE MAINTAINED OR REPLACED AT THE DIRECTION OF THE ENGINEER.

MANUFACTURED ALTERNATIVES APPROVED AND LISTED ON THE DEPARTMENT'S EROSION CONTROL PRODUCT ACCEPTABILITY LIST MAY BE SUBSTITUTED.

WHEN REMOVING OR MAINTAINING INLET PROTECTION, CARE SHALL BE TAKEN SO THAT THE SEDIMENT TRAPPED ON THE GEOTEXTILE FABRIC DOES NOT FALL INTO THE INLET. ANY MATERIAL FALLING INTO THE INLET SHALL BE REMOVED IMMEDIATELY.

① FINISHED SIZE, INCLUDING FLAP POCKETS WHERE REQUIRED, SHALL EXTEND A MINIMUM OF 10" AROUND THE PERIMETER TO FACILITATE MAINTENANCE OR REMOVAL.

② FOR INLET PROTECTION, TYPE C (WITH CURB BOX), AN ADDITIONAL 18" OF FABRIC IS WRAPPED AROUND THE WOOD AND SECURED WITH STAPLES. THE WOOD SHALL NOT BLOCK THE ENTIRE HEIGHT OF THE CURB BOX OPENING.

③ FLAP POCKETS SHALL BE LARGE ENOUGH TO ACCEPT WOOD 2X4.

INSTALLATION NOTES

TYPE B & C

TRIM EXCESS FABRIC IN THE FLOW LINE TO WITHIN 3" OF THE GRATE.

THE CONTRACTOR SHALL DEMONSTRATE A METHOD OF MAINTENANCE, USING A SEWN FLAP, HAND HOLDS OR OTHER METHOD TO PREVENT ACCUMULATED SEDIMENT FROM ENTERING THE INLET.

TYPE D

DO NOT INSTALL INLET PROTECTION TYPE D IN INLETS SHALLOWER THAN 30", MEASURED FROM THE BOTTOM OF THE INLET TO THE TOP OF THE GRATE.

TRIM EXCESS FABRIC IN THE FLOW LINE TO WITHIN 3" OF THE GRATE.

THE INSTALLED BAG SHALL HAVE A MINIMUM SIDE CLEARANCE, BETWEEN THE INLET WALLS AND THE BAG, MEASURED AT THE BOTTOM OF THE OVERFLOW HOLES, OF 3". WHERE NECESSARY THE CONTRACTOR SHALL CINCH THE BAG, USING PLASTIC ZIP TIES, TO ACHIEVE THE 3" CLEARANCE. THE TIES SHALL BE PLACED AT A MAXIMUM OF 4" FROM THE BOTTOM OF THE BAG.

INLET PROTECTION TYPE A, B, C, AND D

PROJECT NO: RD16-003	HWY: CTH S	COUNTY: KENOSHA	CONSTRUCTION DETAILS	SHEET: 43	E

FILE NAME : _____ PLOT DATE : _____ PLOT BY : _____ PLOT NAME : _____ PLOT SCALE : 1:1

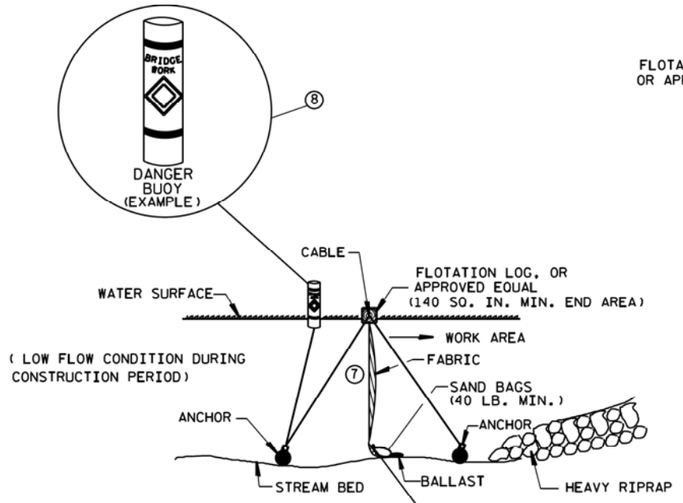

SECTION B-B

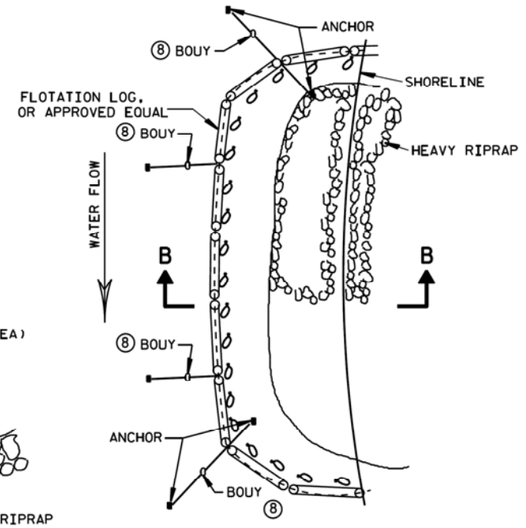

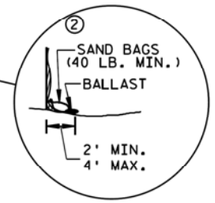

TURBIDITY BARRIER FLOAT ALTERNATIVE
CAUTION - SEE NOTE 6

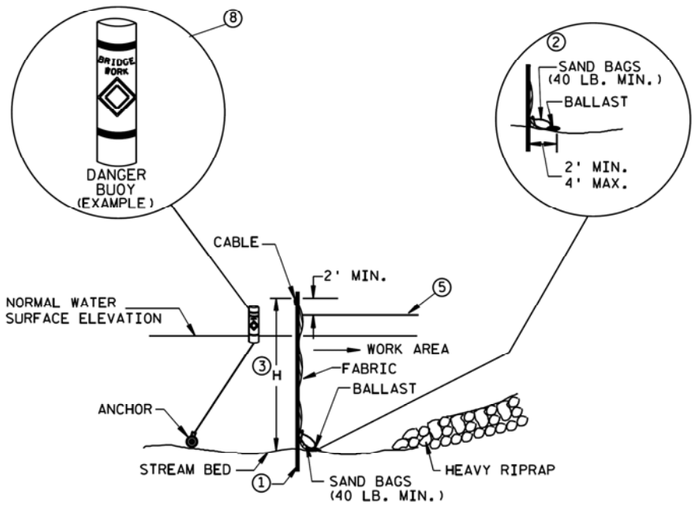

SECTION A-A

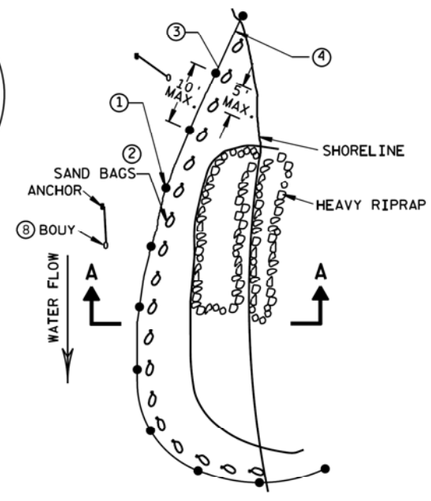

PLAN VIEW

TURBIDITY BARRIER STANDARD POST INSTALLATION

TURBIDITY BARRIER PLACEMENT DETAILS

GENERAL NOTES

DETAILS OF CONSTRUCTION, MATERIALS AND WORKMANSHIP NOT SHOWN ON THIS DRAWING SHALL CONFORM TO THE PERTINENT REQUIREMENTS OF THE STANDARD SPECIFICATIONS AND THE APPLICABLE SPECIAL PROVISIONS.

TURBIDITY BARRIER MAY BE REMOVED AT THE ENGINEERS DISCRETION, WHEN PERMANENT EROSION CONTROL MEASURES HAVE BEEN ESTABLISHED.

① DRIVEN STEEL POSTS, PIPES, OR CHANNELS. LENGTH SHALL BE SUFFICIENT TO SECURELY SUPPORT BARRIER AT HIGH WATER ELEVATIONS.

② SANDBAGS TO BE USED AS ADDITIONAL BALLAST WHEN ORDERED BY THE ENGINEER TO MEET ADVERSE FIELD CONDITIONS. SPACE AS APPROPRIATE FOR SITE CONDITIONS.

③ WHEN BARRIER HEIGHT, H, EXCEEDS 8 FT., POST SPACING MAY NEED TO BE DECREASED.

④ IN WATERWAYS SUBJECT TO FLUCTUATING WATER ELEVATIONS, PROVISIONS SHOULD BE MADE TO ALLOW THE WATER TO EQUALIZE ON EACH SIDE OF THE BARRIER. THIS MAY BE ACCOMPLISHED BY LEAVING A PORTION OF THE BARRIER OPEN ON THE UPSTREAM END.

⑤ ESTIMATED HIGH WATER ELEVATION DURING CONSTRUCTION PERIOD. MIMIMUM BARRIER HEIGHT SHALL BE 2'GREATER THAN EITHER THE 02 ELEVATION OR THE ESTIMATED HIGH WATER ELEVATION DURING CONSTRUCTION, WICHEVER IS GREATER.

⑥ FLOAT ALTERNATIVE WILL ONLY BE ALLOWED WITH WRITTEN APPROVAL OF THE ENGINEER, AND IS MEANT FOR LOCATIONS WHERE BED ROCK PREVENTS THE INSTALLATION OF POSTS.

⑦ ALLOW SUFFICIENT SLACK VERTICALLY AND HORIZONTALLY SO THAT SEDIMENT BUILD UP WILL NOT SEPARATE OR LOWER THE TURBIDITY BARRIER.

⑧ USE AS DIRECTED BY COAST GUARD OR DNR PERMIT WHEN WORKING IN NAVIGABLE WATERWAYS.

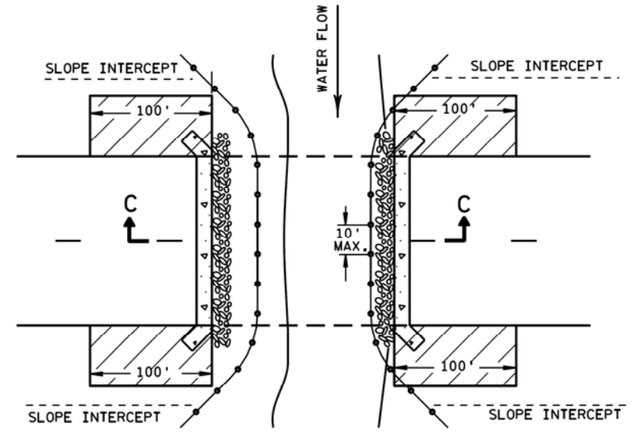

PLAN VIEW

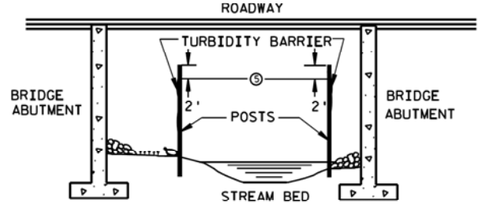

SECTION C-C

TURBIDITY BARRIER

TURBIDITY BARRIER DETAIL SHOWING TYPICAL PLACEMENT AT STRUCTURES

2

GENERAL NOTES

DETAILS OF CONSTRUCTION, MATERIALS AND WORKMANSHIP NOT SHOWN ON THIS DRAWING SHALL CONFORM TO THE PERTINENT REQUIREMENTS OF THE STANDARD SPECIFICATIONS AND THE APPLICABLE SPECIAL PROVISIONS.

TRACKING PAD SHALL BE INSPECTED DAILY. DEFICIENT AREAS SHALL BE REPAIRED OR REPLACED IMMEDIATELY.

TRACKING PAD TO BE REMOVED AFTER CONSTRUCTION IS COMPLETED.

TRACKING PAD SHALL BE THE FULL WIDTH OF THE EGRESS POINT.

SURFACE WATER MUST BE PREVENTED FROM PASSING THROUGH THE TRACKING PAD. FLOWS SHALL BE DIVERTED AWAY, AROUND OR CONVEYED UNDER THE TRACKING PAD.

CULVERT PIPE OR OTHER BMP USED TO DIVERT WATER AWAY, AROUND OR UNDER THE TRACKING PAD SHALL BE DESIGNED TO CONVEY THE 2 YEAR - 24 HOUR EVENT.

THE COST OF ADDITIONAL BMP TO DIVERT WATER ARE INCIDENTAL TO THE TRACKING PAD BID ITEM.

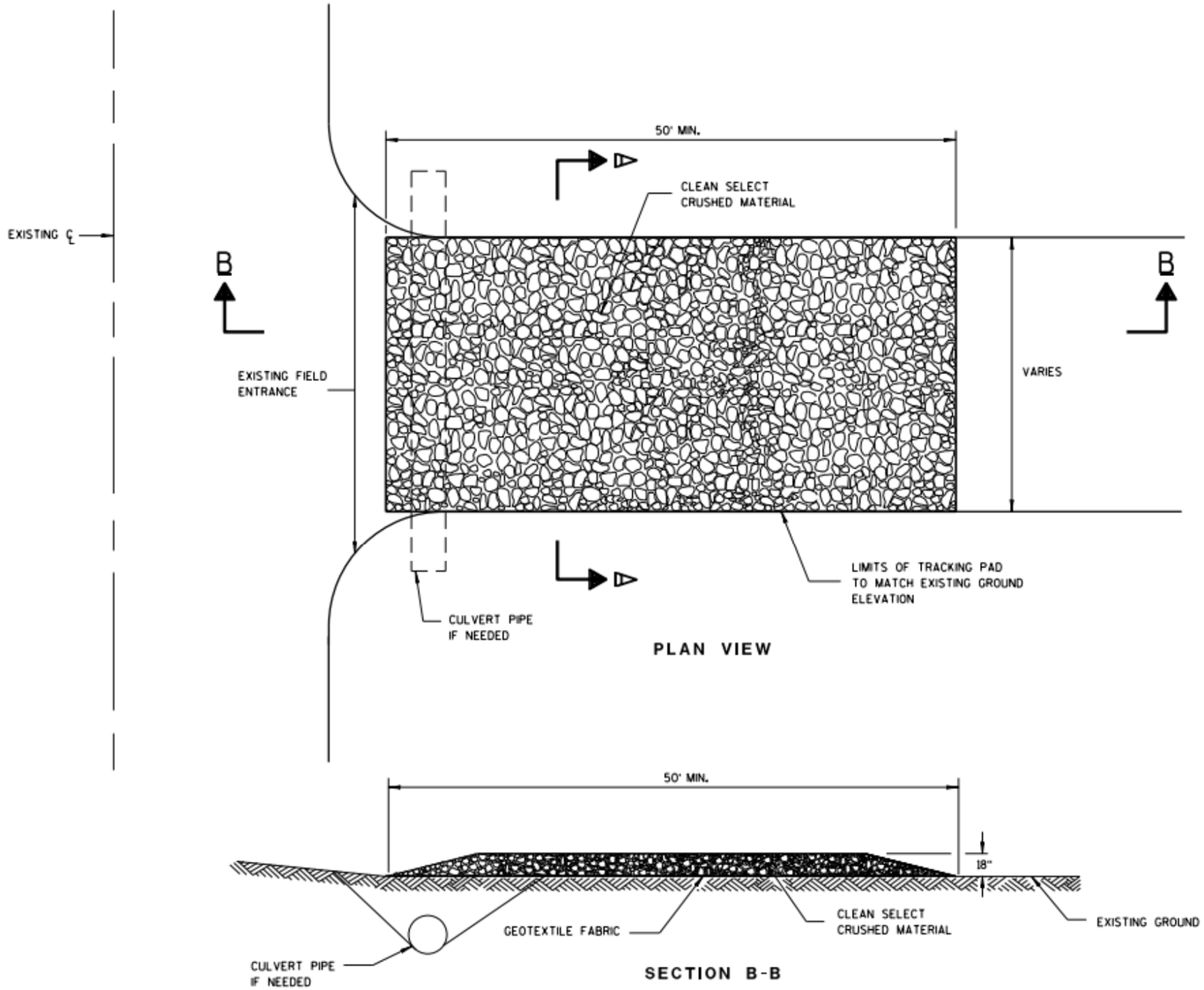

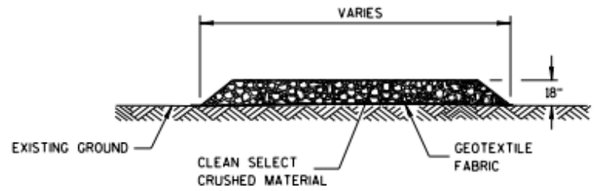

SECTION A-A

TRACKING PAD

TRACKING PAD

PROJECT NO: RD16-003	HWY: CTH S	COUNTY: KENOSHA	CONSTRUCTION DETAILS	SHEET: 45	E

FILE NAME : _____ PLOT DATE : _____ PLOT BY : _____ PLOT NAME : _____ PLOT SCALE : 1:1

2

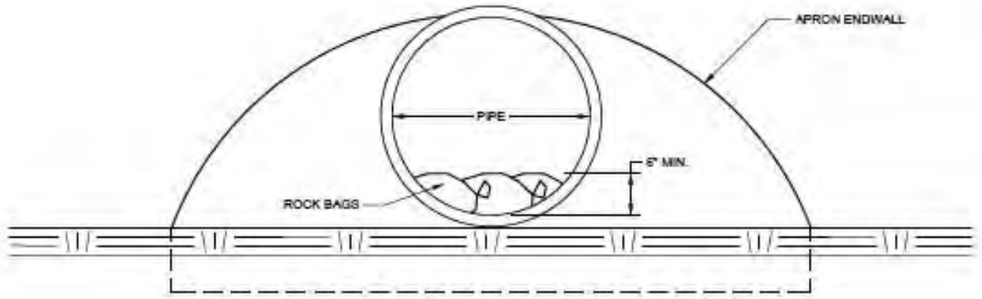

END VIEW

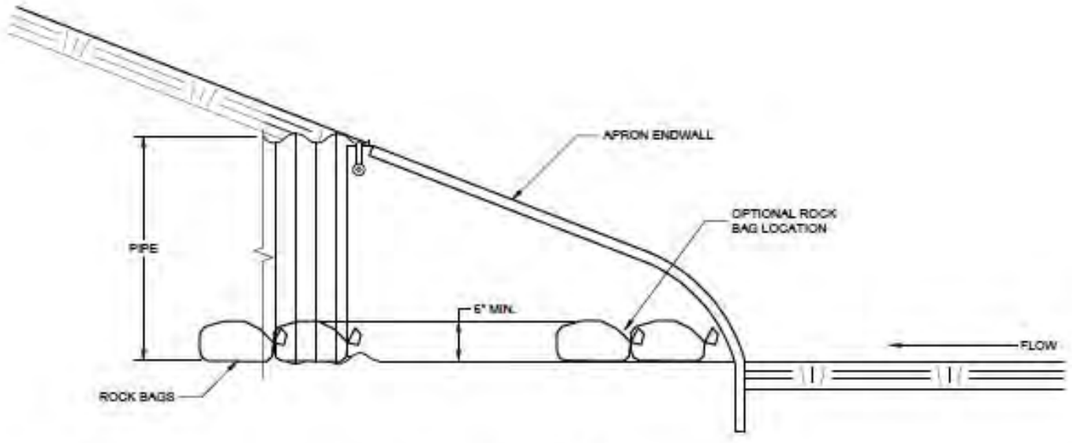

SIDE VIEW

CULVERT PIPE CHECK

(INSTALL ON INLET END ONLY)

CULVERT PIPE CHECK

METAL APRON ENDWALLS

PIPE DIA. (IN.)	MIN. THICK. (Inches) STEEL	MIN. THICK. (Inches) ALUM.	DIMENSIONS (Inches) A (±1")	B (MAX.)	H (±1")	L (±1 1/2")	L1 ①	L2 ①	W (±2")	APPROX. SLOPE	BODY
12	.064	.060	6	6	6	21	12	17 1/2	24	2 1/2 to 1	1 Pc.
15	.064	.060	7	8	6	26	14	21 3/4	30	2 1/2 to 1	1 Pc.
18	.064	.060	8	10	6	31	15	28 1/4	36	2 1/2 to 1	1 Pc.
21	.064	.060	9	12	6	36	18	29 5/8	42	2 1/2 to 1	1 Pc.
24	.064	.075	10	13	6	41	18	37 1/4	48	2 1/2 to 1	1 Pc.
30	.079	.075	12	16	8	51	18	52 1/4	60	2 1/2 to 1	1 Pc.
36	.079	.105	14	19	9	60	24	59 3/4	72	2 1/2 to 1	2 Pc.
42	.109	.105	16	22	11	69	24	75 5/8	84	2 1/2 to 1	2 Pc.
48	.109	.105	18	27	12	76	24	81	90	2 1/4 to 1	3 Pc.
54	.109	.105	18	30	12	84	30	85 1/2	102	2 1/4 to 1	3 Pc.
60	.109×	.105×	18	33	12	87	—	—	114	2 to 1	3 Pc.
66	.109×	.105×	18	36	12	87	—	—	120	2 to 1	3 Pc.
72	.109×	.105×	18	39	12	87	—	—	126	2 to 1	3 Pc.
78	.109×	.105×	18	42	12	87	—	—	132	1 1/2 to 1	3 Pc.
84	.109×	.105×	18	45	12	87	—	—	138	1 1/2 to 1	3 Pc.
90	.109×	.105×	18	37	12	87	—	—	144	1 1/2 to 1	3 Pc.
96	.109×	.105×	18	35	12	87	—	—	150	1 1/2 to 1	3 Pc.

× EXCEPT CENTER PANEL SEE GENERAL NOTES

REINFORCED CONCRETE APRON ENDWALLS

PIPE DIA. (IN.)	DIMENSIONS (Inches) T	A	B	C	D	E	G	APPROX. SLOPE
12	2	4	24	48 3/8	72 1/8	24	2	3 to 1
15	2 1/4	6	27	46	73	30	2 1/4	3 to 1
18	2 1/2	9	27	46	73	36	2 1/2	3 to 1
21	2 3/4	9	36	37 1/2	73 1/2	42	2 3/4	3 to 1
24	3	9 1/2	43 1/2	30	73 1/2	48	3	3 to 1
27	3 1/4	10 1/2	49 1/2	24	73 1/2	54	3 1/4	3 to 1
30	3 1/2	12	54	19 3/4	73 1/2	60	3 1/2	3 to 1
36	4	15	63	34 3/4	97 3/4	72	4	3 to 1
42	4 1/2	21	63	35	98	78	4 1/2	3 to 1
48	5	24	72	26	98	84	5	3 to 1
54	5 1/2	27	65	* 33 1/4-35 ** 98 1/4- 100		90	5 1/2	2 3/8 to 1
60	6	* 30-35 **	60	39	99	96	5	2 to 1
66	6 1/2	* 24-30 **	* 72-78 **	* 21-27 **	99	102	5 1/2	2 to 1
72	7	* 24-36 **	78	21	99	108	6	2 to 1
78	7 1/2	* 24-36 **	78	21	99	114	6 1/2	2 to 1
84	8	36	90 1/2	21	111 1/2	120	6 1/2	1 1/2 to 1
90	8 1/2	41	87 1/2	24	111 1/2	132	6 1/2	1 1/2 to 1

*MINIMUM
**MAXIMUM

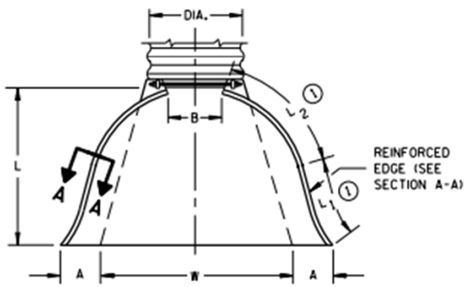

PLAN VIEW

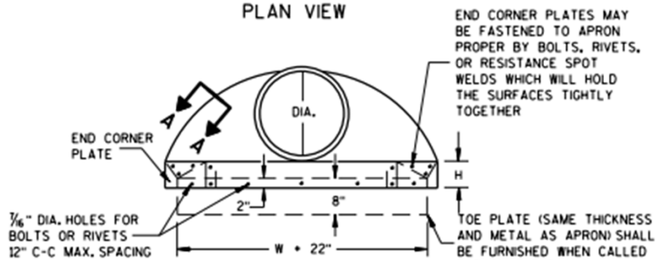

END VIEW

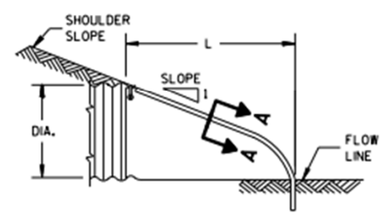

SIDE ELEVATION

METAL ENDWALLS

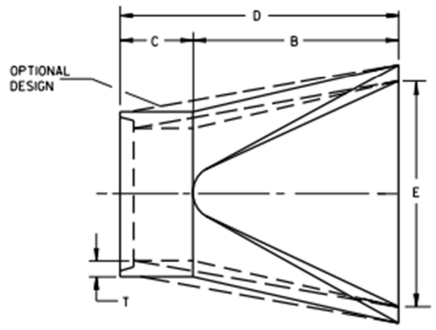

PLAN

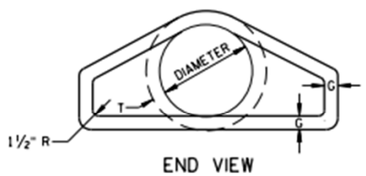

END VIEW

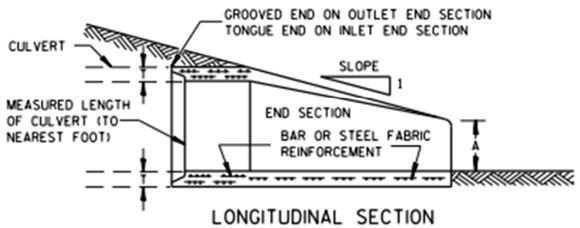

LONGITUDINAL SECTION

CONCRETE ENDWALLS

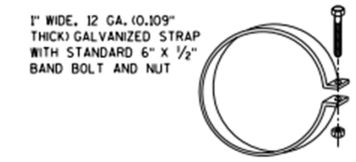

ALTERNATE FOR TYPE 1 CONNECTION

END SECTION CONNECTOR STRAP

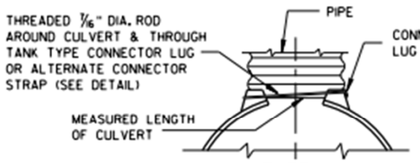

TYPE 1
FOR 12" THRU 24" CORR. PIPE

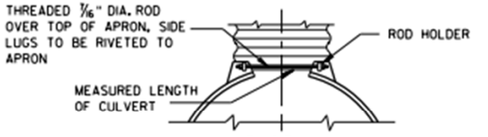

TYPE 2
FOR 30" THRU 96" CORR. PIPE

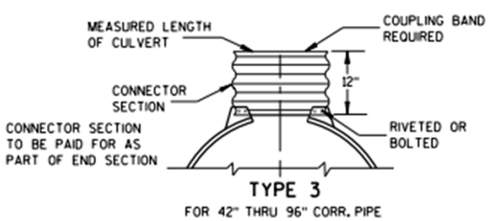

TYPE 3
FOR 42" THRU 96" CORR. PIPE

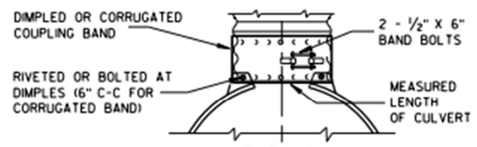

TYPE 5
ALTERNATE FOR:
ALL SIZES CORRUGATED CIRCULAR PIPE

NOTE: DIMPLED BAND FITS OVER OUTSIDE OF ENDWALL, AND CORRUGATED BAND FITS INSIDE ENDWALL. DIMPLED BAND MAY BE USED WITH HELICALLY CORRUGATED PIPE.

FOR CIRCUMFERENTIALLY CORRUGATED PIPE USE ENDWALL CONNECTION DETAILS 1, 2, 3 OR 5 AS APPLICABLE.

FOR HELICALLY CORRUGATED PIPE USE ENDWALL CONNECTION DETAILS 1, 2 OR 5.

FOR HELICALLY CORRUGATED PIPES WITH TWO CIRCUMFERENTIAL CORRUGATIONS AT EACH END USE ENDWALL CONNECTION DETAILS 1, 2 OR 3.

CONNECTION DETAILS

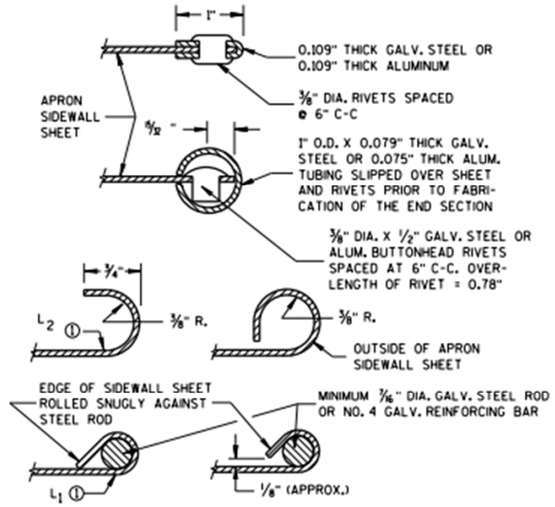

SECTION A-A

GENERAL NOTES

DETAILS OF CONSTRUCTION, MATERIALS AND WORKMANSHIP NOT SHOWN ON THIS DRAWING SHALL CONFORM TO THE PERTINENT REQUIREMENTS OF THE STANDARD SPECIFICATIONS AND THE APPLICABLE SPECIAL PROVISIONS.

CONCRETE CULVERT ENDWALLS MAY NOT BE USED WITH GALVANIZED STEEL OR ALUMINUM CULVERT PIPE OR VISE VERSA. GALVANIZED STEEL OR ALUMINUM ENDWALLS SHALL NORMALLY BE INSTALLED ON CULVERT PIPE OF THE SAME METAL.

ALL THREE PIECE STEEL APRON ENDWALLS FOR 60" DIAMETER PIPE AND LARGER SHALL HAVE 0.109" SIDES AND 0.138" CENTER PANELS. ALL THREE PIECE ALUMINUM APRON ENDWALLS FOR 60" DIAMETER PIPE AND LARGER SHALL HAVE 0.105" SIDES AND 0.134" CENTER PANELS. THE WIDTH OF CENTER PANELS SHALL BE GREATER THAN 20 PERCENT OF THE PIPE PERIMETER.

LAP SEAMS SHALL BE TIGHTLY JOINED BY GALVANIZED RIVETS OR BOLTS FOR STEEL UNITS AND ALUMINUM RIVETS AND BOLTS FOR ALUMINUM UNITS. FOR THE 60" THROUGH 96" DIAMETER APRON ENDWALL SIZES, THE REINFORCED EDGES AND CENTER PANEL SEAMS SHALL BE FURTHER REINFORCED WITH GALVANIZED STEEL OR ALUMINUM STIFFENER ANGLES. THE ANGLES SHALL BE ATTACHED BY GALVANIZED NUTS AND BOLTS FOR STEEL UNITS AND ALUMINUM NUTS AND BOLTS FOR ALUMINUM UNITS.

WHERE TWO OR MORE PIPES WITH APRON ENDWALLS ARE LAID ADJACENT TO EACH OTHER, THEY SHALL BE SEPARATED BY A DISTANCE SUFFICIENT TO PROVIDE A MINIMUM CLEARANCE OF 6 INCHES BETWEEN APRON ENDWALLS.

① FOR PIPE SIZES UP TO 60" DIAMETER, A 180° ROLLED EDGE MAY BE USED INSTEAD OF STEEL ROD REINFORCEMENT. SEE SECTION A-A.

APRON ENDWALLS FOR CULVERT PIPE

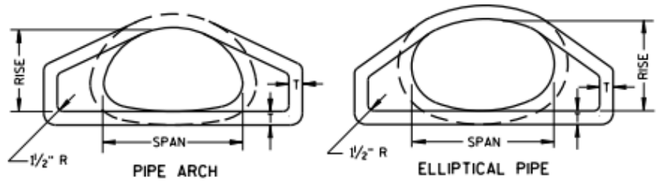

END VIEW

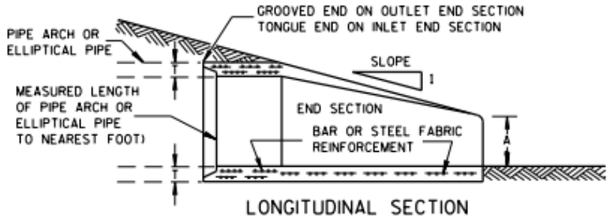

LONGITUDINAL SECTION

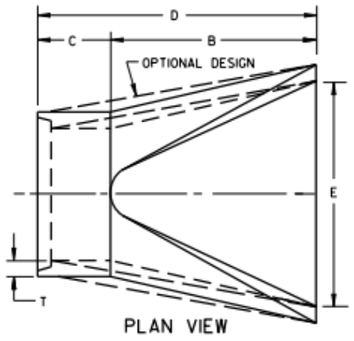

PLAN VIEW

CONCRETE ENDWALLS

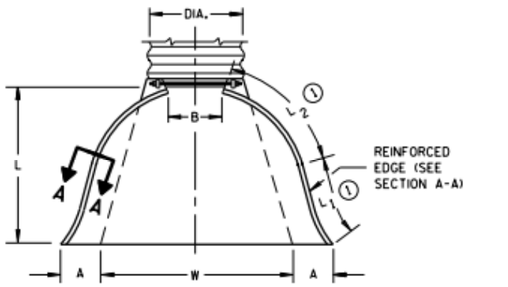

PLAN VIEW

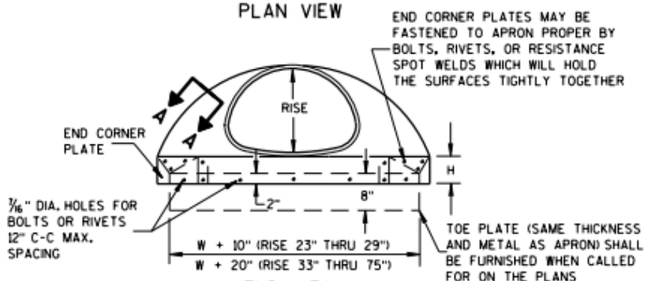

END VIEW

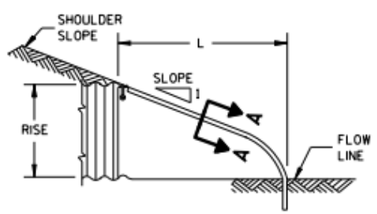

SIDE ELEVATION

METAL ENDWALLS

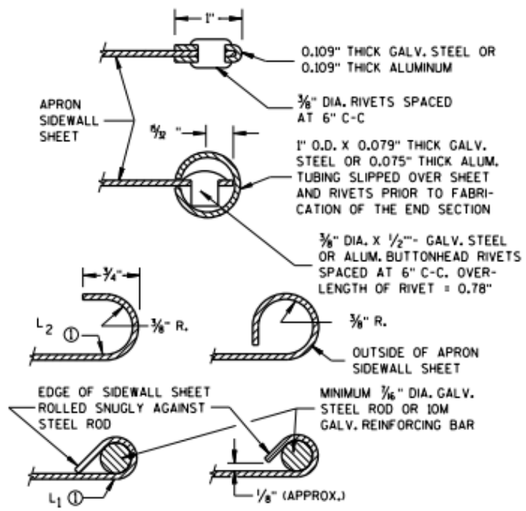

SECTION A-A

2- 2/3" X 1/2" CORRUGATIONS

EQUIV. DIA. (Inches)	(Inches) SPAN	(Inches) RISE	MIN. THICK. (Inches) STEEL	MIN. THICK. (Inches) ALUM.	DIMENSIONS (Inches) A (±1")	B (MAX.)	H (±1")	L (±1 1/2")	L1 ①	L2 ①	W (±2")	APPROX. SLOPE	BODY
15	17	13	.064	.060	7	9	6	19	14	16	30	2½ to 1	1 Pc.
18	21	15	.064	.060	7	10	6	23	14	19⅜	36	2½ to 1	1 Pc.
21	24	18	.064	.060	8	12	6	28	18	21¾	42	2½ to 1	1 Pc.
24	28	20	.064	.060	9	14	6	32	18	27½	48	2½ to 1	1 Pc.
30	35	24	.079	.075	10	16	6	39	18	37⅝	60	2½ to 1	1 Pc.
36	42	29	.079	.075	12	18	8	46	24	45⅝	75	2½ to 1	1 Pc.
42	49	33	.109	.105	13	21	9	53	24	54¾	85	2½ to 1	2 Pc.
48	57	38	.109	.105	18	26	12	63	24	68	90	2½ to 1	3 Pc.
54	64	43	.109	.105	18	30	12	70	24	72¾	102	2¼ to 1	3 Pc.
60	71	47	.109*	.105*	18	33	12	77	30	82¼	114	2¼ to 1	3 Pc.
66	77	52	.109*	.105*	18	36	12	77	—	—	126	2 to 1	3 Pc.
72	83	57	.109*	.105*	18	39	12	77	—	—	138	2 to 1	3 Pc.

3" X 1" CORRUGATIONS

EQUIV. DIA. (Inches)	(Inches) SPAN	(Inches) RISE	MIN. THICK. (Inches) STEEL	MIN. THICK. (Inches) ALUM.	DIMENSIONS (Inches) A (±1")	B (MAX.)	H (±1")	L (±1 1/2")	L1 ①	L2 ①	W (±2")	APPROX. SLOPE	BODY
48	53	41	.109	.105	18	26	12	63	24	72¾	90	2½ to 1	2 Pc.
54	60	46	.109	.105	18	30	12	70	30	82¼	102	2 to 1	2 Pc.
60	66	51	.109*	.105*	18	33	12	77	—	—	114	1½ to 1	3 Pc.
66	73	55	.109*	.105*	18	36	12	77	—	—	126	1½ to 1	3 Pc.
72	81	59	.109*	.105*	18	39	12	77	—	—	138	2 to 1	3 Pc.
78	87	63	.109*	.105*	22	38	12	77	—	—	148	1½ to 1	3 Pc.
84	95	67	.109*	.105*	22	34	12	77	—	—	162	1½ to 1	3 Pc.
90	103	71	.109*	.105*	22	38	12	77	—	—	174	1½ to 1	3 Pc.
96	112	75	.109*	.105*	24	40	12	77	—	—	174	1½ to 1	3 Pc.

NOTE: ALL SPLICES TO BE LAP RIVETED OR BOLTED.

*EXCEPT CENTER PANEL SEE GENERAL NOTES

REINFORCED CONCRETE PIPE ARCH

EQUIV. DIA. (Inches)	DIMENSIONS (Inches) **SPAN	**RISE	T	A	B	C	D	E	APPROX. SLOPE
24	29	18	3	8½	39	33	72	48	3 to 1
30	36	22	3½	9½	50	46	96	60	3 to 1
36	44	27	4	11⅛	60	36	96	72	3 to 1
42	51	31	4½	15⅛	60	36	96	78	3 to 1
48	58	36	5	21	60	36	96	84	3 to 1
54	65	40	5½	25½	60	36	96	90	3 to 1
60	73	45	6	31	60	36	96	96	3 to 1
72	88	54	7	31	60	39	99	120	2 to 1
84	102	62	8	28½	83	19	102	144	2 to 1

REINFORCED CONCRETE ELLIPTICAL PIPE

EQUIV. DIA. (Inches)	DIMENSIONS (Inches) **SPAN	**RISE	T	A	B	C	D	E	APPROX. SLOPE
24	30	19	3¼	8½	39	33	72	48	3 to 1
30	38	24	3¾	9½	54	18	72	60	3 to 1
36	45	29	4½	11⅛	60	24	84	72	2½ to 1
42	53	34	5	15¾	60	36	96	78	2½ to 1
48	60	38	5½	21	60	36	96	84	2½ to 1
54	68	43	6	25½	60	36	96	90	2½ to 1
60	76	48	6½	30	60	36	96	96	2½ to 1

**NOMINAL SIZE

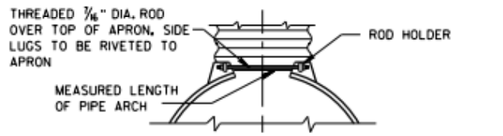

TYPE 2

FOR 17" X 13" THRU 112" X 75" PIPE ARCH

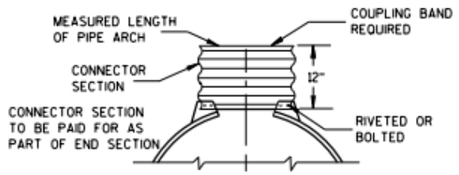

TYPE 3

FOR 64" X 43" THRU 112" X 75" PIPE ARCH

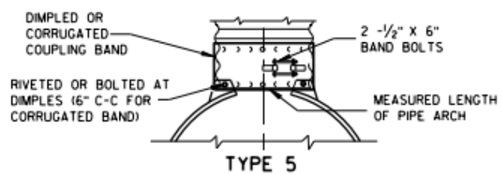

TYPE 5

ALTERNATE FOR:
ALL SIZES CORRUGATED PIPE ARCHES

NOTE: DIMPLED BAND FITS OVER OUTSIDE OF ENDWALL. AND CORRUGATED BAND FITS INSIDE ENDWALL.

CONNECTION DETAILS

GENERAL NOTES

DETAILS OF CONSTRUCTION, MATERIALS AND WORKMANSHIP NOT SHOWN ON THIS DRAWING SHALL CONFORM TO THE PERTINENT REQUIREMENTS OF THE STANDARD SPECIFICATIONS AND THE APPLICABLE SPECIAL PROVISIONS.

CONCRETE APRON ENDWALLS MAY NOT BE USED WITH GALVANIZED STEEL OR ALUMINUM CULVERT PIPE OR VISE VERSA. GALVANIZED STEEL OR ALUMINUM APRON ENDWALLS SHALL NORMALLY BE INSTALLED ON CULVERT PIPE OF THE SAME METAL.

ALL THREE PIECE STEEL APRON ENDWALLS FOR 66" X 51" PIPE ARCH AND LARGER SHALL HAVE 0.109" SIDES AND 0.138" CENTER PANELS. ALL THREE PIECE ALUMINUM APRON ENDWALLS FOR 66" X 51" PIPE ARCH AND LARGER SHALL HAVE 0.105" SIDES AND 0.134" CENTER PANELS. THE WIDTH OF CENTER PANELS SHALL BE GREATER THAN 20 PERCENT OF THE PIPE ARCH PERIMETER.

LAP SEAMS SHALL BE TIGHTLY JOINED BY GALVANIZED RIVETS OR BOLTS FOR STEEL UNITS AND ALUMINUM RIVETS AND BOLTS FOR ALUMINUM UNITS. FOR THE 77" X 52" THROUGH 112" X 75" APRON ENDWALL SIZES, THE REINFORCED EDGES AND CENTER PANEL SEAMS SHALL BE FURTHER REINFORCED WITH GALVANIZED STEEL OR ALUMINUM STIFFENER ANGLES. THE ANGLES SHALL BE ATTACHED BY GALVANIZED NUTS AND BOLTS FOR STEEL UNITS AND ALUMINUM NUTS AND BOLTS FOR ALUMINUM UNITS.

WHERE TWO OR MORE PIPES WITH APRON ENDWALLS ARE LAID ADJACENT TO EACH OTHER, THEY SHALL BE SEPARATED BY A DISTANCE SUFFICIENT TO PROVIDE A MINIMUM CLEARANCE OF 6 INCHES BETWEEN APRON ENDWALLS.

① FOR PIPE ARCH SIZES UP TO 73" X 55" A 180° ROLLED EDGE MAY BE USED INSTEAD OF STEEL ROD REINFORCEMENT. SEE SECTION A-A.

APRON ENDWALLS FOR PIPE ARCH AND ELLIPTICAL PIPE

PROJECT NO: RD16-003	HWY: CTH S	COUNTY: KENOSHA	CONSTRUCTION DETAILS	SHEET: 48	E

FILE NAME : _____ PLOT DATE : _____ PLOT BY : _____ PLOT NAME : _____ PLOT SCALE : 1:1

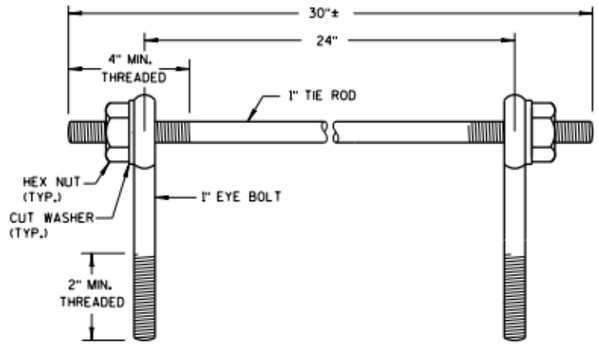

EYE BOLTS AND TIE ROD

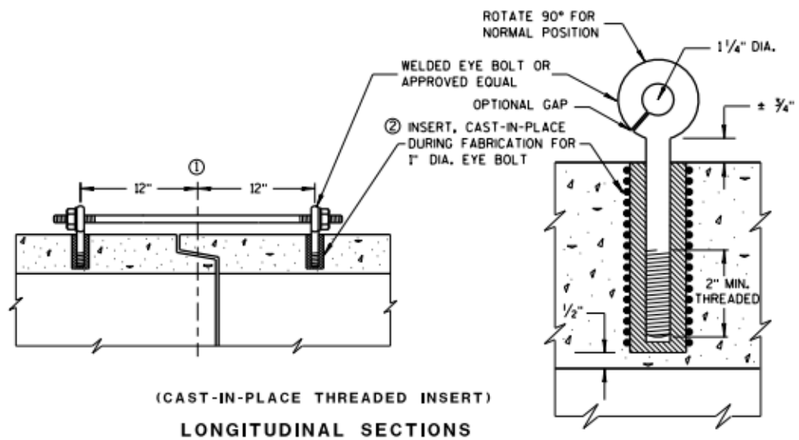

(CAST-IN-PLACE THREADED INSERT)

LONGITUDINAL SECTIONS

EYE BOLT AND TIE ROD ASSEMBLY (ALTERNATE NO. 1)

GENERAL NOTES

DETAILS OF CONSTRUCTION, MATERIALS, AND WORKMANSHIP NOT SHOWN ON THIS DRAWING SHALL CONFORM TO THE PERTINENT REQUIREMENTS OF THE STANDARD SPECIFICATIONS AND APPLICABLE SPECIAL PROVISIONS.

CONCRETE CULVERT AND STORM SEWER PIPE SHALL BE TIED TOGETHER IN THE MANNER ILLUSTRATED BY THIS DETAIL AT LOCATIONS DESIGNATED IN THE STANDARD SPECIFICATIONS AND THE PLAN. THE CONTRACTOR MAY USE EITHER ALTERNATE 1, 2 OR 3 FOR DRAINAGE STRUCTURES. ONLY ALTERNATE 1 AND 3 MAY BE USED FOR CATTLE PASSES, UNLESS OTHERWISE STATED IN THE CONTRACT. THE MATERIALS, FABRICATION AND WORK NECESSARY TO TIE THE PIPE BY THIS DETAIL WILL BE CONSIDERED INCIDENTAL TO THE PIPE AND APRON ENDWALLS IF REQUIRED.

DETAILED DRAWINGS FOR PROPOSED ALTERNATE DESIGNS FOR JOINT TIES SHALL BE SUBMITTED TO THE ENGINEER FOR APPROVAL.

JOINT TIES TO BE HOT-DIP GALVANIZED PER ASTM A 153.

① ℄ OF TONGUE AND GROOVE OR BELL AND SPIGOT JOINTS.

② THE INSIDE OF THE THREADED INSERTS SHALL BE CLEAN TO ALLOW THE INSERTION OF THREADED EYE BOLTS.

③ HOLES SHALL BE CAST-IN-PLACE OR DRILLED 12 INCHES FROM ℄ OF TONGUE AND GROOVE.

④ BOLT PROJECTION INSIDE OF PIPE SHALL NOT EXCEED 2 INCHES.

⑤ OPENING TO BE ROD DIAMETER PLUS 1 INCH.

⑥ LENGTH ADEQUATE TO EXTEND TO WITHIN ½ INCH OF THE INNER SURFACE OF THE PIPE.

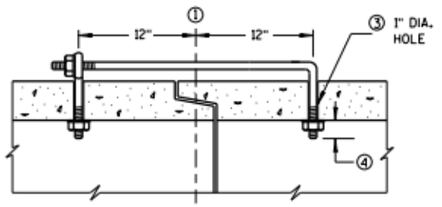

(TONGUE & GROOVE PIPE)

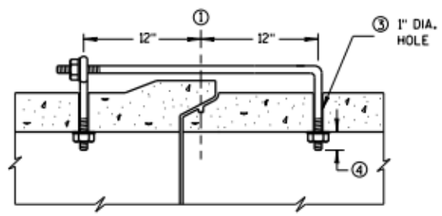

(MODIFIED BELL PIPE)

LONGITUDINAL SECTION

EYE BOLT DIMENSION TABLE

PIPE SIZE	L = LENGTH	
	TONGUE & GROOVE PIPE	MODIFIED BELL PIPE
18" TO 24"	4 ½"	6 ¼"
30"	5"	7"
36"	5 ½"	7"
42"	6"	
48"	6 ½"	
60"	7 ½"	
66"	8"	

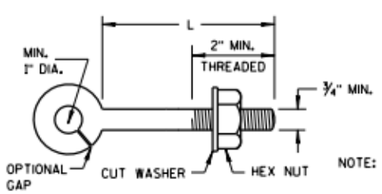

EYE BOLT

NOTE: TWO EYE BOLTS MAY BE USED WITH A 30" LONG THREADED ROD IN LIEU OF THE 90° BENT TIE ROD.

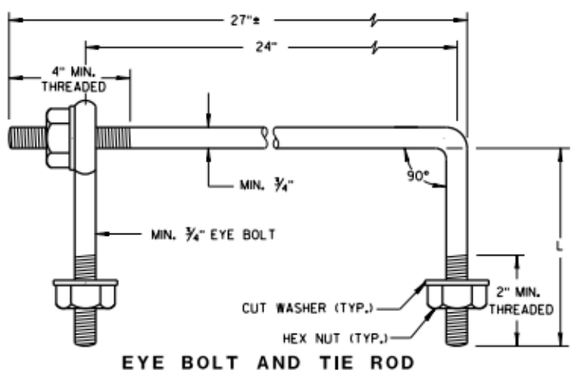

EYE BOLT AND TIE ROD

(JOINT TIES FOR 18" TO 66" DIA. CONCRETE PIPE)

EYE BOLT AND TIE ROD ASSEMBLY (ALTERNATE NO. 2)

ADJUSTABLE TIE ROD TABLE

PIPE DIAMETER	TIE ROD DIAMETER	D	L_1	N
12-60	⅝	⅝	5	½
66-84	¾	¾	5	½
90-108	1	1	7	1 3/16

DIMENSIONS SHOWN ARE IN INCHES

TAPERED PLAIN

RIGHT AND LEFT THREADS

SLEEVE NUTS

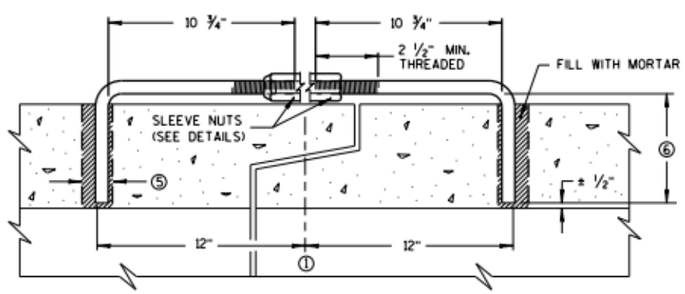

LONGITUDINAL SECTION

(JOINT TIES FOR 12" TO 108" DIA. CONCRETE PIPE)

ADJUSTABLE TIE ROD (ALTERNATE NO. 3)

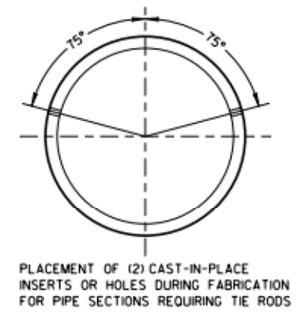

PLACEMENT OF (2) CAST-IN-PLACE INSERTS OR HOLES DURING FABRICATION FOR PIPE SECTIONS REQUIRING TIE RODS

TRANSVERSE SECTION

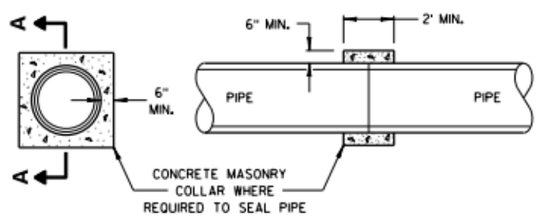

SECTION A-A

CONCRETE COLLAR DETAIL

JOINT TIES FOR CONCRETE PIPE AND CONCRETE COLLAR DETAIL

DIMENSIONS IN INCHES											
PIPE DIA.	A	B	C	D	E	F	G	H	J	L	Z
**4	6	12	5¼	9	8	32	36	11	2⅜	6½	4
6	8	14	7¼	11	10	42	44	13	3⅝	8½	6

**APRON ENDWALL FOR 6 INCH DIAMETER PIPE MAY BE SUBSTITUTED FOR THIS SIZE PROVIDED THE HOLE IN THE HEADWALL IS SIZED AND LOCATED TO CONFORM TO THE 4 INCH DIAMETER PIPE DIMENSIONS (C & J)

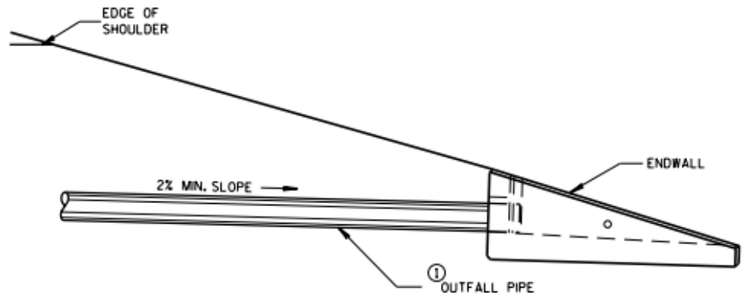

INSTALLATION DETAIL

GENERAL NOTES

DETAILS OF CONSTRUCTION, MATERIALS AND WORKMANSHIP NOT SHOWN ON THIS DRAWING SHALL CONFORM TO THE PERTINENT REQUIREMENTS OF THE STANDARD SPECIFICATIONS AND THE APPLICABLE SPECIAL PROVISIONS.

ALTERNATIVE DESIGNS WHICH PROVIDE EQUIVALENT CAPACITY AND STRENGTH MAY BE USED WHEN APPROVED BY THE ENGINEER. ENDWALL MAY BE EITHER PRECAST OR CAST-IN-PLACE CONCRETE.

THE UNDERDRAIN PIPE SHALL BE FULLY INSERTED AND SEALED INTO THE ENDWALL WITH CEMENT MORTAR PRIOR TO BACKFILLING AROUND THE STRUCTURE.

THE UPPERMOST POINT OF THE ENDWALL SHALL BE PLACED FLUSH WITH THE ROADWAY SLOPE. ADJACENT EMBANKMENT SLOPES SHALL BE SHAPED TO FIT THE SIDES AND TOE OF THE ENDWALL. EXACT PLACEMENT OF THE OUTFALL PIPE AND ENDWALL SHALL BE DETERMINED BY THE ENGINEER TO MATCH THE ELEVATIONS AND FLOW DIRECTION OF THE ROADSIDE DITCH.

① THE OUTFALL PIPE UNDERDRAIN AND FITTINGS SHALL CONFORM TO THE REQUIREMENTS OF THE SPECIFICATION FOR POLY (VINYL CHORIDE) (PVC) PLASTIC DRAIN, WASTE AND VENT PIPE AND FITTINGS, ASTM DESIGNATION: D 2665, SCHEDULE 40 PVC OR THE STANDARD SPECIFICATION FOR TYPE PSM POLY (VINYL CHORIDE) (PVC) SEWER PIPE AND FITTINGS, ASTM DESIGNATION: D 3034, TYPE PSM SDR 23.5 PVC SEWER PIPE, ALL JOINTS SHALL BE SOLVENT WELDED.

THE OUTFALL PIPE INCLUDING ALL FITTINGS AND THE RODENT SHIELD SHALL BE MEASURED AND PAID FOR AS PIPE UNDERDRAIN UNPERFORATED.

② THE RODENT SHIELD SHALL BE A PVC GRATE SIMILAR TO THIS DETAIL. THE GRATE IS COMMERCIALLY AVAILABLE AS A FLOOR STRAINER. A PIPE COUPLING IS REQUIRED FOR THE ATTACHMENT OF THIS SHIELD TO THE OUTFALL PIPE. THE SHIELD SHALL BE FASTENED TO THE PIPE COUPLING WITH TWO OR MORE NO. 10 X 1-INCH STAINLESS STEEL SHEET METAL SCREWS.

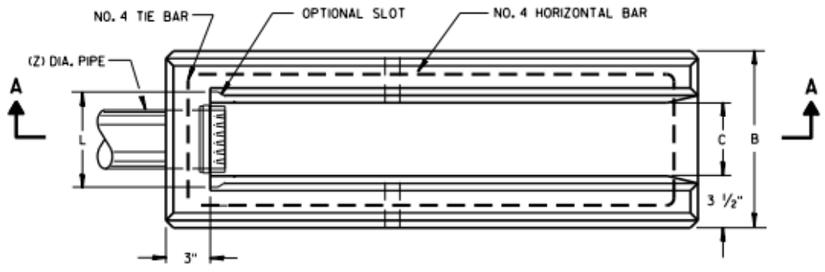

PLAN VIEW

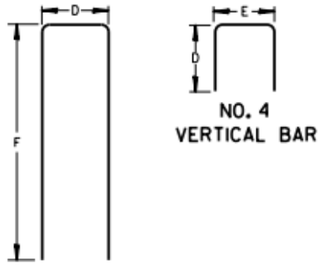

BAR STEEL REINFORCEMENT DETAILS

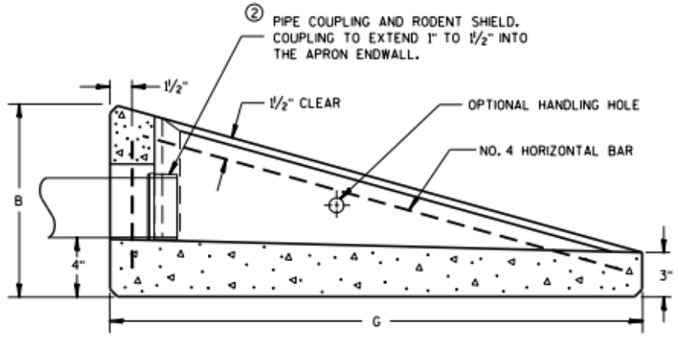

SECTION A-A

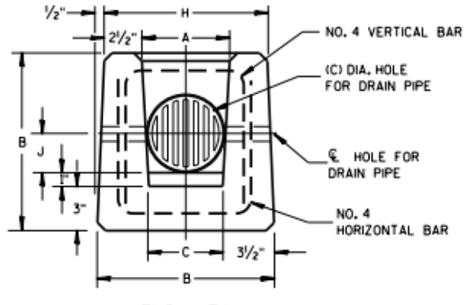

END VIEW

CONCRETE APRON ENDWALL FOR UNDERDRAIN

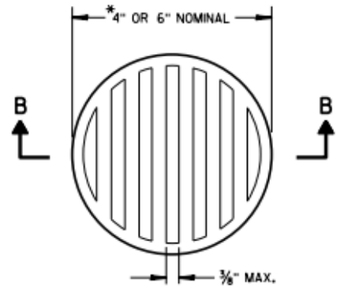

NOTE: ORIENT SHIELD SO SLOTS ARE VERTICAL.

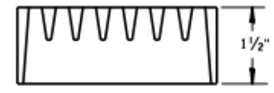

SECTION B-B

② RODENT SHIELD

*NOTE: DIMENSIONS ARE APPROXIMATE. THE GRATE IS SIZED TO FIT INTO A PIPE COUPLING.

REINFORCED CONCRETE APRON ENDWALL FOR PIPE UNDERDRAIN

PROJECT NO: RD16-003	HWY: CTH S	COUNTY: KENOSHA	CONSTRUCTION DETAILS	SHEET: 50	E

FILE NAME : _____ PLOT DATE : _____ PLOT BY : _____ PLOT NAME : _____ PLOT SCALE : 1:1

2

GENERAL NOTES

DETAILS OF CONSTRUCTION, MATERIALS AND WORKMANSHIP NOT SHOWN ON THIS DRAWING SHALL CONFORM TO THE PERTINENT REQUIREMENTS OF THE STANDARD SPECIFICATIONS AND THE APPLICABLE SPECIAL PROVISIONS.

(1) SEE PLAN FOR MEDIAN NOSE WIDTH AND RADIUS (FOR ROUND NOSE ALTERNATE).

(2) WIDTH OF GUTTER TO MATCH EXISTING ADJACENT GUTTER OR AS SPECIFIED ELSEWHERE IN THE PLAN.

(3) DEPTH EQUAL TO ADJACENT PAVEMENT. ADJACENT PAVEMENT STRUCTURE DETAILS ARE SHOWN ON THE PLAN. TYPICAL OPTIONS ARE:

(1) NEW OR EXISTING CONCRETE PAVEMENT.

(2) ASPHALTIC CONCRETE PAVEMENT OVER NEW OR EXISTING CONCRETE BASE COURSE.

(3) ASPHALTIC CONCRETE PAVEMENT OVER CRUSHED AGGREGATE BASE COURSE.

(4) TIE BARS OR PAVEMENT TIES REQUIRED IN NEW CONCRETE PAVEMENT OR CONCRETE BASE COURSE. TIE BARS SHALL BE NO. 4 X 2'-0" SPACED AT 2'-0" C-C.

PAVEMENT TIES REQUIRED IN EXISTING CONCRETE BASE COURSE. PAVEMENT TIES SHALL BE NO. 6 X 1'-0" SPACED AT 3'-0" C-C INSTALLED ON A HORIZONTAL SKEW OF 6:1. THE DIRECTION OF SKEW SHALL ALTERNATE AFTER EVERY ONE OR TWO BARS.

(5) SURFACE TYPE AND DETAILS ARE SHOWN ELSEWHERE IN THE PLAN.

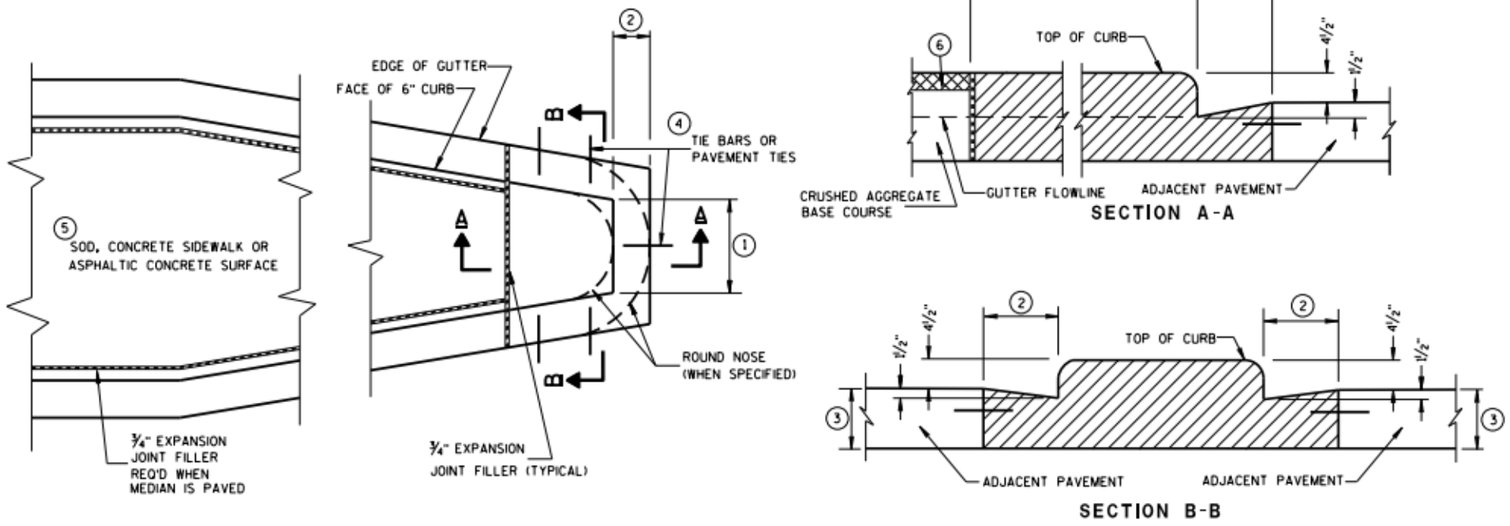

CONCRETE MEDIAN BLUNT NOSE DETAIL

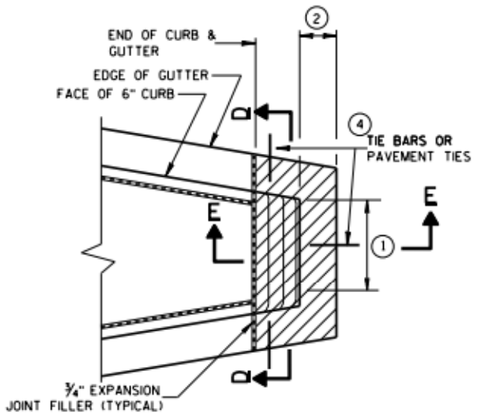

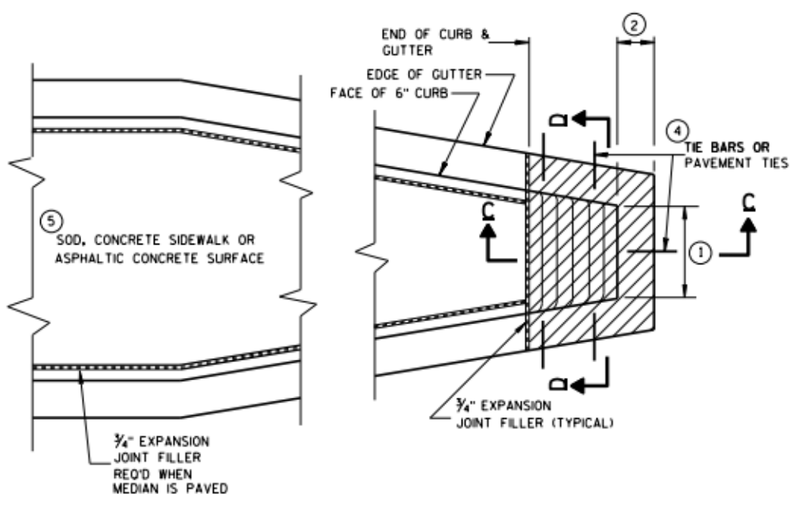

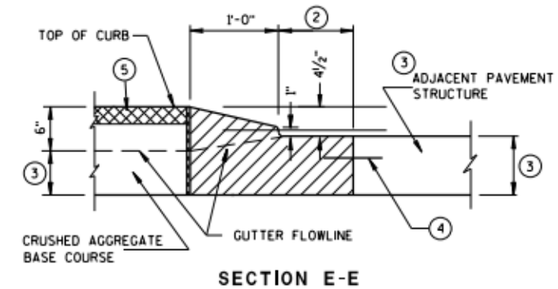

CONCRETE MEDIAN SLOPED NOSE TYPE 1

CONCRETE MEDIAN SLOPED NOSE TYPE 2

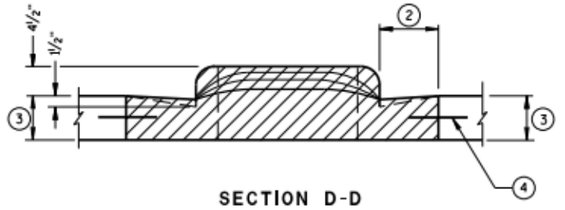

CONCRETE MEDIAN NOSE

PROJECT NO: RD16-003	HWY: CTH S	COUNTY: KENOSHA	CONSTRUCTION DETAILS	SHEET: 51	E

FILE NAME : _____ PLOT DATE : _____ PLOT BY : _____ PLOT NAME : _____ PLOT SCALE : 1:1

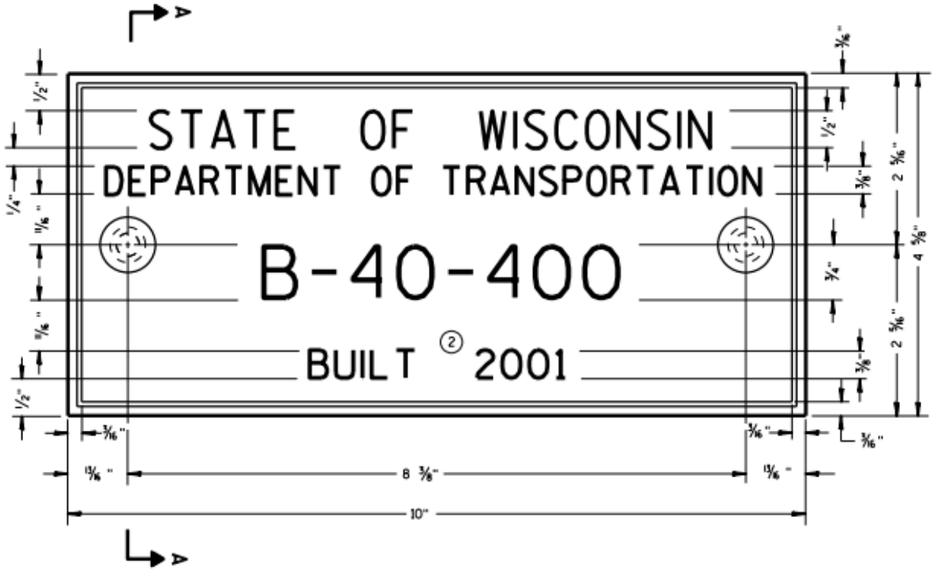

TYPICAL NAME PLATE
(BRIDGES. CULVERTS. AND RETAINING WALLS)

GENERAL NOTES

NAME PLATES TO BE INSTALLED ON BRIDGES. CULVERTS. AND RETAINING WALLS SHALL CONFORM TO THE REQUIREMENTS OF SECTION 502.3.11 OF THE STANDARD SPECIFICATIONS.

THE BRIDGE NUMBER AND YEAR BUILT SHOWN ON THIS DRAWING ARE EXAMPLES ONLY. SEE CONSTRUCTION PLANS FOR INDIVIDUAL NUMBERING AND YEAR BUILT.

① EPOXY RESIN SHALL BE FROM AN APPROVED MANUFACTURER AND USED IN ACCORDANCE WITH MANUFACTURER'S RECOMMENDATIONS.

② REHABILITATION OF AN EXISTING STRUCTURE SHOULD USE THE DATE OF ORIGINAL STRUCTURE CONSTRUCTION.

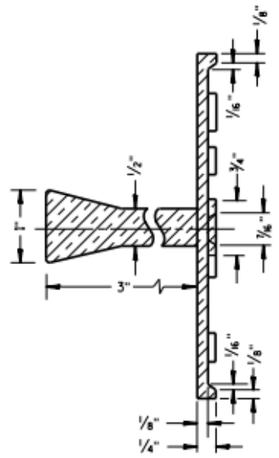

SECTION A-A

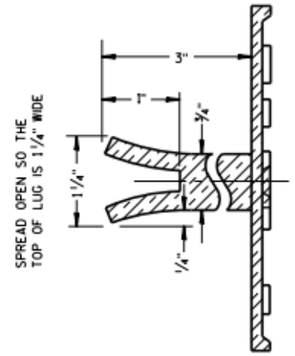

ALTERNATE LUG

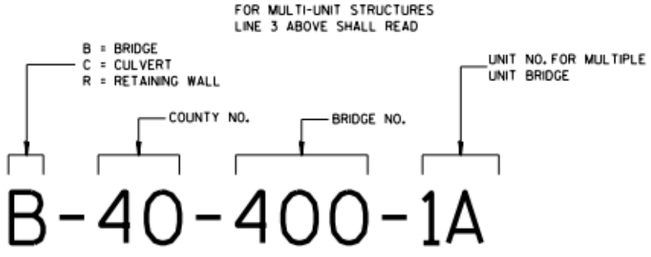

NUMBERING DESIGNATION
MULTI-UNIT STRUCTURES

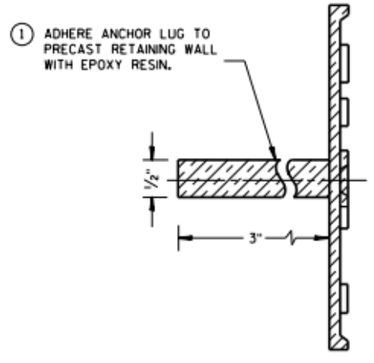

ALTERNATE LUG
(FOR ATTACHMENT TO PRECAST STRUCTURES)

NAME PLATE (STRUCTURES)

PROJECT NO: RD16-003	HWY: CTH S	COUNTY: KENOSHA	CONSTRUCTION DETAILS	SHEET: 52	E

FILE NAME : _____ PLOT DATE : _____ PLOT BY : _____ PLOT NAME : _____ PLOT SCALE : 1:1

2

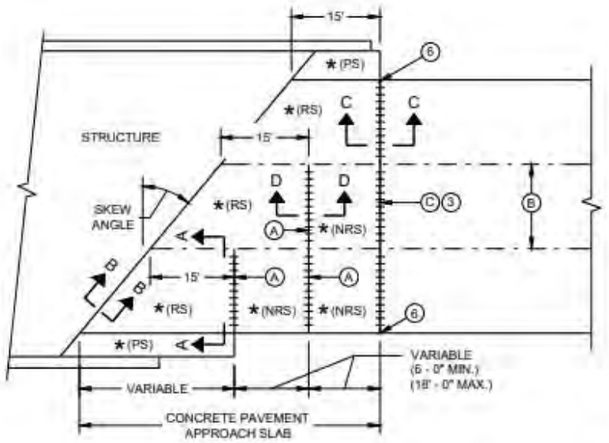

SKEWED APPROACH
(PAVEMENT MORE THAN TWO LANES)

★ (RS) = REINFORCED CONCRETE SLAB

★ (PS) = PAVECD CONCRETE SHOULDER OR CONCRETE DRAINAGE SLAB

★ (NRS) - NON - REINFORCED CONCRETE SLAB

★★★ STANDARD DOWEL BAR DIAMETER (SEE SDD 13C11 AND SDD 13C13)

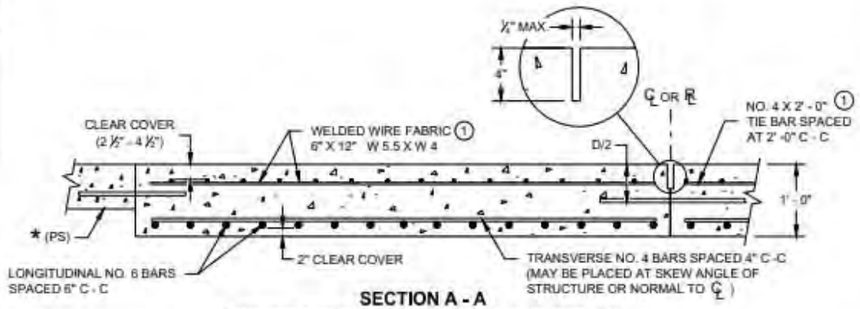

SECTION A - A
REINFORCEMENT POSITIONING DETAIL

GENERAL NOTES

THE CONTRACTOR MAY SPLICE NO. 6 BARS IN THE APPROACH SLAB FOR SKEWED STRUCTURES ONLY. STAGGER SPLICES WITH A MAXIMUM OF ONE SPLICE PER BAR. THE LENGTH OF LAP IS 20 INCHES.

TACK WELD DOWEL BARS TO THE BASKETS ON ALTERNATE ENDS.

(1) THE CONTRACTOR MAY USE NO. 4 BARS SPACED AT 2' - 0 " C - C IN BOTH THE LONGITUDINAL AND TRANSVERSE DIRECTIONS FOR TOP REINFORCEMENT AS AN ALTERNATIVE TO THE WELDED WIRE FABRIC.

(2) THE CONTRACTOR MAY OMIT THE BARS BETWEEN REINFORCED SLABS WHERE SLAB REINFORCEMENT BARS EXTEND ACROSS THE CENTERLINE OR REFERENCE LINE

(3) DO NOT CONSTRUCT AN EXPANSION JOINT OR INSTALL DOWEL BARS WHEN ABUTTING AN HMA PAVEMENT.

(4) USE A JOINT SEALANT MEETING THE REQUIREMENTS OF ASTM D6690.

(5) PLACE EXPANSION CAP ON THE END OF THE DOWEL THAT IS NOT TACK WELDED TO THE BASKET. DO NOT FORCE DOWEL BAR PAST THE DOWEL STOP.

(B) EXTEND EXPANSION JOINT THROUGH ANY ADJACENT TIED CONCRETE.

(A) STANDARD CONTRACTION JOINT NORMAL TO ℄ OR ℞.

(B) STANDARD LONGITUDINAL JOINT WITH TIE BARS.

(C) 1 ½" EXPANSION JOINT WITH DOWEL BARS NORMAL TO ℄ OR ℞

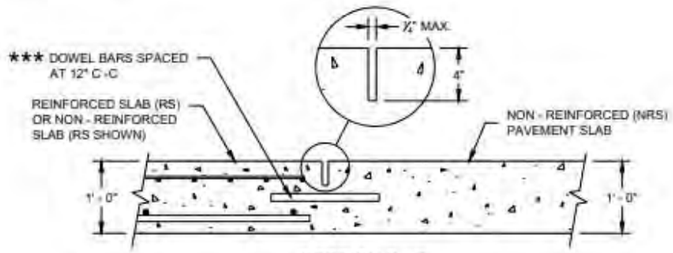

SECTION D - D
CONTRACTION JOINT

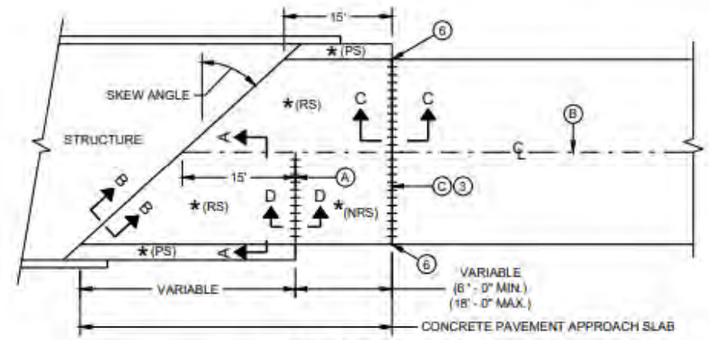

SKEWS > 20°
(PAVEMENT WIDTH ≤ 30')

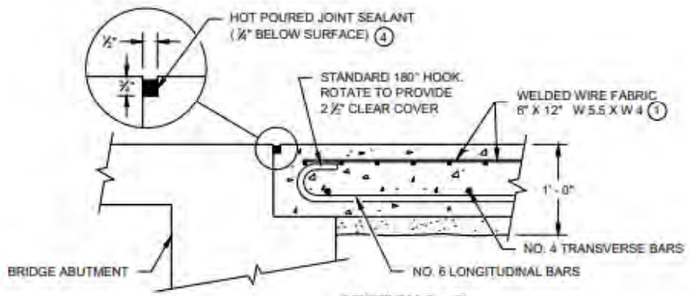

SECTION B - B
BEND DETAIL
BOTTOM REINFORCEMENT

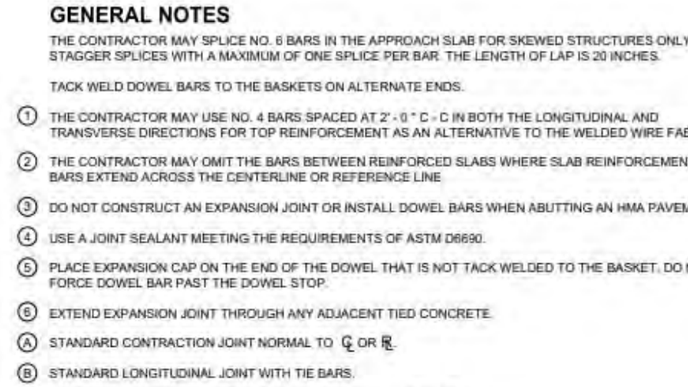

EXPANSION JOINT DETAIL

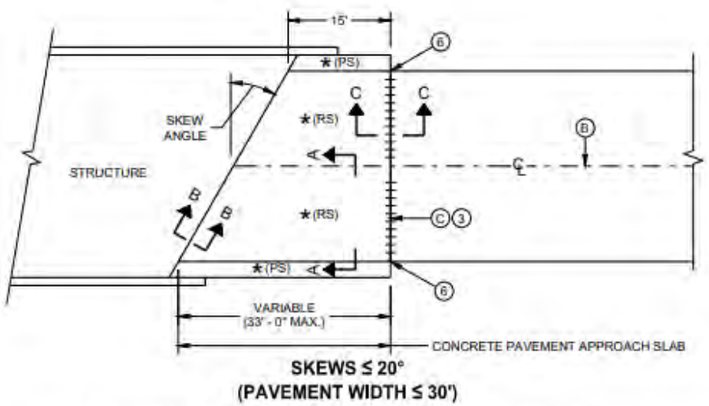

SKEWS ≤ 20°
(PAVEMENT WIDTH ≤ 30')

APPROACH SLAB AND ADJACENT PAVEMENT

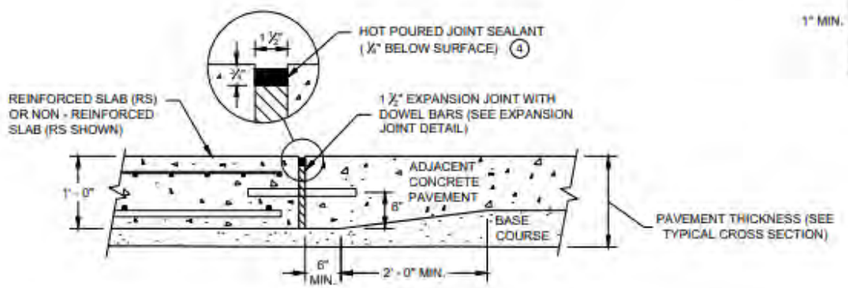

SECTION C - C
TRANSITION DETAIL
APPROACH SLAB TO ADJACENT PAVEMENT

CONCRETE PAVEMENT APPROACH SLAB

PROJECT NO: RD16-003	HWY: CTH S	COUNTY: KENOSHA	CONSTRUCTION DETAILS	SHEET: 53	E

FILE NAME : _____ PLOT DATE : _____ PLOT BY : _____ PLOT NAME : _____ PLOT SCALE : 1:1

2

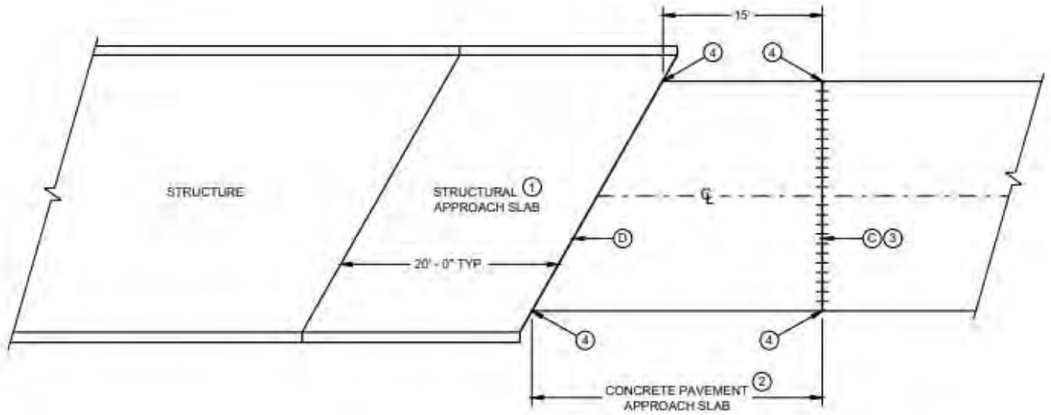

BRIDGE APPROACHES

GENERAL NOTES

ALL PROJECTS THAT INVOLVE A STRUCTURAL APPROACH SLAB WILL ALSO HAVE A CONCRETE PAVEMENT APPROACH SLAB.

1. SEE BRIDGE PLAN.
2. CONFORM TO SDD 13B02 SHEET A FOR CONCRETE PAVEMENT APPROACH SLAB DETAILS.
3. DO NOT CONSTRUCT AN EXPANSION JOINT OR INSTALL DOWEL BARS WHEN ABUTTING AN HMA PAVEMENT.
4. EXTEND EXPANSION JOINT THROUGH ANY ADJACENT TIED CONCRETE.

C. 1 ½" EXPANSION JOINT WITH DOWEL BARS NORMAL TO ℄ OR ℞.

D. 1 ½" EXPANSION JOINT (NO DOWELS)

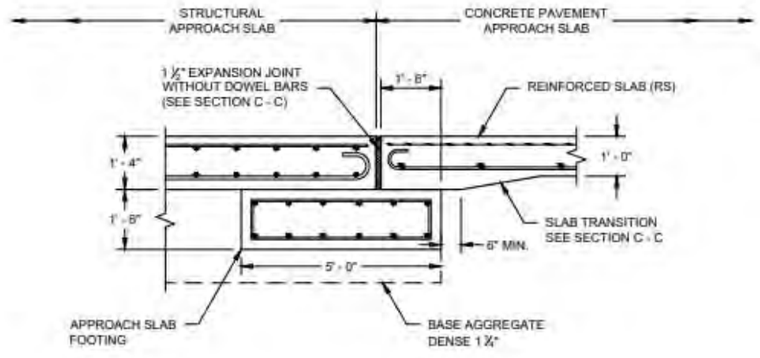

SECTION E - E
FOOTING DETAIL
STRUCTURAL APPROACH SLAB TO CONCRETE BRIDGE APPROACH

STRUCTURAL APPROACH SLAB AND CONCRETE PAVEMENT APPROACH SLAB

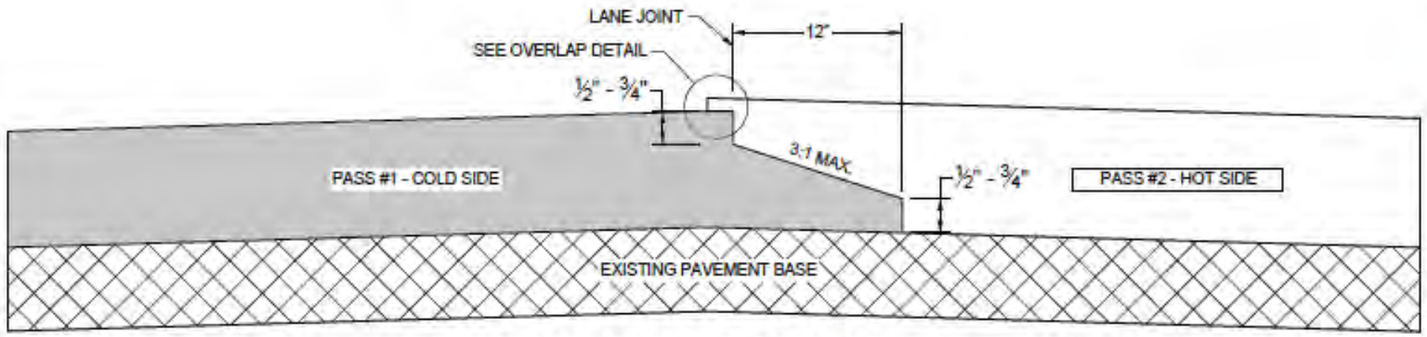

TYPICAL PAVEMENT CROSS SECTION
OF NOTCHED WEDGE LONGITUDINAL JOINT

GENERAL NOTES

IN ADDITION TO THE DETAILS PROVIDED IN THIS DRAWING, CONFORM TO STANDARD SPECIFICATION 450.3.2.8 FOR WHEN A NOTCHED WEDGE JOINT IS REQUIRED AND FOR GENERAL JOINT CONSTRUCTION REQUIREMENTS.

FOR ALL LONGITUDINAL JOINTS, ENSURE THE PAVER SCREED OVERLAPS THE PREVIOUSLY PLACED PAVEMENT BY 1" ± 0.5" AND THE HOT SIDE OF THE JOINT REMAINS HIGHER THAN THE COLD SIDE BY APPROXIMATELY 0.1" AFTER FINAL COMPACTION.

ONLY REMOVE THE LONGITUDINAL NOTCHED WEDGE JOINT FOR SMA PAVEMENT OR AS DIRECTED BY THE ENGINEER TO ADDRESS SPECIFIC LENGTHS OF JOINT DAMAGED BY TRAFFIC.

WHEN MILLING BACK OR REMOVING ANY LONGITUDINAL JOINT, LIMIT THE MATERIAL REMOVED TO 2" FROM THE TOP NOTCH OR FROM THE VERTICAL JOINT EDGE ON THE COLD SIDE OF THE JOINT.

USE LONGITUDINAL MILLED JOINT AS PLANS SHOW OR THE AS THE ENGINEER DIRECTS.

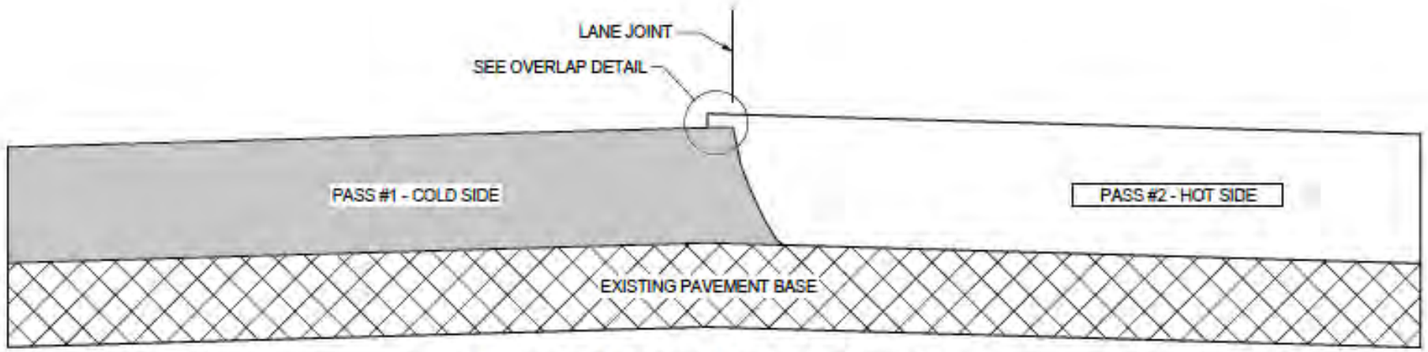

TYPICAL PAVEMENT CROSS SECTION
VERTICAL LONGITUDINAL JOINT

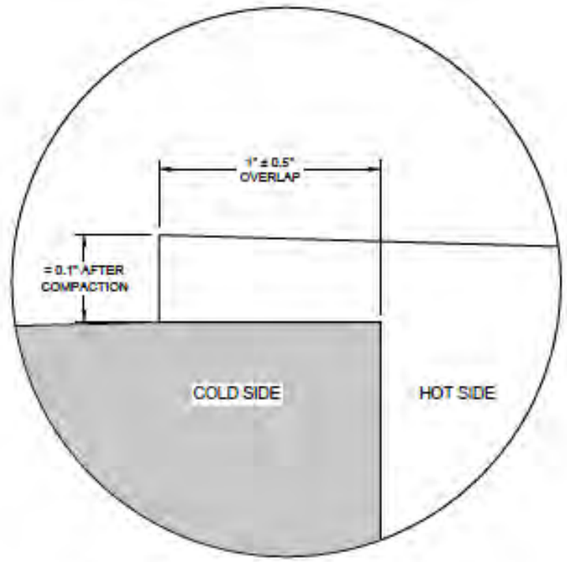

OVERLAP DETAIL (TYPICAL)

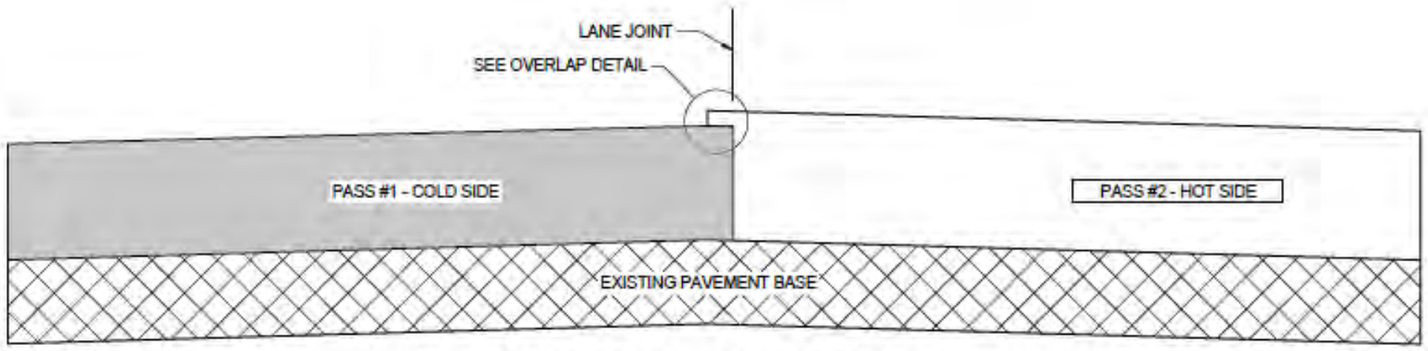

TYPICAL PAVEMENT CROSS SECTION
OF MILLED LONGITUDINAL JOINT

HMA LONGITUDINAL JOINTS

PROJECT NO: RD16-003	HWY: CTH S	COUNTY: KENOSHA	CONSTRUCTION DETAILS	SHEET: 55	E

FILE NAME : _____ PLOT DATE : _____ PLOT BY : _____ PLOT NAME : _____ PLOT SCALE : 1:1

2

① WOOD OR STEEL POSTS (w6X9 OR w6X8.5) MAY BE USED. DO NOT INTERMIX WOOD AND STEEL POSTS. INSTALL STEEL POSTS WITH HOLES ON APPROACHING TRAFFIC SIDE.

② USE WOOD OR APPROVED PLASTIC BLOCKOUTS. WOOD BLOCKOUTS MAY BE CONSTRUCTED OUT OF TWO OR MORE WOOD BLOCKOUTS. SEE ALTERNATE WOOD BLOCKOUT DETAIL. DIMENSIONS OF APPROVED PLASTIC BLOCKOUTS MAY VARY.

③ IF ROCK IS ENCOUNTERED DURING EXCAVATION, PROVIDE A HOLE 12 INCHES IN DIAMETER EXTENDING 20 INCHES DEEP INTO THE ROCK. PLACE APPROXIMATELY 2 1/2" INCHES OF GRANULAR MATERIAL IN THE BOTTOM OF THE HOLE. CUT THE POSTS THE TO LENGTH AMD INSTALL. BACKFILL WITH EXCAVATED MATERIAL AND COMPACT. BACKFILL IS TO BE FREE OF LARGE ROCKS.

④ WHEN THE DISTANCE FROM BACK OF POST TO SHOULDER HINGE POINT IS LESS THAN 2 FEET INSTALL LONGER POST AT HALF POST SPACING (K).

⑤ FOR NEW MGS INSTALLATION TOP OF W-BEAM RAIL TOLERANCE IS +1". FOR EXISTING MGS INSTALLATION TOP OF W-BEAM IS BETWEEN 27 ¾" TO 32".

⑥ WHEN USING STEEL POST AND WOOD BLOCKOUTS INSTALL FOUR 16D GALVANIZED NAILS. INSTALL NAILS AT THE BACK CORNERS OF THE BLOCK AND BEND THE NAILS OVER THE FLANGE OF THE STEEL POST.

⑦ TOTAL POST LENGTH FOR TYPE K IS 7' - 0".
TOTAL POST LENGTH FOR OTHER MGS TYPES IS 6' - 0".

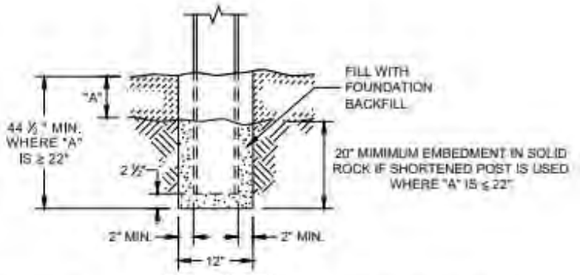

END VIEW
SETTING STEEL OR WOOD POST IN ROCK ③

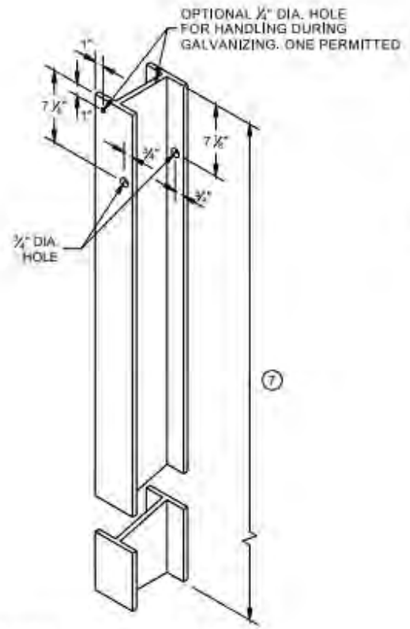

STEEL POST & HOLE PUNCHING DETAIL (W 6 X 9) ①

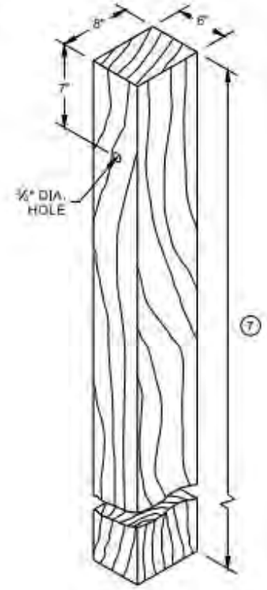

WOOD POST (6" X 8") NOMINAL ①

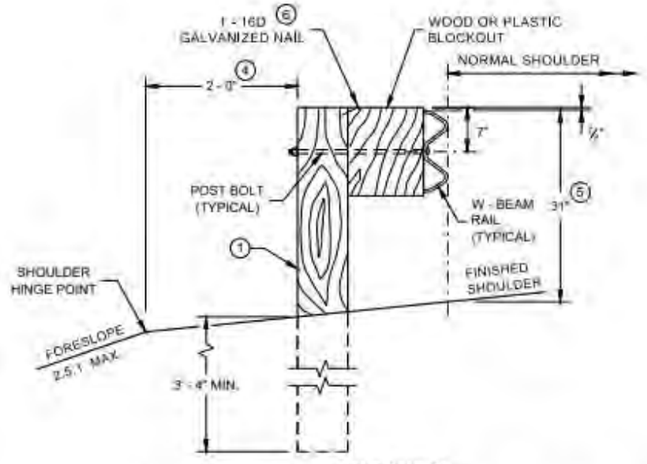

END VIEW
LOCATED ALONG A ROADWAY SHOULDER STANDARD INSTALLATION

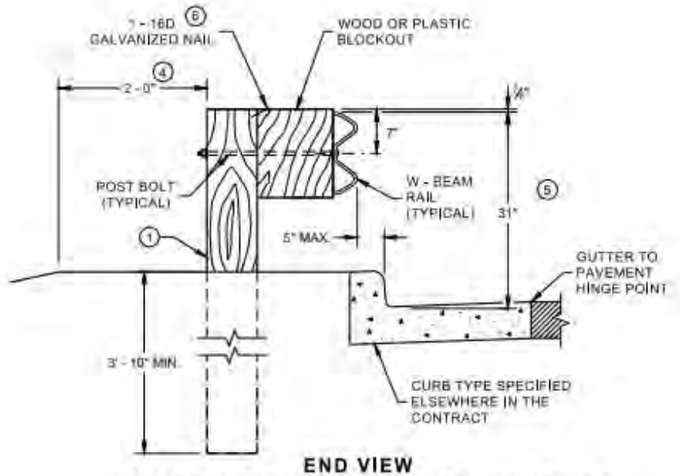

END VIEW
LOCATED ALONG A CURBED ROADWAY

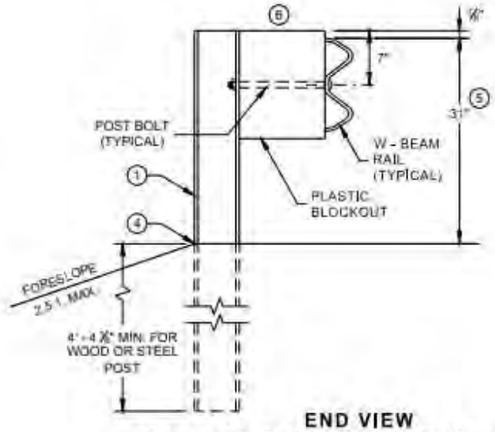

END VIEW
MGS LONGER POST AT HALFPOST SPACING W BEAM (K)

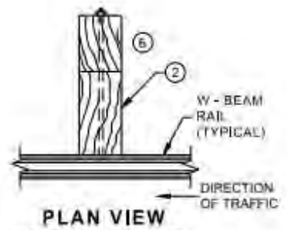

PLAN VIEW
WOOD POST, BLOCKOUT & BEAM

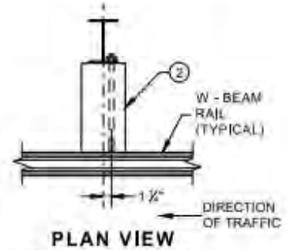

PLAN VIEW
STEEL POST, PLASTIC BLOCKOUT & BEAM

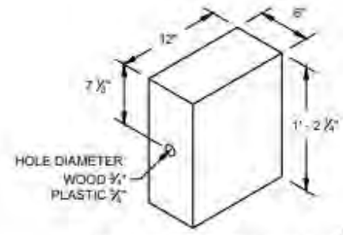

WOOD OR PLASTIC BLOCKOUT ②

MIDWEST GUARDRAIL SYSTEM (MGS) GUARDRAIL

PROJECT NO: RD16-003	HWY: CTH S	COUNTY: KENOSHA	CONSTRUCTION DETAILS	SHEET: 56	E

FILE NAME : _____ PLOT DATE : _____ PLOT BY : _____ PLOT NAME : _____ PLOT SCALE : 1:1

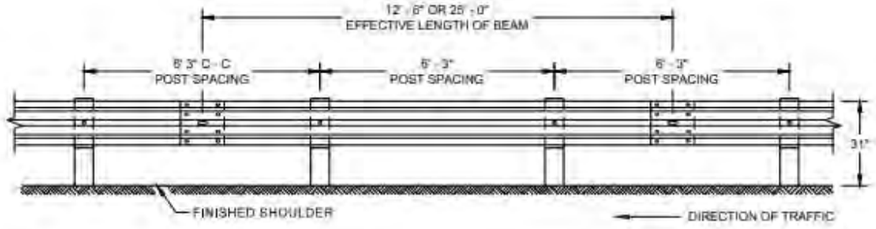

FRONT VIEW
POST SPACING STANDARD INSTALLATION

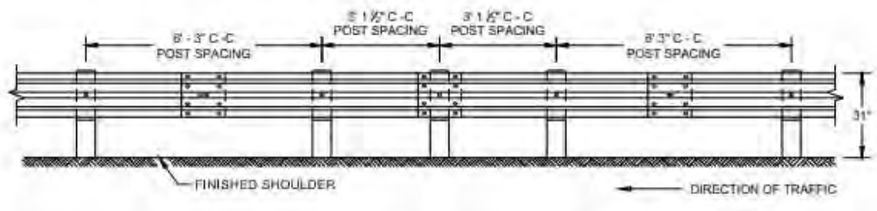

FRONT VIEW
HALF POST SPACING (HS) AND
HALF POST SPACING WITH LONGER POSTS (K)

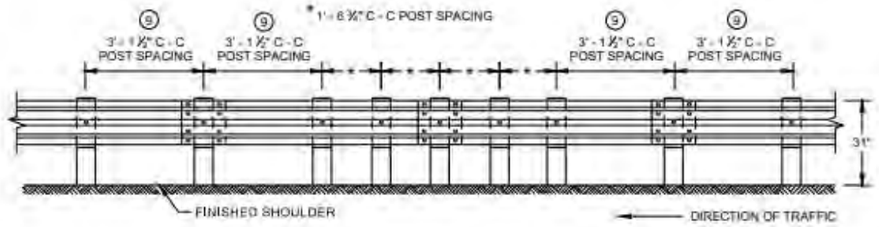

FRONT VIEW
QUARTER POST SPACING (QS)

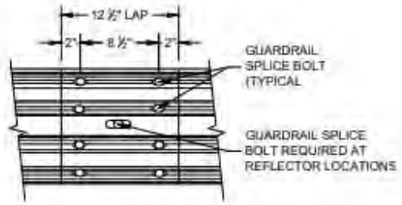

FRONT VIEW
MID-SPAN BEAM SPLICE

GENERAL NOTES

⑧ DO NOT INSTALL REFLECTORS ON THE FIRST 50 FEET OF THE APPROACH END OF THE ENERGY ABSORBING TERMINAL. RAIL SPLICE LOCATIONS ARE THE ONLY ACCEPTABLE LOCATIONS FOR REFLECTORS.

⑨ 25 FEET OF HALF POST SPACING IS REQUIRED ON APPROACH AND DEPARTURE ENDS OF QUARTER POST SPACING.

POST BOLTS ARE A ⅝" DIAMETER ASTM A307 GUARDRAIL BOLT. A POST BOLT REQUIRES ⅝" DIAMETER A563A DOUBLE RECESSED (DR) HEAVY HEX NUT AND ½" DIAMETER F844 FLAT WASHER. POST BOLTS MAY BE LONGER IF MULTIPLE BLOCKOUTS ARE BEING USED.

GUARD RAIL SPLICE BOLTS ARE A ⅝" DIAMETER ASTM A307 GUARDRAIL HEAD BOLT. A GUARDRAIL SPLICE BOLT REQUIRES ⅝" DIAMETER A563A DOUBLE RECESSED (DR) HEAVY HEX NUT.

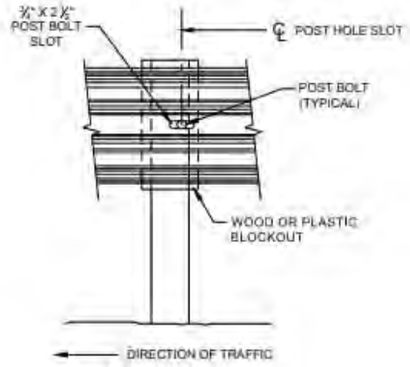

FRONT VIEW AT STEEL POST

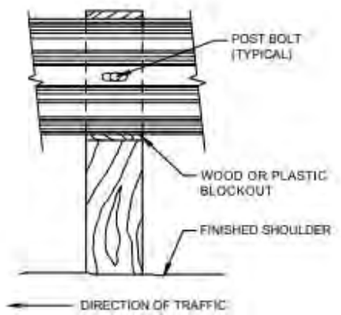

FRONT VIEW AT WOOD POST

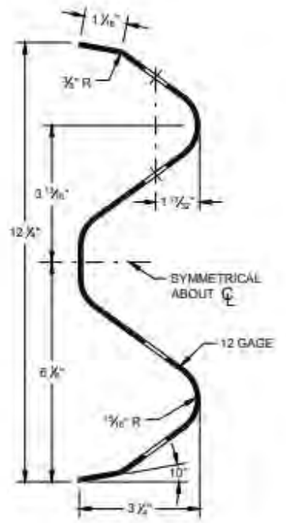

SECTION THRU W-BEAM RAIL

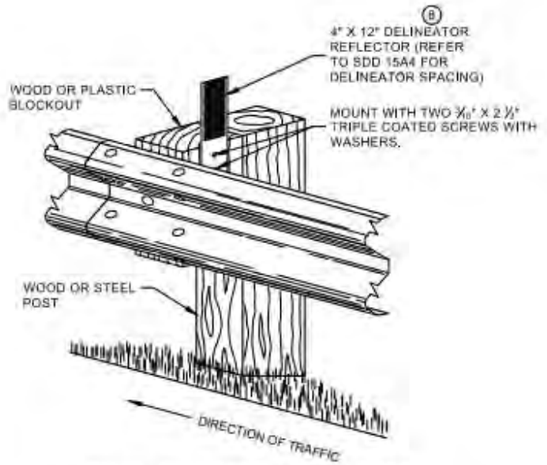

ONE SIDED REFLECTOR DETAIL
AND TYPICAL INSTALLATION

MIDWEST GUARDRAIL SYSTEM
(MGS) GUARDRAIL

PROJECT NO: RD16-003	HWY: CTH S	COUNTY: KENOSHA	CONSTRUCTION DETAILS	SHEET: 57	E

FILE NAME : _____ PLOT DATE : _____ PLOT BY : _____ PLOT NAME : _____ PLOT SCALE : 1:1

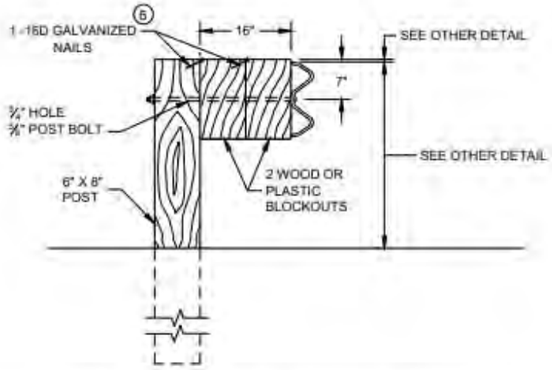

DETAIL FOR 16" BLOCKOUT DEPTH

IT IS ACCEPTABLE TO USE BLOCKOUTS UP TO 16" DEEP TO INCREASE THE POST OFFSET TO AVOID UNDERGROUND OBSTACLES. THERE IS NO LIMIT TO THE NUMBER OF POSTS THAT CAN HAVE ADDITIONAL BLOCKOUTS UP TO 16" DEEP.

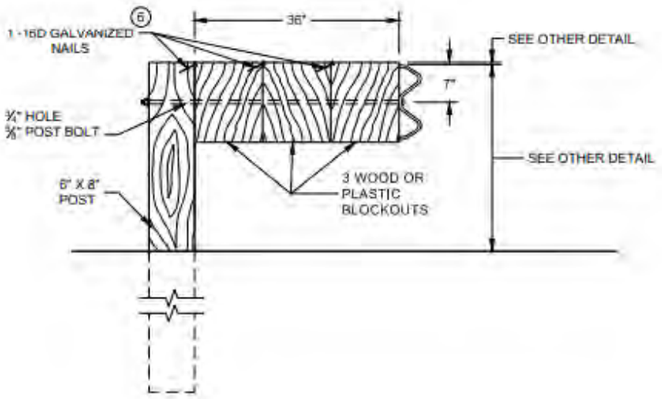

DETAIL FOR 36" BLOCKOUT DEPTH

NOTES: UNDER SPECIAL CIRCUMSTANCES, SUCH AS AVOIDING OBSTACLES THAT ARE NOT RELOCATED, IT IS ACCEPTABLE TO INSTALL ADDITIONAL BLOCKOUTS TO OBTAIN UP TO 36" DEPTH FOR ONE OR TWO POSTS IN A SECTION OF GUARDRAIL.

DO NOT USE 16" OR 36" BLOCKOUTS IF IT CAUSES THE POST TO BE DRIVEN BEYOND SHOULDER HINGE POINT OR CAUSES A FIXED OBJECT TO BE WITHIN THE DEFLECTION DISTANCE OF THE BARRIER.

NOTE:

1. ALL FILLETS SHALL HAVE A MINIMUM RADIUS OF 5/16".
2. IF THE BOLT EXTENDS MORE THAN ¼" FROM THE NUT THE BOLT SHOULD BE TRIMMED BACK.

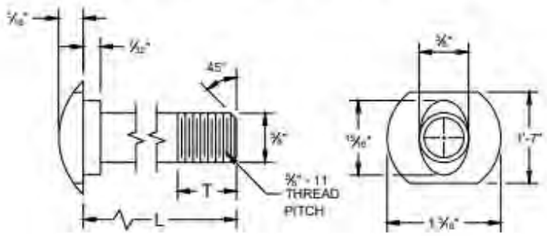

POST BOLT TABLE

L	T (MIN.)
1 ½"	1 ½"
2"	1 ½"
10"	4"
14"	4 5/16"
18"	4"
21"	4 5/16"
25"	4"

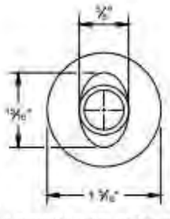

ALTERNATE BOLT HEAD

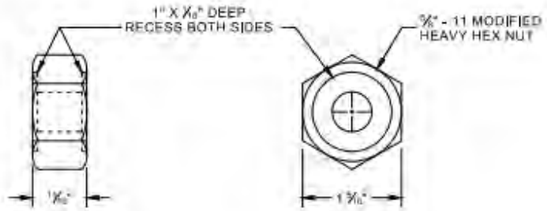

POST BOLT, SPLICE BOLT AND RECESS NUT

⑥ WHEN USING STEEL POST AD WOOD BLOCKOUTS, INSTALL FOUR 16D GALVANIZED NAILS. INSTALL NAILS AT THE BACK CORNERS OF THE BLOCK AND BEND THE NAILS OVER THE FLANGE OF THE STEEL POST.

PLAN VIEW BEAM LAPPING DETAIL

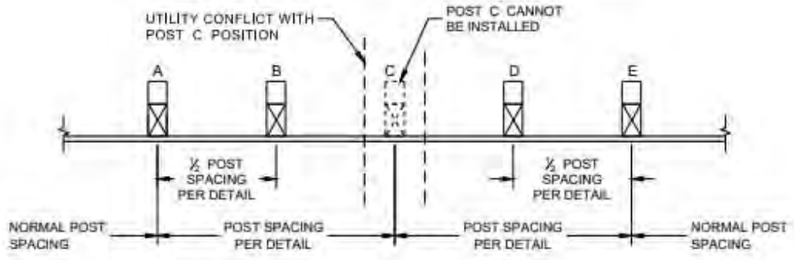

POST DRIVING FOR CONTINUOUS UNDERGROUND OBSTRUCTION

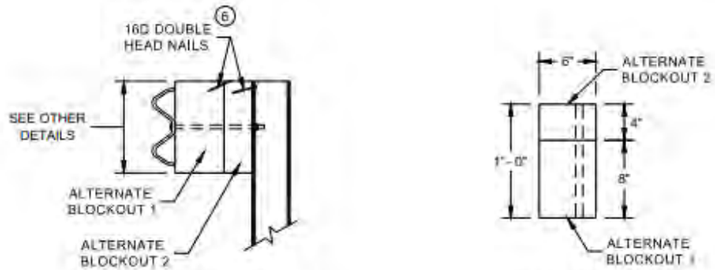

SIDE VIEW PLAN VIEW

ALTERNATE WOOD BLOCKOUT DETAIL

MIDWEST GUARDRAIL SYSTEM (MGS) GUARDRAIL

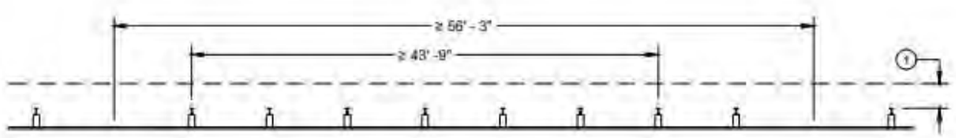

MISSING POST IN NORMAL BEAM GUARD RUN

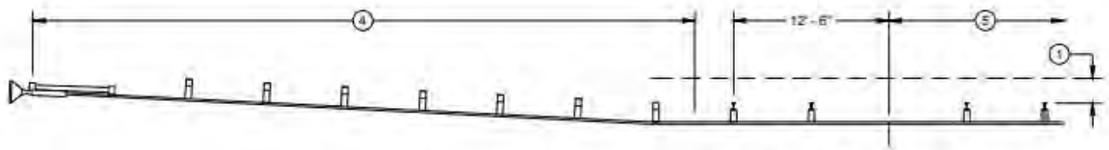

MISSING POST IN NORMAL BEAM GUARD RUN NEAR EAT

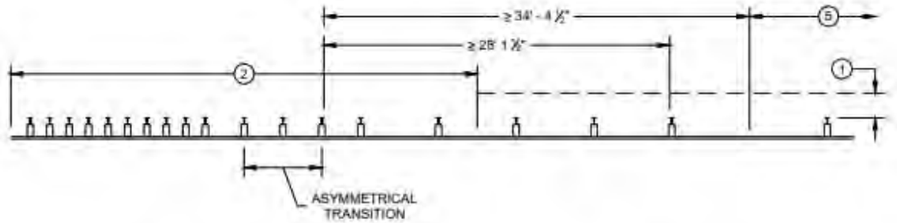

MISSING POST NEAR APPROACH THRIE BEAM TRANSITION

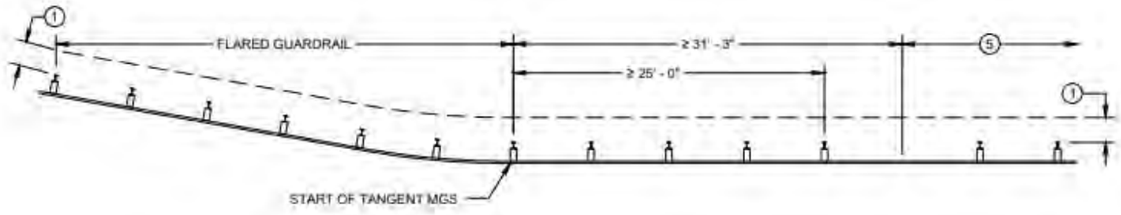

MISSING POST IN NORMAL BEAM GUARD RUN
NEAR FLARED BEAM GUARD

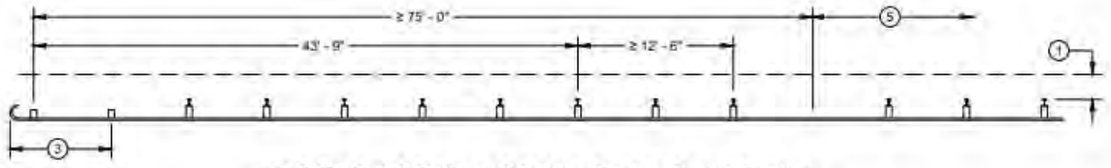

MISSING POST IN NORMAL BEAM GUARD RUN
NEAR TYPE 2 TERMINAL

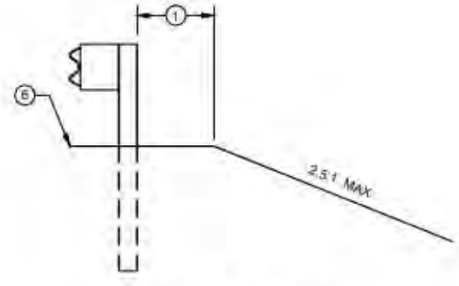

CROSS SECTION VIEW

MIDWEST GUARDRAIL SYSTEM (MGS) GUARDRAIL

1. MINIMUM OF 2 FEET OF GRADING BEHIND POST.
2. SEE SDD 14B45 FOR MORE DETAILS.
3. SEE SDD 14B47 FOR MORE DETAILS.
4. SEE SDD 14B44 FOR MORE DETAILS.
5. SEE MISSING POST IN NORMAL BEAM GUARD RUN FOR DISTANCE TO NEXT MISSING POST AND AREA FOR WELL DRAINED, COMPACTED SOILS.
6. SEE PLAN FOR SHOULDER DESIGN.

GENERAL NOTES

(A) THE SLOPE IN THE AREA BOUNDED BY THE GRADELINE, THE HINGE POINT LINE (HPL) AND THE CLEAR ZONE LIMITS (CZL) SHALL BE 4:1 OR FLATTER.

(B) AFTER FINAL ASSEMBLY, RECHECK CABLE TO BE SURE IT IS TAUT AND HAS NOT RELAXED.

(C) DIFFERENT MANUFACTURERS REQUIRE DIFFERENT PERFORATED W - BEAM RAIL END PANELS. SEE MANUFACTURER'S INFORMATION.

(D) ATTACH ALUMINUM SHEET TO E.A.T. HEAD USING 4 STAINLESS STEEL SELF - TAPPING SCREWS. ONE SCREW PER CORNER.

(E) HARDWARE MAY VARY BETWEEN MANUFACTURER. SEE MANUFACTURER'S DRAWING FOR INFORMATION.

(F) DIMENSIONS MAY VARY, MANUFACTURER'S INFORMATION.

SEE SDD 14B42 FOR MORE INFORMATION.

★ DO NOT ATTACH BLOCKOUTS TO POST 1 AND 2.

DO NOT INSTALL REFLECTORS ON THE FIRST 50 FEET OF THE APPROACH END OF THE ENERGY ABSORBING TERMINAL.

SEE MANUFACTURER'S DRAWING FOR SPLICE LOCATION, HARDWARE DIMENSIONS AND INSTALLATION INSTRUCTIONS.

THE CENTER OF THE UPPER 3 ½" DIAMETER HOLE ON POST NUMBER 3 THROUGH POST 9 IS TO BE FLUSH WITH THE GROUND LINE UP TO A MAXIMUM OF 2" ABOVE GROUND LINE. WOOD BLOCKS ON POSTS NUMBERED 3 THROUGH 9 MAY BE ADJUSTED UP TO 3" ABOVE THE TOP OF POST.

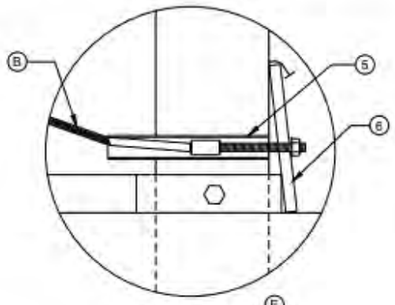

DETAIL "A" (E)

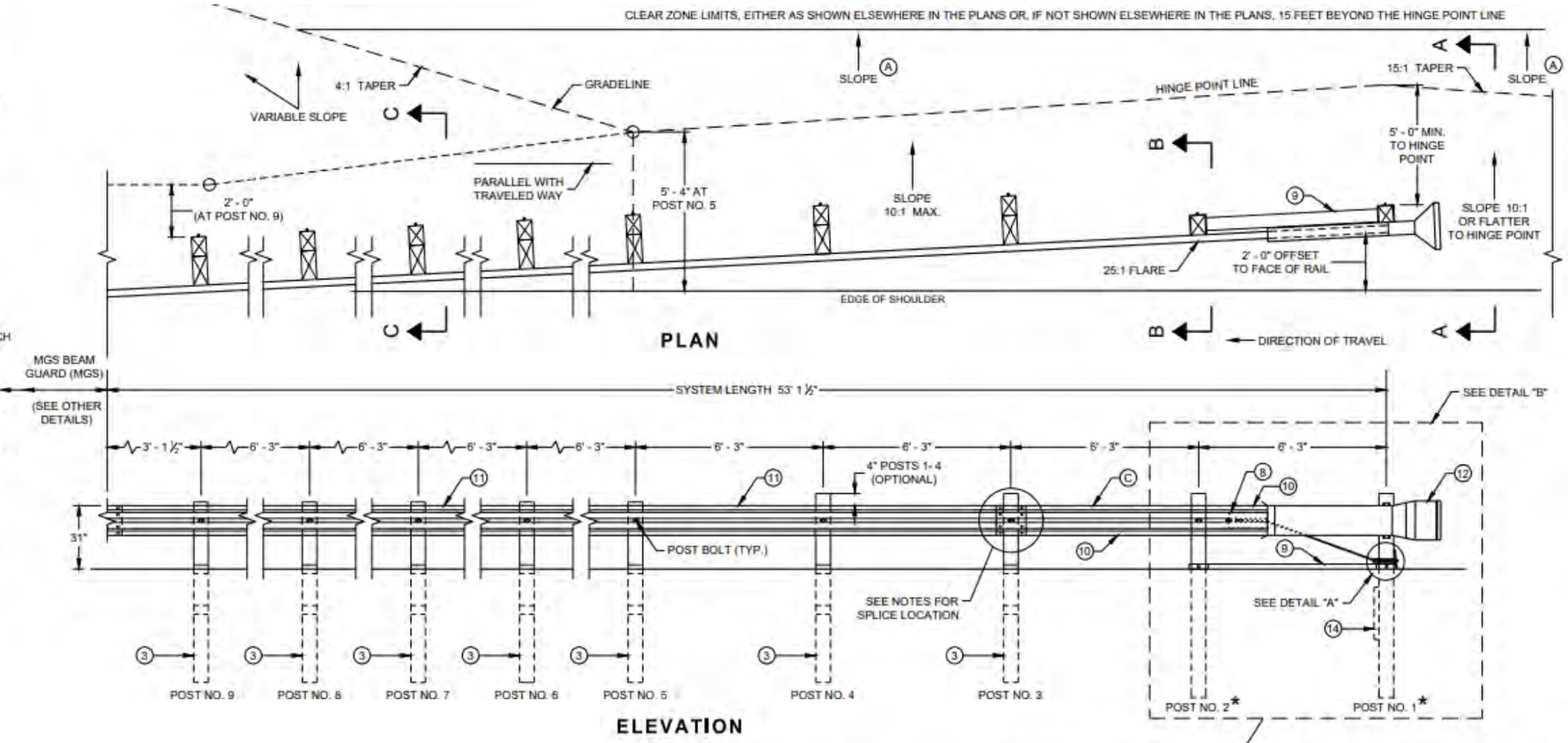

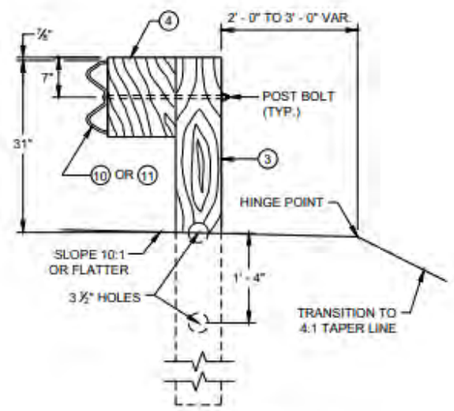

SECTION C - C
TYPICAL AT POST NOS. 3 - 9

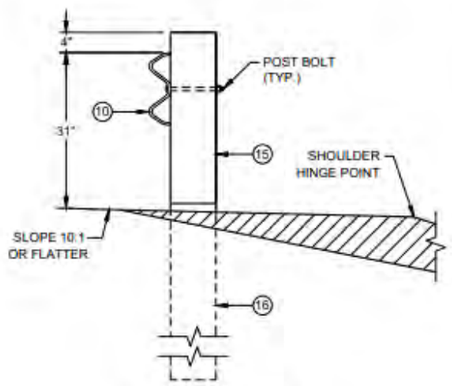

SECTION B - B
TYPICAL AT POST NO. 2*

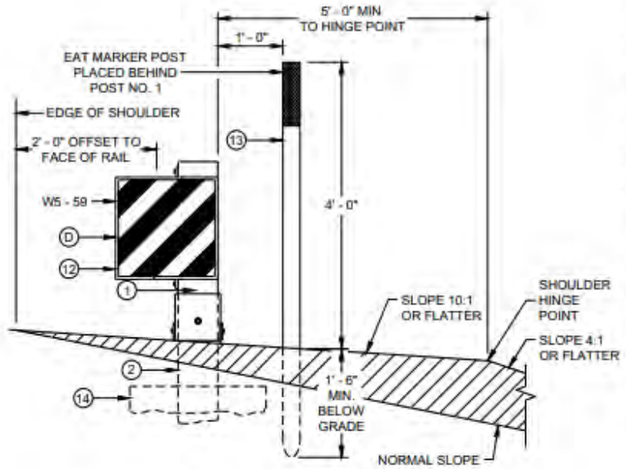

SECTION A - A
TYPICAL AT POST NO. 1*

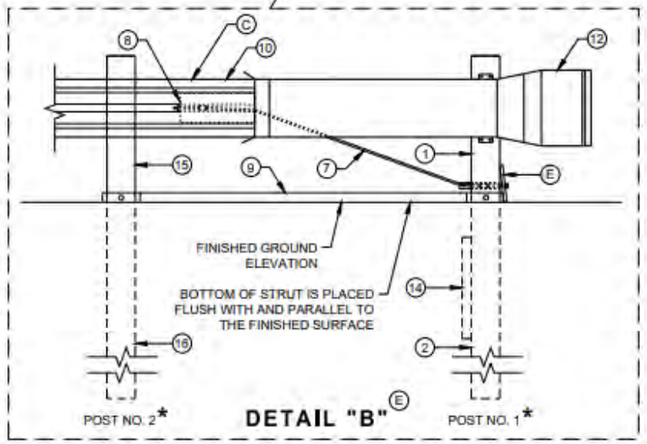

MIDWEST GUARDRAIL SYSTEM
ENERGY ABSORBING TERMINAL
(MGS)

PROJECT NO: RD16-003	HWY: CTH S	COUNTY: KENOSHA	CONSTRUCTION DETAILS	SHEET: 60	E

FILE NAME : _____ PLOT DATE : _____ PLOT BY : _____ PLOT NAME : _____ PLOT SCALE : 1:1

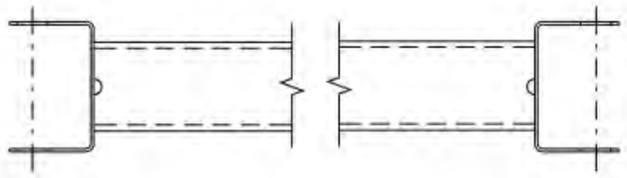

GENERIC GROUND STRUT ⑨Ⓔ

BILL OF MATERIALS

PART NO.	DESCRIPTION MATERIALS PROVIDED BY MGS EAT MANUFACTURER. SEE MANUGACTURER'S DETAILS FOR MORE INFORMATION.
①	UPPER POST NO. 1 6" X 6" TUBE
②	LOWER POST NO. 1
③	WOOD CRT
④	WOOD BLOCKOUT
⑤	PIPE SLEEVE
⑥	BEARING PLATE
⑦	BCT CABLE ASSEMBLY
⑧	ANCHOR CABLE BOX
⑨	GROUND STRUT
⑩	PERFORATED W-BEAM RAIL END PANEL 12'-6" LONG.
⑪	STANDARD W-BEAM RAIL. MULTIPLE SECTIONS REQUIRED. SECTIONS VARY IN LENGTH.
⑫	IMPACT HEAD
⑬	EAT MARKER POST - YELLOW (SEE APPROVED PRODUCTS LIST)
⑭	SOIL PLATE
⑮	UPPER POST NO. 2
⑯	LOWER POST NO. 2

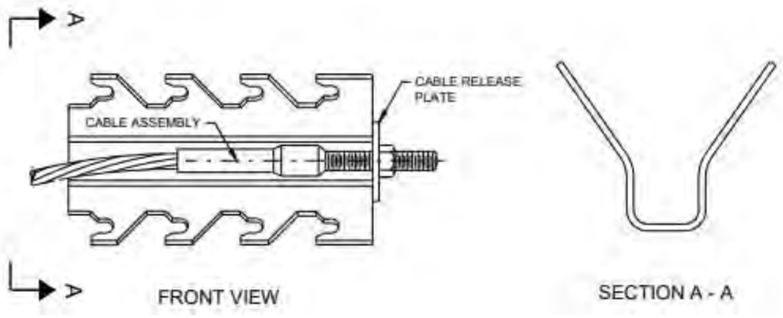

GENERIC ANCHOR CABLE BOX ⑧Ⓔ

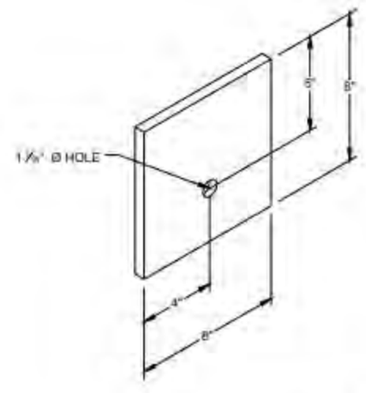

BEARING PLATE ⑥Ⓔ

MIDWEST GUARDRAIL SYSTEM
ENERGY ABSORBING TERMINAL
(MGS)

2

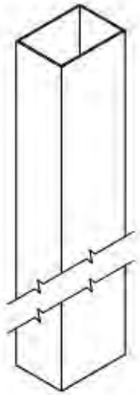

UPPER POST NO. 1 ① Ⓔ

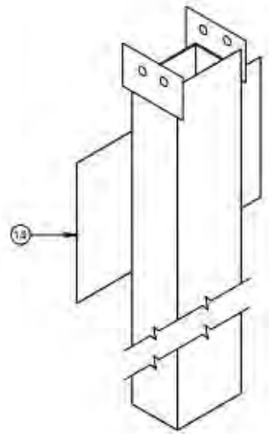

LOWER POST NO. 1 ② Ⓔ

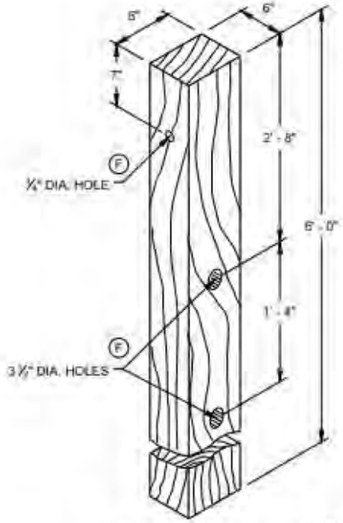

WOOD CRT POST ③ Ⓔ
POSTS NUMBER 3-9

UPPER POST NO. 2 ⑮ Ⓔ

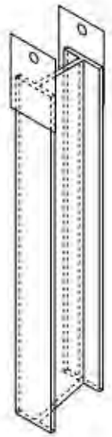

LOWER POST NO. 2 ⑯ Ⓔ

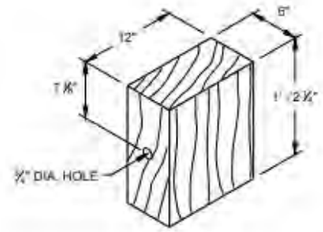

WOOD BLOCKOUT ④
REQ'D. AT ALL POSTS EXCEPT POST NO'S 1 & 2

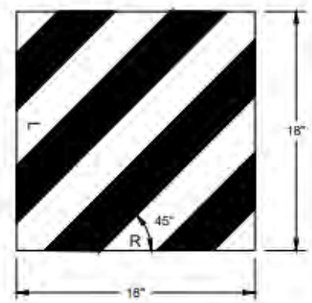

W5 - 59

REFLECTIVE SHEETING DETAIL Ⓔ

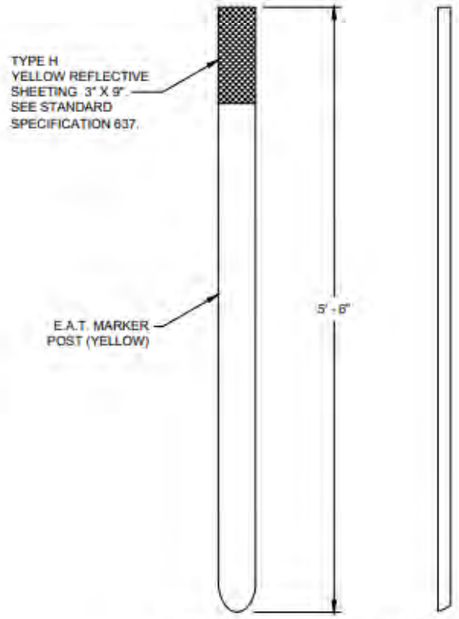

E.A.T. MARKER POST ⑬

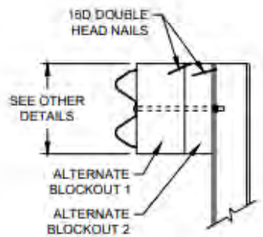

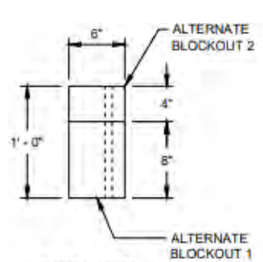

ALTERNATE WOOD
BLOCKOUT DETAIL

MIDWEST GUARDRAIL SYSTEM
ENERGY ABSORBING TERMINAL
(MGS)

PROJECT NO: RD16-003	HWY: CTH S	COUNTY: KENOSHA	CONSTRUCTION DETAILS	SHEET: 62	E

FILE NAME : _____ PLOT DATE : _____ PLOT BY : _____ PLOT NAME : _____ PLOT SCALE : 1:1

2

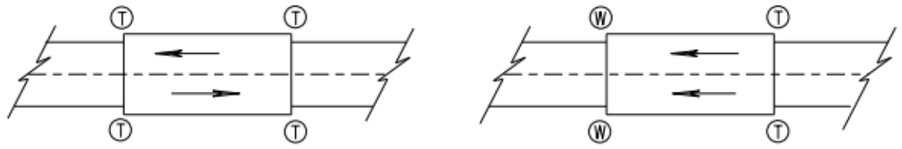

TWO WAY TRAFFIC

ONE WAY TRAFFIC

(T) THRIE BEAM CONNECTION

(W) W-BEAM CONNECTION WHEN REQUIRED

TYPICAL LOCATIONS OF THRIE BEAM AND W-BEAM CONNECTIONS TO BRIDGE

GENERAL NOTES

IF ROCK IS ENCOUNTERED, REMOVE ROCK TO FULL DEPTH OF POST PLUS 2½", AND 12" DIAMETER AROUND POST. SEE 14B42 FOR MORE DETAILS.

TRANSITION USES STEEL POSTS ONLY.

SEE STANDARD DETAIL DRAWING 14 B 42 FOR MORE INFORMATION.

POST 2 THROUGH 17 USES STEEL POST ONLY

(1) BRIDGE RAILING TYPE "W" DOES NOT REQUIRE A TERMINAL CONNECTOR.

(2) OPTIONAL CURB AND GUTTER OR DRAINAGE FEATURE SEE PLAN FOR INFORMATION.

(13) STEEL OR WOOD POST IS ACCEPTABLE AT POST 1. SEE SDD14B42

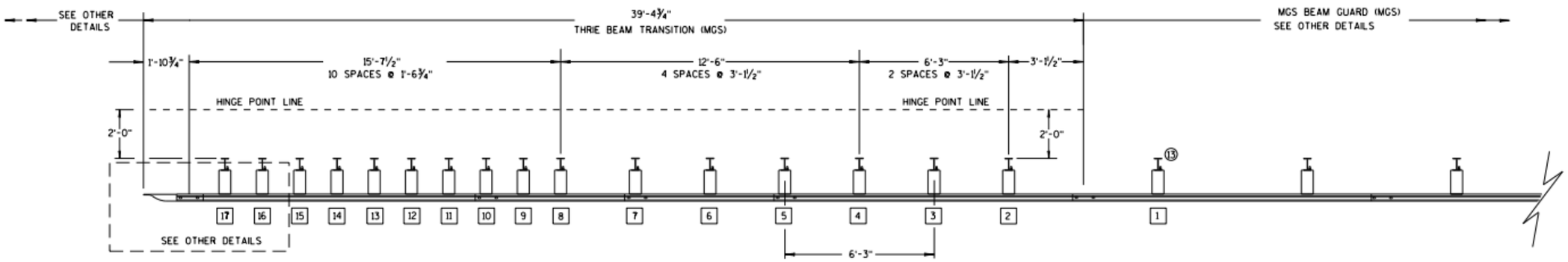

PLAN VIEW

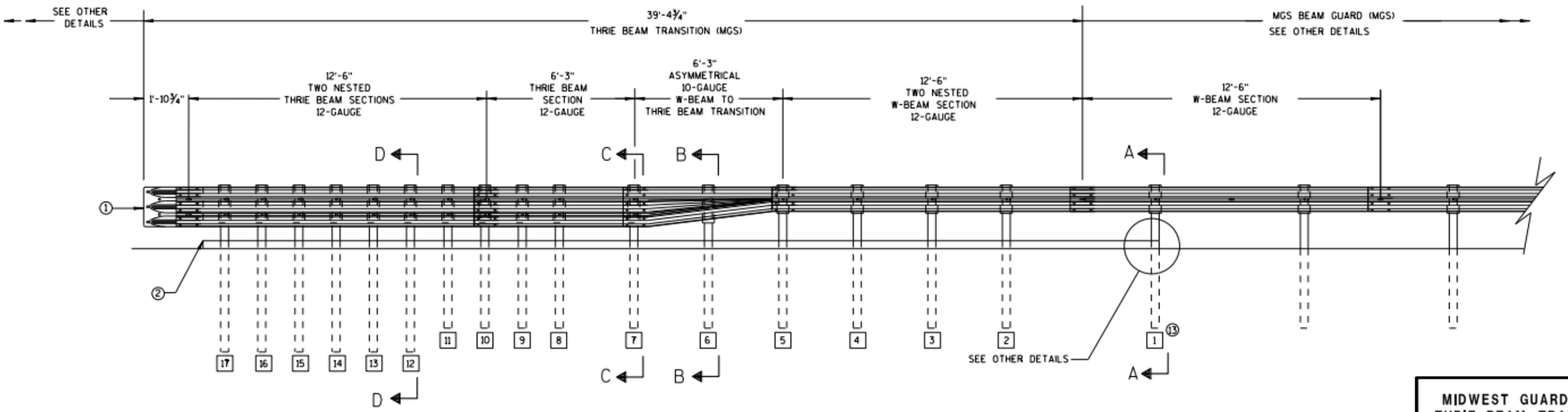

ELEVATION VIEW

MIDWEST GUARDRAIL SYSTEM
THRIE BEAM TRANSITION (MGS)

MIDWEST GUARDRAIL SYSTEM THRIE BEAM TRANSITION

PROJECT NO: RD16-003	HWY: CTH S	COUNTY: KENOSHA	CONSTRUCTION DETAILS	SHEET: 63	E

FILE NAME : _____ PLOT DATE : _____ PLOT BY : _____ PLOT NAME : _____ PLOT SCALE : 1:1

GENERAL NOTES

(2) OPTIONAL CURB AND GUTTER OR DRAINAGE FEATURE SEE PLAN FOR INFORMATION.

(3) WHEN USING STEEL POSTS AND WOOD BLOCKOUTS INSTALL FOUR 10D GALVANIZED NAILS. INSTALL NAILS AT THE BACK CORNERS OF THE BLOCK AND BEND THE NAILS OVER THE FLANGE OF THE STEEL POST.

(4) TOLERANCE FOR TOP OF W-BEAM RAIL IS ± 1".

(13) STEEL OR WOOD POST IS ACCEPTABLE AT POST 1. SEE SDD 14B42

SECTION A-A (13)

POSTS 1-5

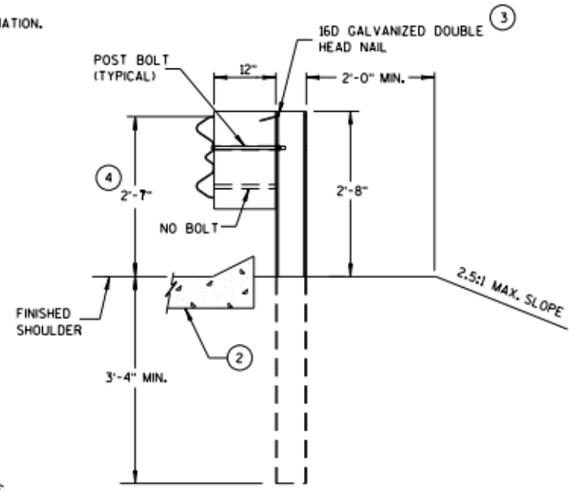

SECTION B-B

POST 6

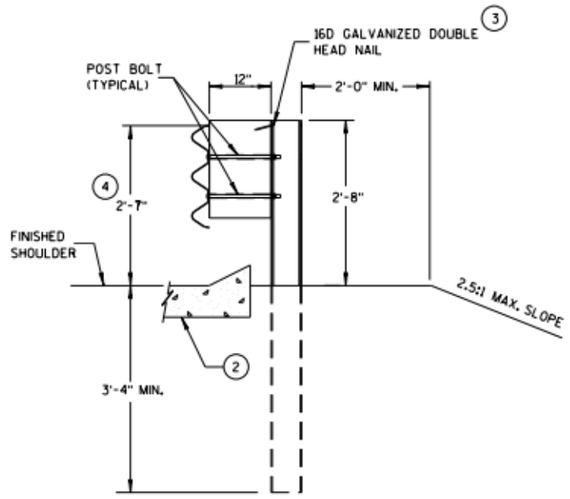

SECTION C-C

POSTS 7-11

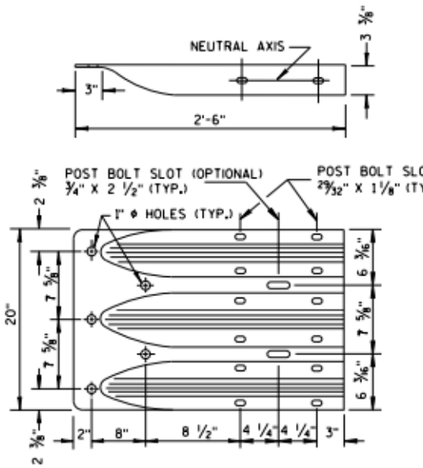

THRIE BEAM TERMINAL CONNECTOR

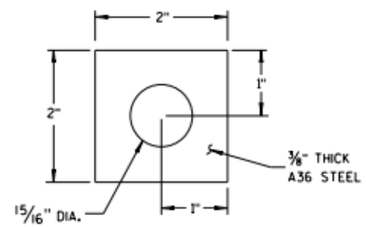

PLATE WASHER DETAIL

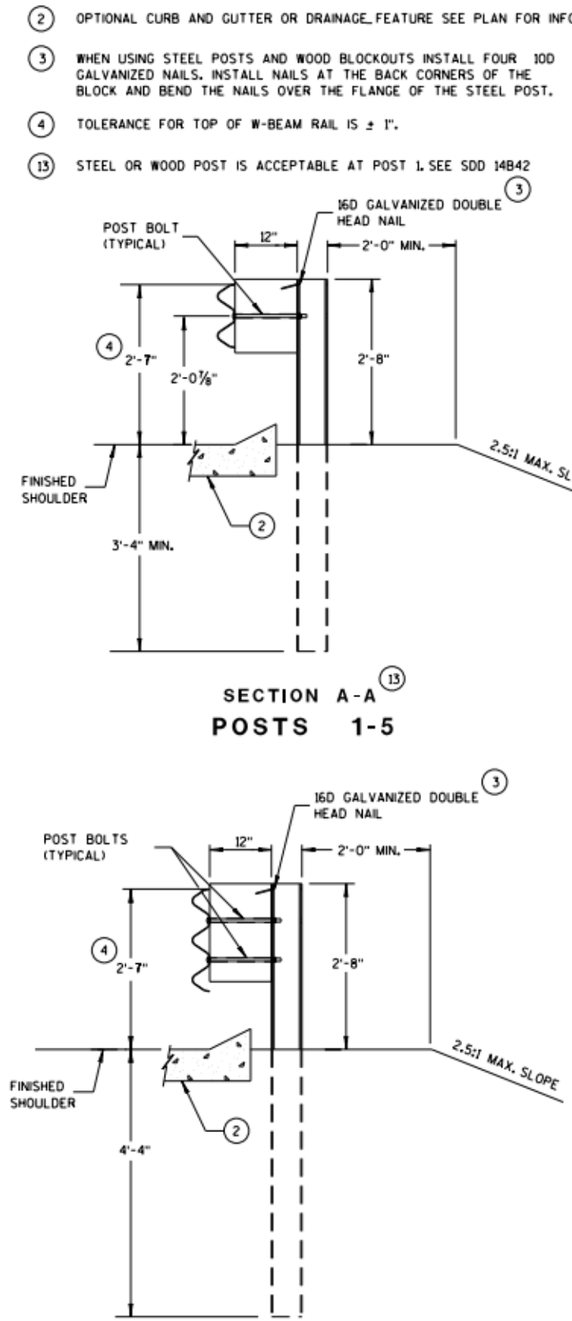

SECTION D-D

POSTS 12-17

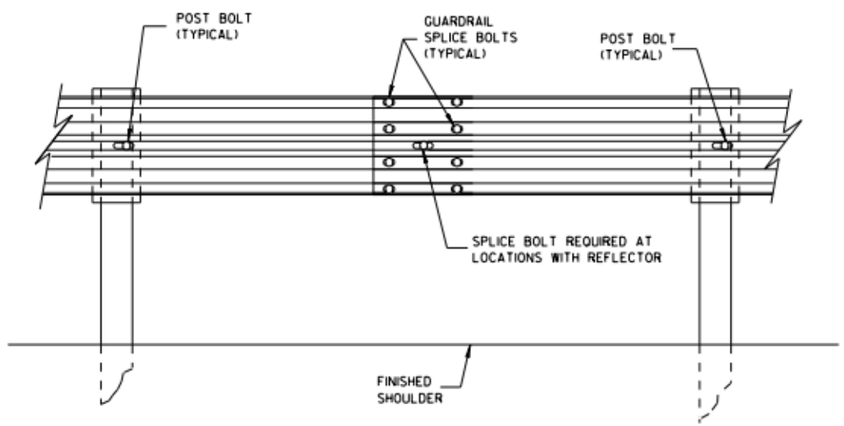

SPLICE DETAIL

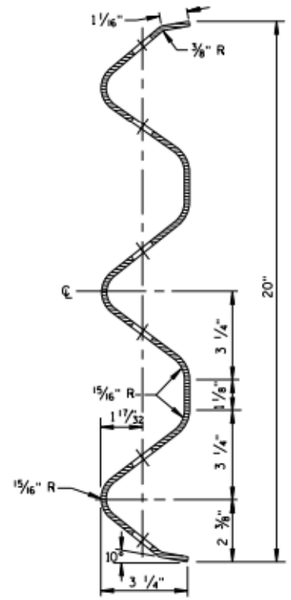

SECTION THRU THRIE BEAM RAIL ELEMENT

MIDWEST GUARDRAIL SYSTEM THRIE BEAM TRANSITION (MGS)

PROJECT NO: RD16-003	HWY: CTH S	COUNTY: KENOSHA	CONSTRUCTION DETAILS	SHEET: 64	E

FILE NAME : _____ PLOT DATE : _____ PLOT BY : _____ PLOT NAME : _____ PLOT SCALE : 1:1

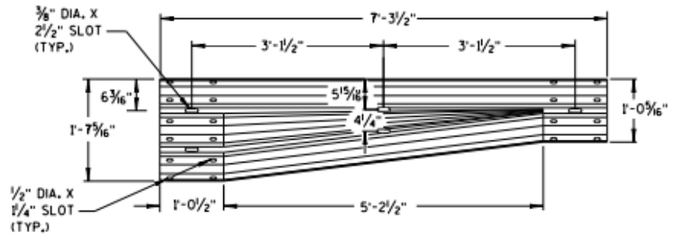

W-BEAM TO THRIE BEAM TRANSITION SECTION

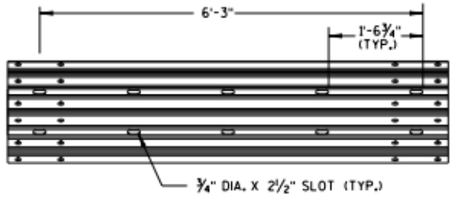

6'-3" THRIE BEAM SECTION

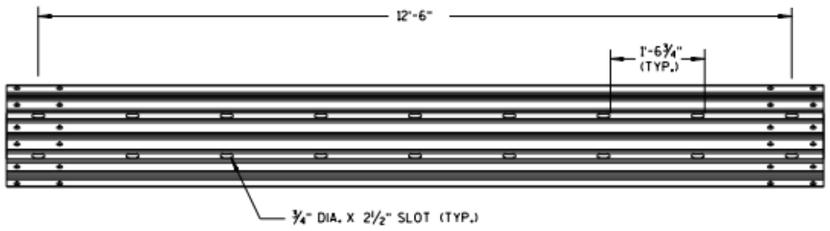

12'-6" THRIE BEAM SECTION

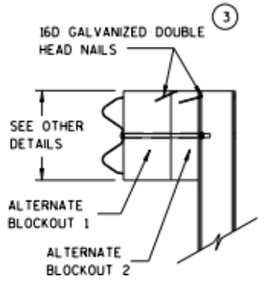

SIDE VIEW

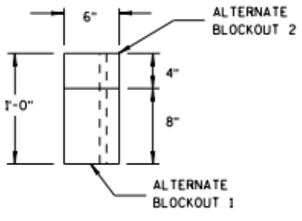

TOP VIEW

ALTERNATE WOOD BLOCKOUT DETAIL

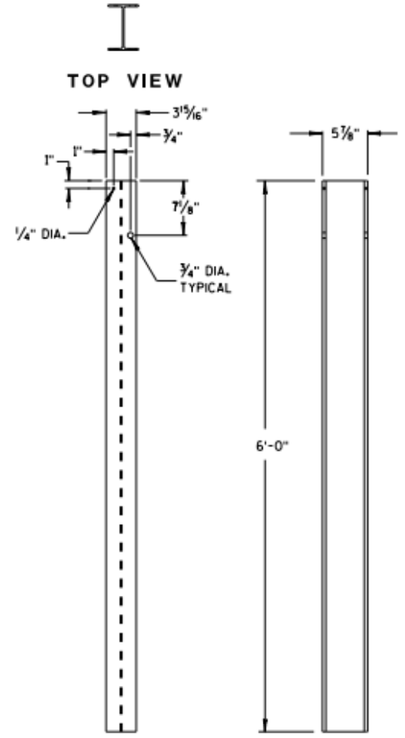

FRONT VIEW SIDE VIEW

STEEL POSTS 1-5 (13)

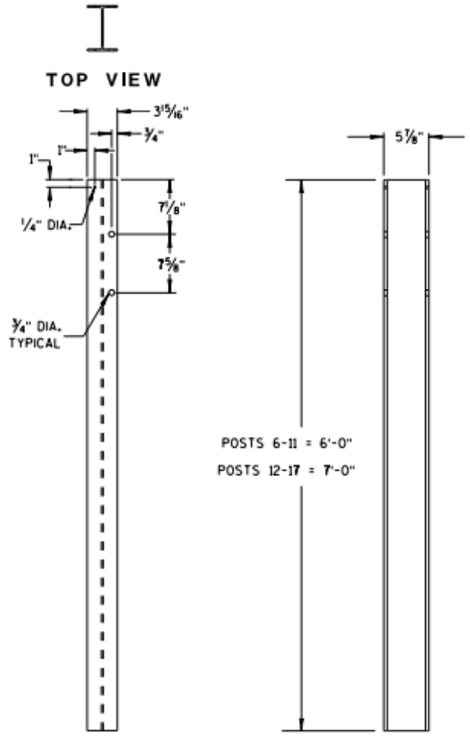

FRONT VIEW SIDE VIEW

STEEL POSTS 6-17

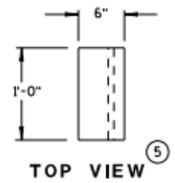

TOP VIEW (5)

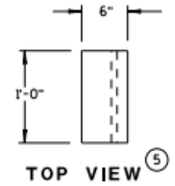

TOP VIEW (5)

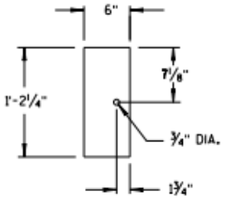

FRONT VIEW

BLOCKOUT POSTS 1-5

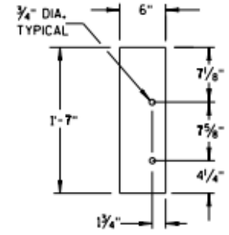

FRONT VIEW

BLOCKOUT POSTS 6-17

GENERAL NOTES

STEEL POSTS ARE W6X9 OR W6X8.5.

BOLT HOLES FOR POST ARE ON FRONT AND OF SIDE OF POST.

(3) WHEN USING STEEL POSTS AND WOOD BLOCKOUTS INSTALL FOUR 16D GALVANIZED NAILS. INSTALL NAILS AT THE BACK CORNERS OF THE BLOCK AND BEND THE NAILS OVER THE FLANGE OF THE STEEL POST.

(5) WOOD BLOCKS MAY BE CONSTRUCTED OUT OF 2 WOOD BLOCKS. SEE ALTERNATE WOOD BLOCK DETAIL.

(13) STEEL OR WOOD POST IS ACCEPTABLE AT POST 1. SEE SDD 14B42.

MIDWEST GUARDRAIL SYSTEM
THRIE BEAM TRANSITION (MGS)

PROJECT NO: RD16-003	HWY: CTH S	COUNTY: KENOSHA	CONSTRUCTION DETAILS	SHEET: 65	E

FILE NAME : _____ PLOT DATE : _____ PLOT BY : _____ PLOT NAME : _____ PLOT SCALE : 1:1

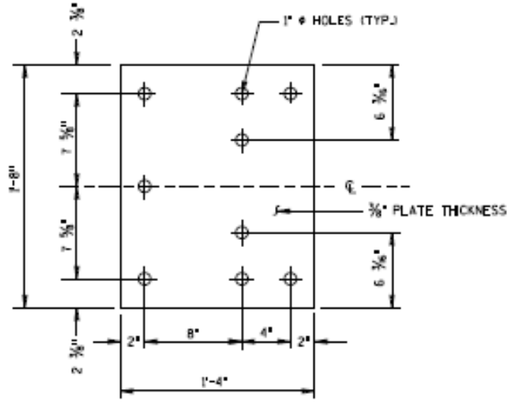

BACK-UP PLATE DETAIL

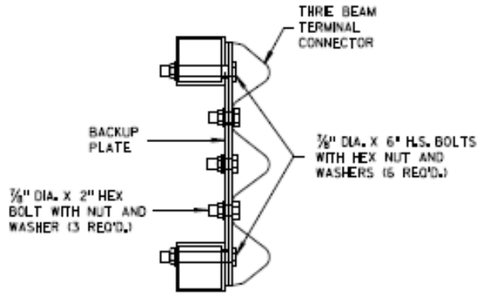

SECTION J-J

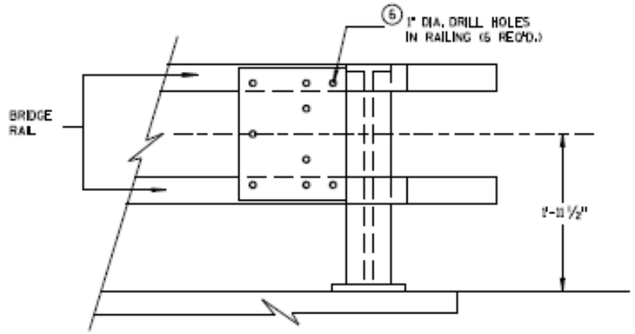

BACK-UP PLATE MOUNTING ONTO BRIDGE RAILING

GENERAL NOTES

4 TOLERANCE FOR TOP OF BEAM IS ± 1".

5 DRILLING HOLES THROUGH THE PARAPET, BOLTS, NUTS, WASHERS AND REPAIRING DAMAGED CONCRETE ARE INCIDENTAL TO THE CONTRACT.

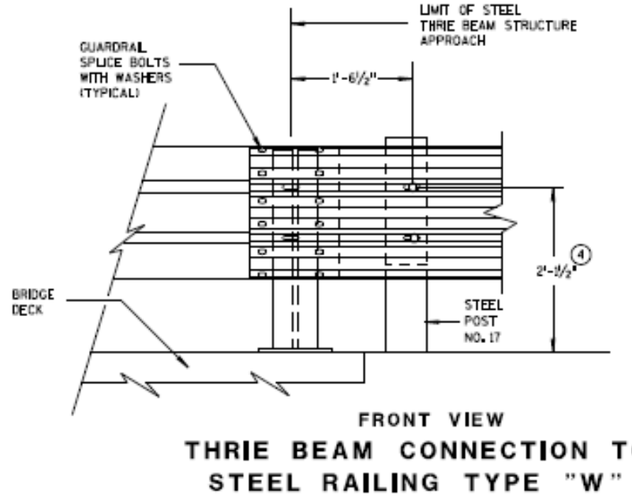

FRONT VIEW

THRIE BEAM CONNECTION TO STEEL RAILING TYPE "W"

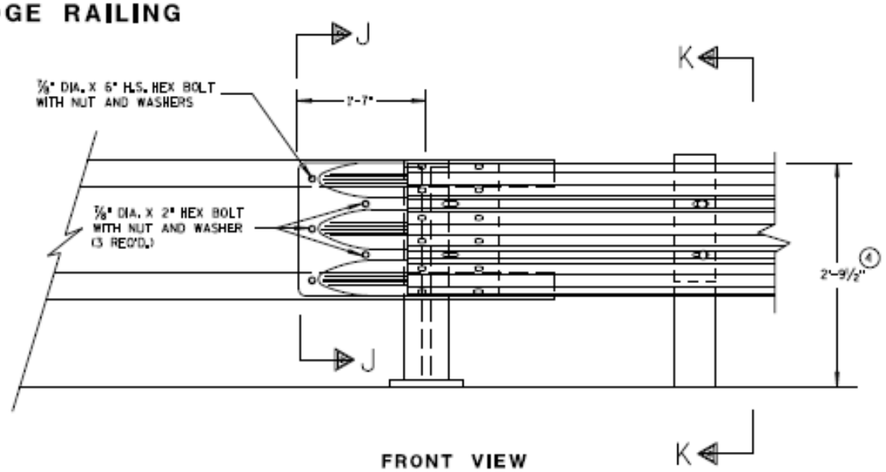

FRONT VIEW

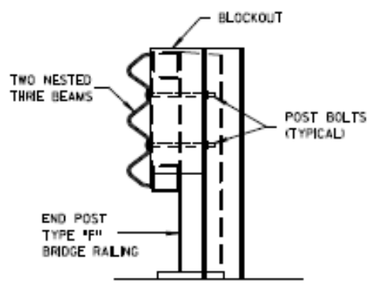

SECTION K-K

THRIE BEAM CONNECTION TO TUBULAR RAILING TYPE "F"

MIDWEST GUARDRAIL SYSTEM
THRIE BEAM TRANSITION (MGS)

PROJECT NO: RD16-003	HWY: CTH S	COUNTY: KENOSHA	CONSTRUCTION DETAILS	SHEET: 66	E

FILE NAME : _____ PLOT DATE : _____ PLOT BY : _____ PLOT NAME : _____ PLOT SCALE : 1:1

2

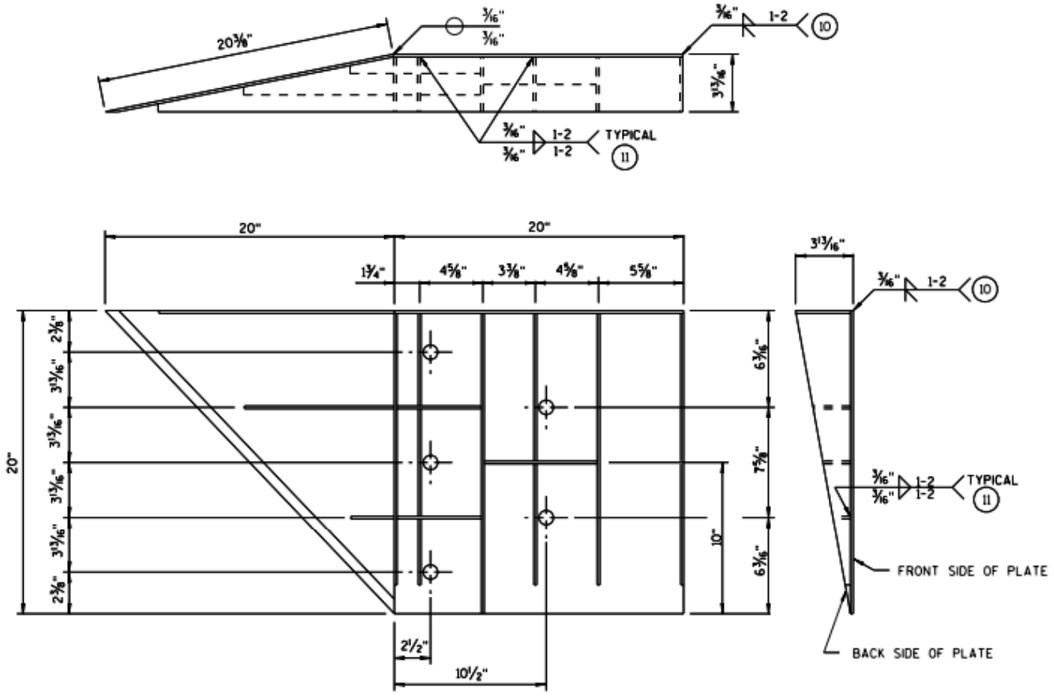

WELDING INSTRUCTION

(VIEWED FROM BACK SIDE OF PLATE)

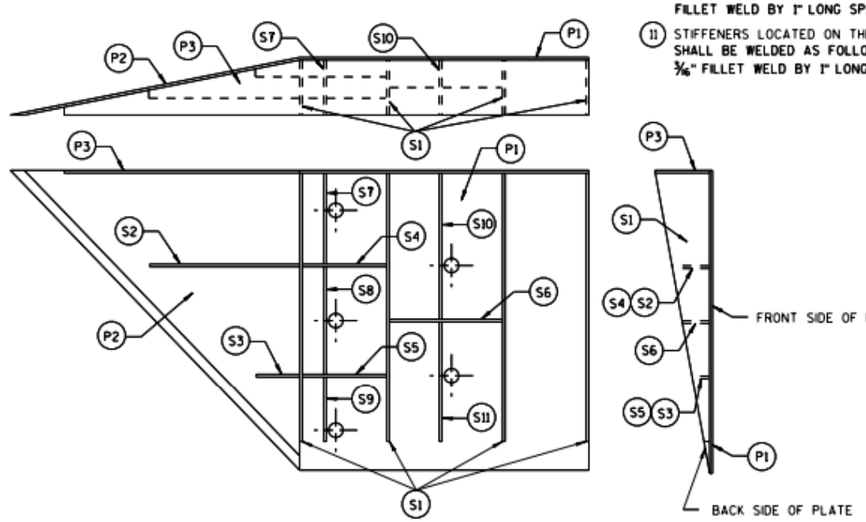

PLATE AND STIFFENER IDENTIFICATION

(VIEWED FROM BACK SIDE OF PLATE)

GENERAL NOTES

COVER PLATE PANELS ARE 3/16" THICK.

ALL STIFFENERS ARE 1/4" THICK.

CONNECTOR PLATE SHALL BE FABRICATED FROM ASTM GRADE A36 STEEL AND GALVANIZED.

FOR GALVANIZED REQUIREMENTS, SEE SECTION 614 OF THE STANDARD SPECIFICATIONS.

ALL HOLE DIAMETERS SHALL BE 1".

FOR OPPOSITE SIDE INSTALLATION MIRROR DRAWINGS.

(10) STIFFENERS LOCATED AT THE OUTSIDE EDGES OF THE COVER PLATES SHALL BE WELDED AS FOLLOWS:
SINGLE BEVEL GROOVE WELD ON EXTERNAL SIDES AND 3/16" FILLET WELD BY 1" LONG SPACED AT 2" ON INTERNAL SIDES.

(11) STIFFENERS LOCATED ON THE INSIDE OF THE COVER PLATE SHALL BE WELDED AS FOLLOWS:
3/16" FILLET WELD BY 1" LONG SPACED AT 2".

CONNECTOR PLATE DIMENSION (PER ASSEMBLY)

PLATE	QUANTITY	SHAPE	SIZE (A x B x C x D)	THICKNESS
P1	1	B	20" x 20"	3/16"
P2	1	B	20" x 20" x 28 3/16"	3/16"
P3	1	B C	39" x 3 3/8" x 20" x 19 5/16"	3/16"
S1	4	B A	18 7/16" x 3 5/8" x 18 3/4"	1/4"
S2	1	B C D	10 1/4" x 2 7/16" x 10 3/8" x 1/2"	1/4"
S3	1	B C D	3" x 1 1/16" x 3 1/8" x 1/2"	1/4"
S4	1	B	6 1/8" x 2 7/16"	1/4"
S5	1	B	6 1/8" x 1 1/16"	1/4"
S6	1	B	7 3/4" x 1 3/4"	1/4"
S7	1	A C	2 9/16" x 6" x 3 3/8" x 5 1/8"	1/4"
S8	1	A C	1 5/32" x 7 1/2" x 2 1/2" x 7 3/8"	1/4"
S9	1	C	6 1/16" x 6 3/16" x 1 3/32"	1/4"
S10	1	A C	1 7/8" x 9 7/8" x 3 5/8" x 9 11/16"	1/4"
S11	1	C	8 1/2" x 8 3/4" x 1 13/16"	1/4"

MIDWEST GUARDRAIL SYSTEM
THRIE BEAM TRANSITION (MGS)

SINGLE SLOPE CONNECTION PLATE

PROJECT NO: RD16-003	HWY: CTH S	COUNTY: KENOSHA	CONSTRUCTION DETAILS	SHEET: 67	E

FILE NAME : _____ PLOT DATE : _____ PLOT BY : _____ PLOT NAME : _____ PLOT SCALE : 1:1

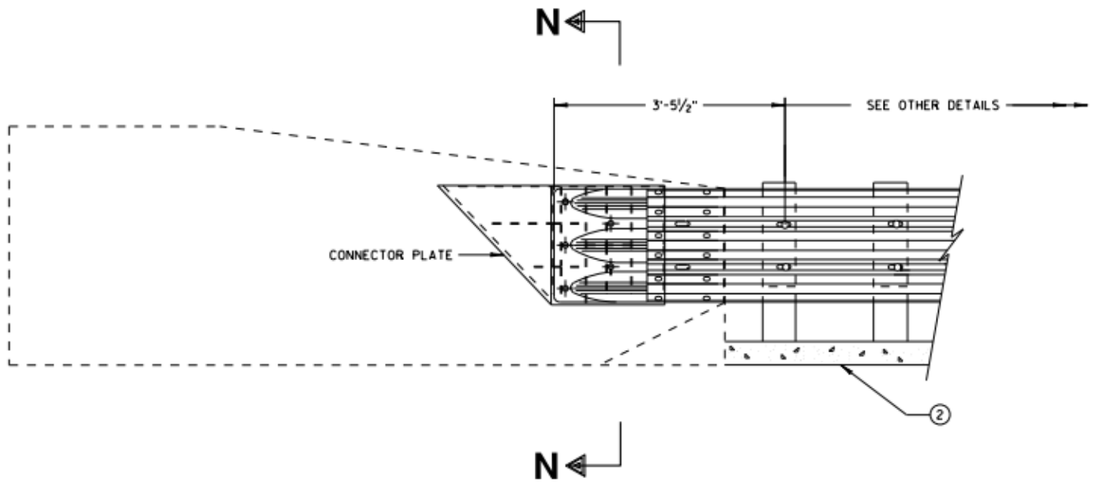

THRIE BEAM CONNECTION TO SINGLE SLOPE BARRIER

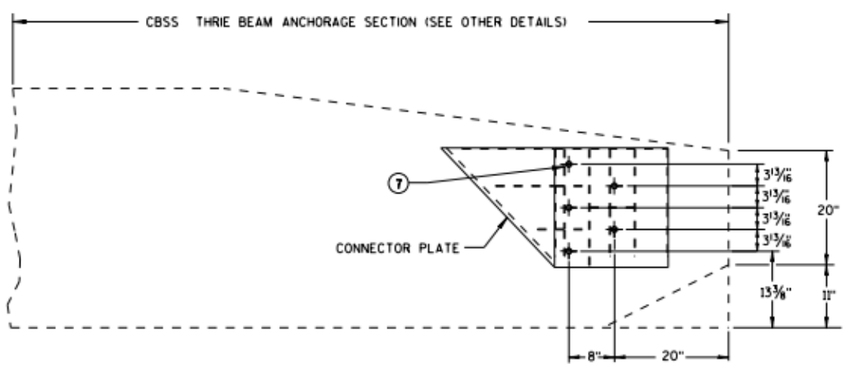

SINGLE SLOPE CONNECTION PLATE PLACEMENT

GENERAL NOTES

CONNECTOR PLATE, DRILLING BOLT HOLES THROUGH THE PARAPET, BOLTS, NUTS, WASHERS AND REPAIRING DAMAGED CONCRETE ARE INCIDENTAL TO THE CONTRACT.

(2) OPTIONAL CURB AND GUTTER OR DRAINAGE FEATURE SEE PLAN FOR INFORMATION.

(7) BOLTS MAY BE A325 BOLTS OR A449 BOLTS. BOLT LENGTH AND THREADING LENGTH ARE TO ALLOW FOR A TIGHT CONNECTION BETWEEN RIGID BARRIER AND THRIE BEAM CONNECTION PLATE. CONTRACTOR IS TO FIELD VERIFY BOLT LENGTH AND THREAD LENGTH. ONE ROUND WASHER REQUIRED BETWEEN BOLT HEAD AND THRIE BEAM CONNECTOR PLATE. BOLTS THAT EXTEND THROUGH THE PARAPET AND OUT THE BACK FACE REQUIRE A HARDENED ROUND STEEL WASHER THAT IS 2" O.D. X 5/8" THICK AND ONE PLATE WASHER. REPAIR ANY DAMAGED CONCRETE FROM BOLT INSTALLATION.

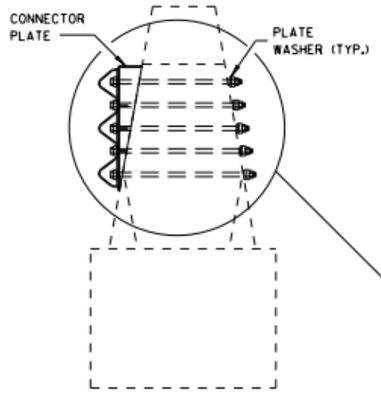

SECTION N-N

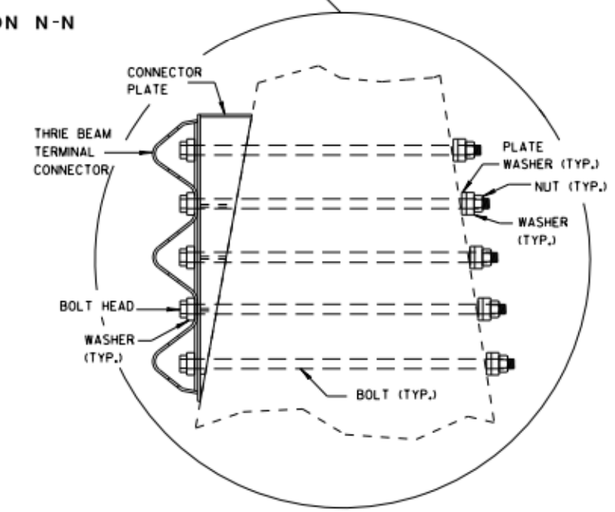

MIDWEST GUARDRAIL SYSTEM
THRIE BEAM TRANSITION (MGS)

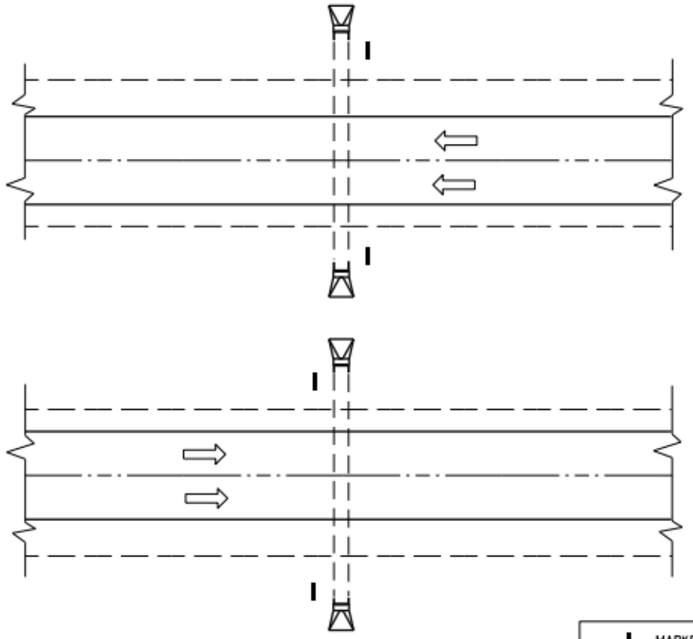

PLAN VIEW

DIVIDED HIGHWAY

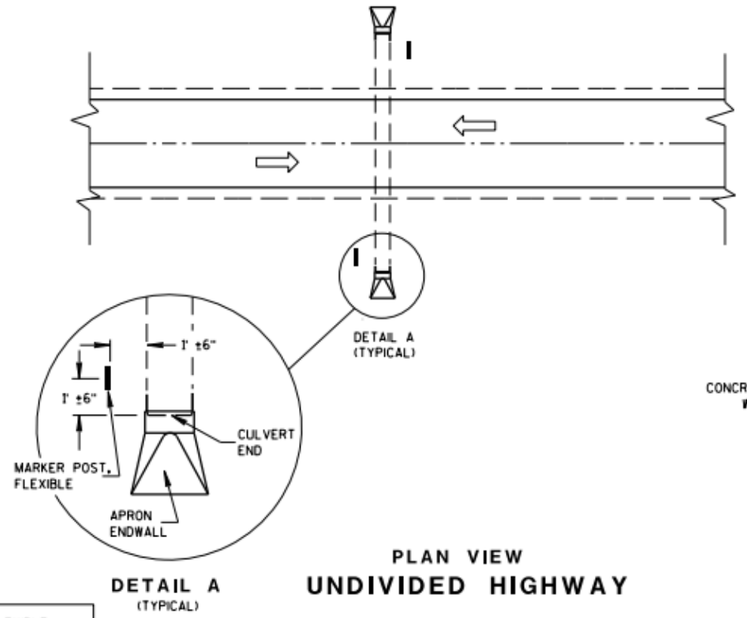

DETAIL A
(TYPICAL)

PLAN VIEW

UNDIVIDED HIGHWAY

MARKER POST, FLEXIBLE

DIRECTION OF TRAFFIC FLOW

GENERAL NOTES

DETAILS OF CONSTRUCTION, MATERIALS AND WORKMANSHIP NOT SHOWN ON THIS DRAWING SHALL CONFORM TO THE PERTINENT REQUIREMENTS OF THE STANDARD SPECIFICATIONS AND THE APPLICABLE SPECIAL PROVISIONS.

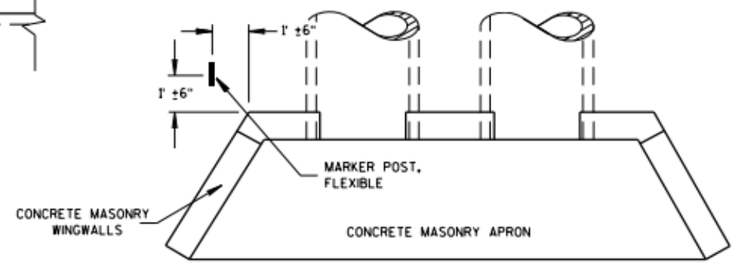

PLAN VIEW

CONCRETE MASONRY ENDWALLS FOR CULVERT PIPE AND PIPE ARCH

FLEXIBLE MARKER POST LOCATION

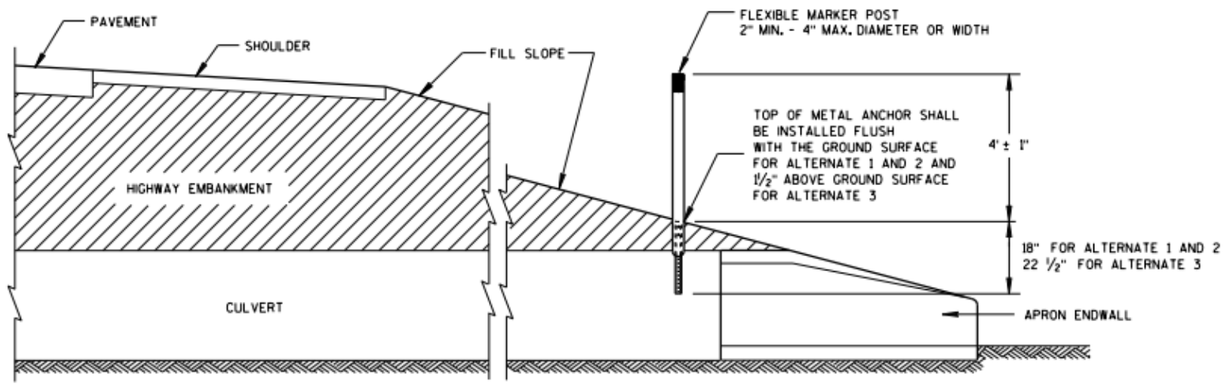

CROSS SECTION

FLEXIBLE MARKER POST

FLEXIBLE MARKER POST FOR CULVERT END

PROJECT NO: RD16-003	HWY: CTH S	COUNTY: KENOSHA	CONSTRUCTION DETAILS	SHEET: 69	E

FILE NAME : _____ PLOT DATE : _____ PLOT BY : _____ PLOT NAME : _____ PLOT SCALE : 1:1

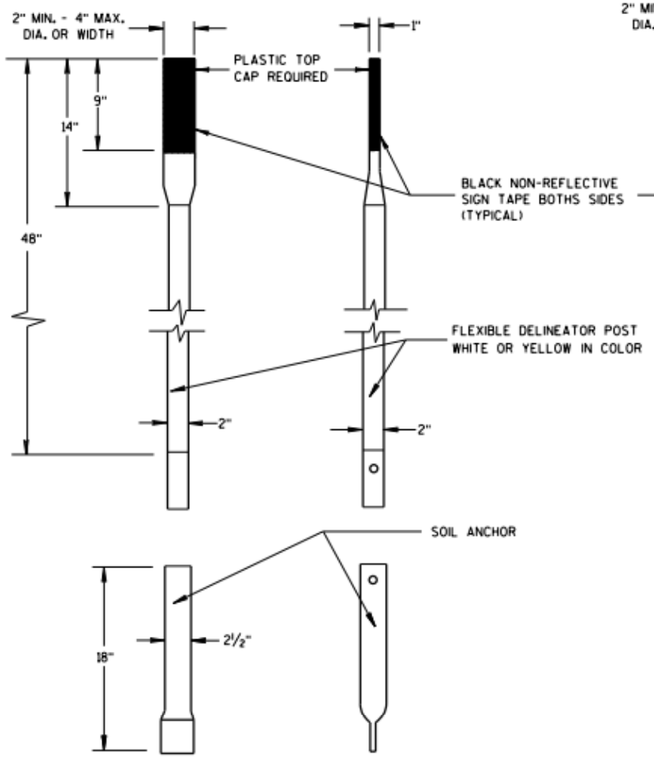

ALTERNATE 1

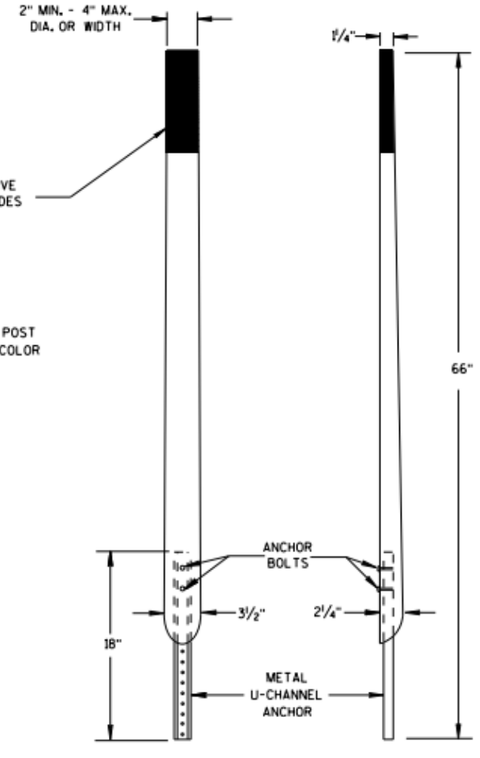

ALTERNATE 2

FLEXIBLE MARKER POSTS

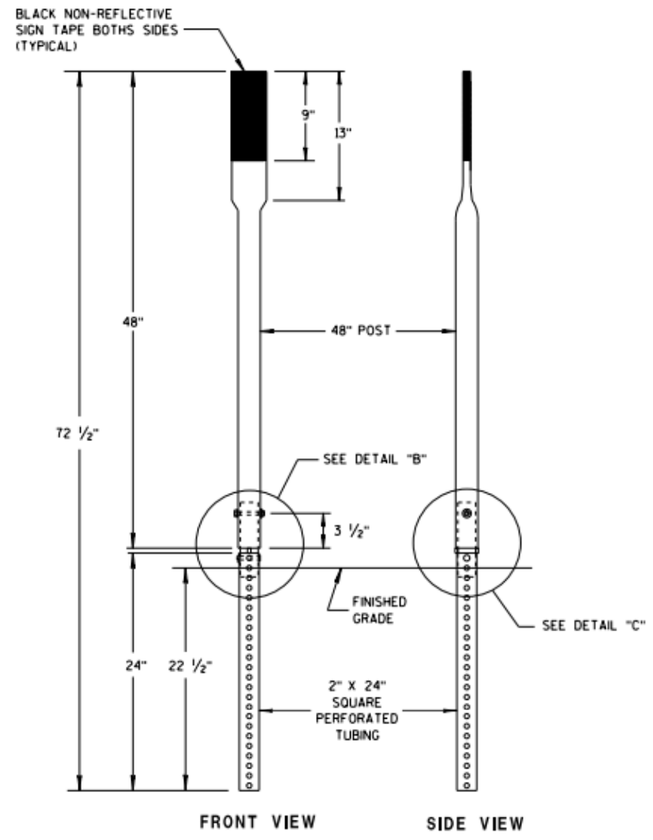

ALTERNATE 3

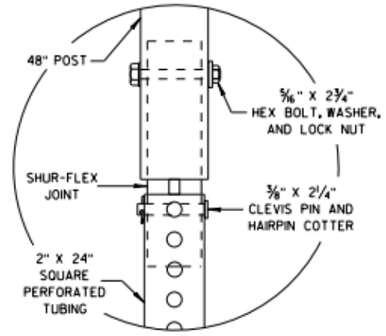

DETAIL B

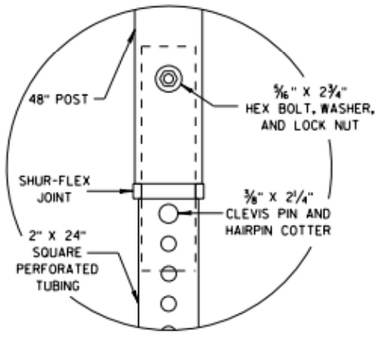

DETAIL C

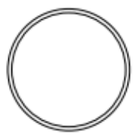

SECTION A-A

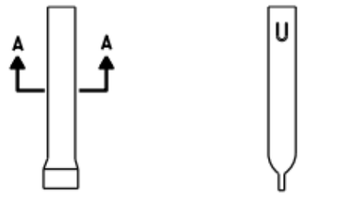

ALTERNATE 1

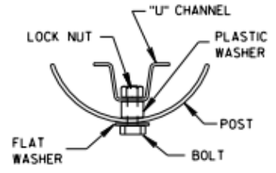

SECTION B-B

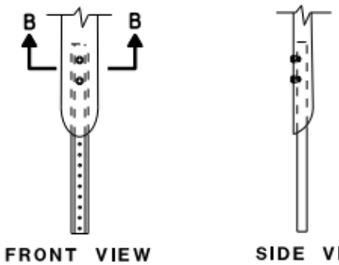

ALTERNATE 2

SECTION C-C

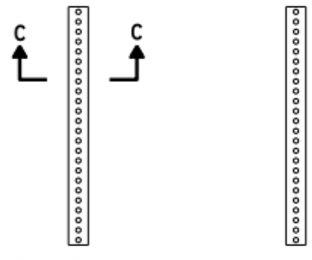

ALTERNATE 3

FLEXIBLE MARKER POST ANCHORS

FLEXIBLE MARKER POST FOR CULVERT END

PROJECT NO: RD16-003	HWY: CTH S	COUNTY: KENOSHA	CONSTRUCTION DETAILS	SHEET: 70	E

FILE NAME : _____ PLOT DATE : _____ PLOT BY : _____ PLOT NAME : _____ PLOT SCALE : 1:1

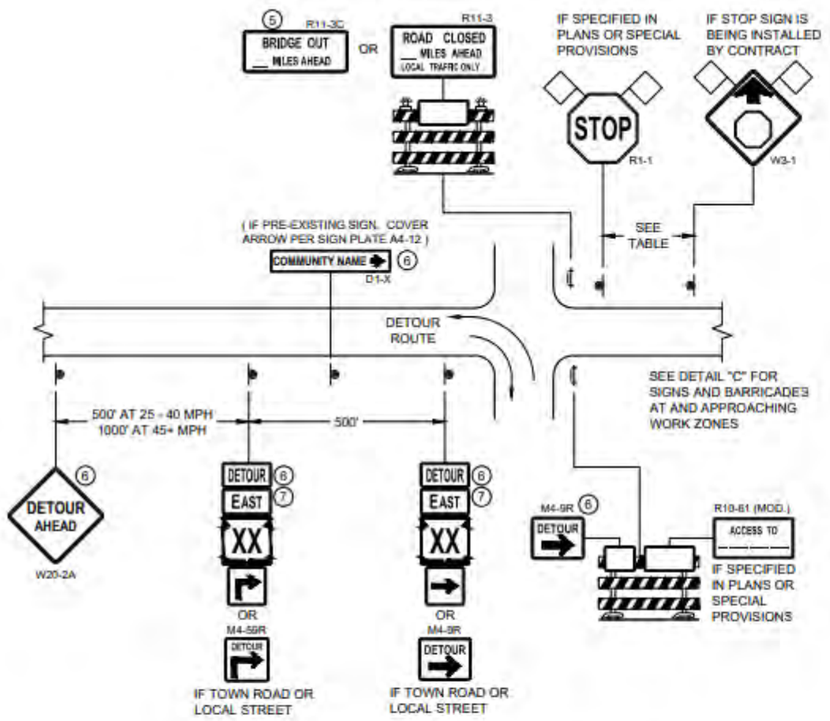

DETAIL A
MAINLINE CLOSURE WITH POSTED DETOUR
WORK ZONE GREATER THAN OR EQUAL TO ½ MILE FROM DETOUR ROUTE (1000 FEET IF URBAN)

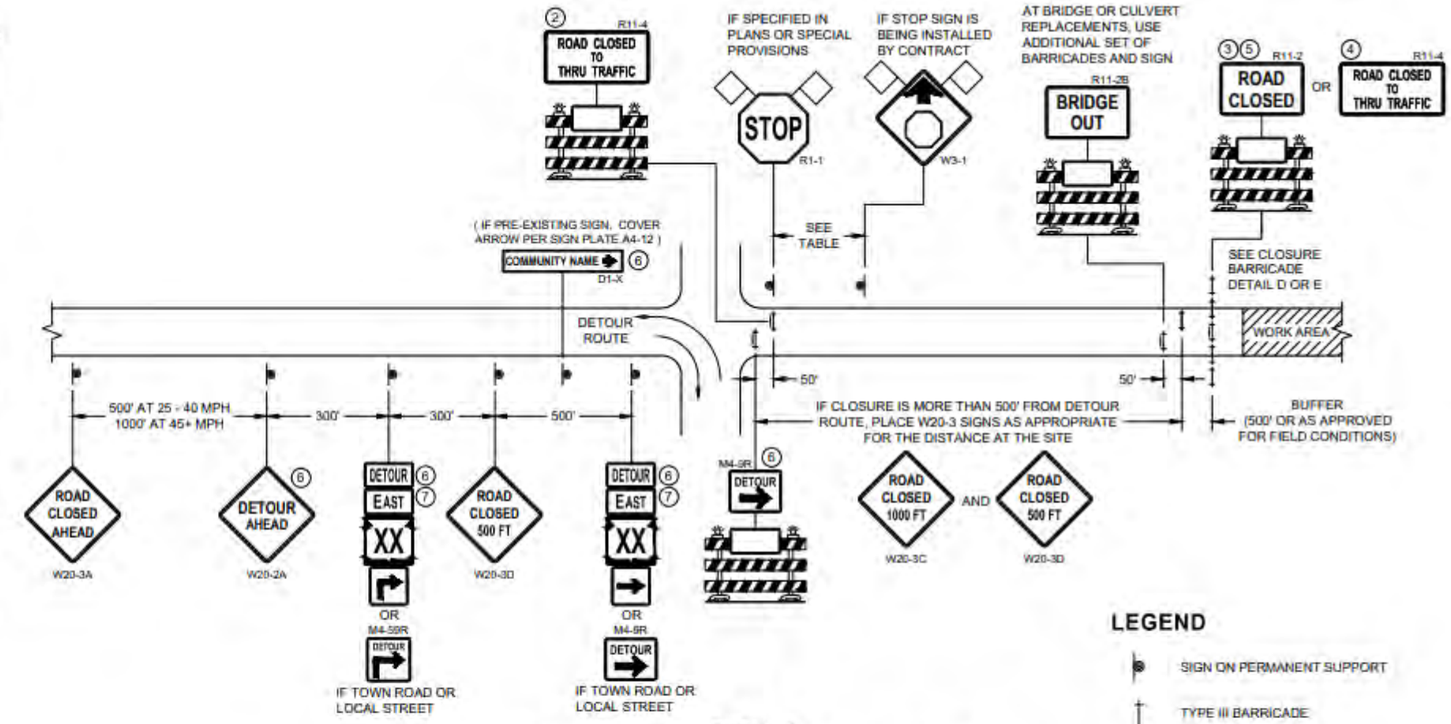

DETAIL B
MAINLINE CLOSURE WITH POSTED DETOUR
WORK ZONE LESS THAN ½ MILE FROM DETOUR ROUTE (1000 FEET IF URBAN)

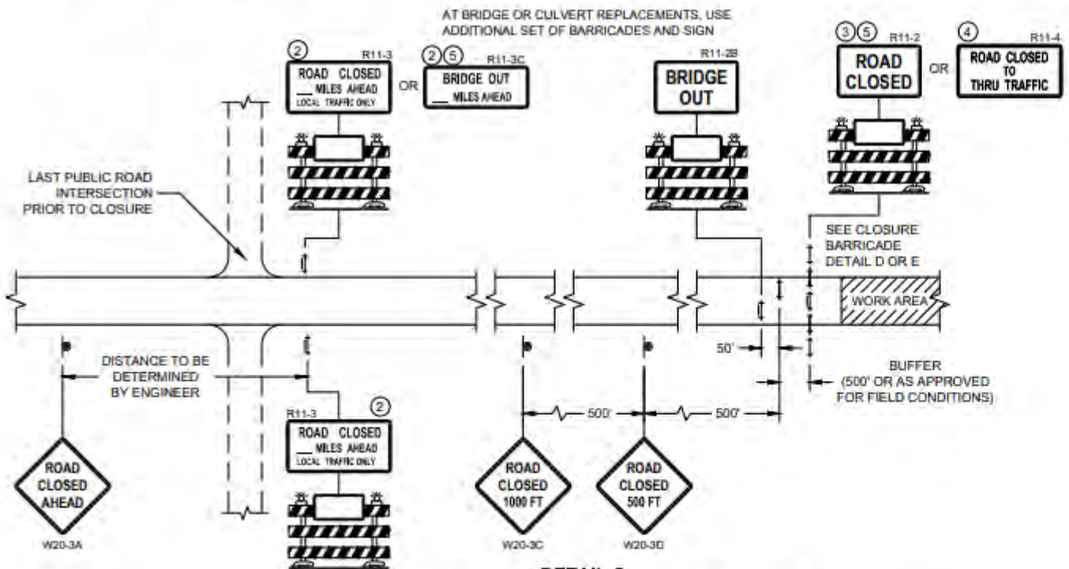

DETAIL C
MAINLINE CLOSURE, NO POSTED DETOUR

SPEED LIMIT (MPH)	"STOP AHEAD" ADVANCE WARNING DISTANCE (FT)
25	200
30	200
35	350
40	350
45	500
50	550
55	750

SEE SDD 15C2-SHEET "b"
FOR GENERAL NOTES
AND FOOTNOTES ① THROUGH ⑦

LEGEND

- SIGN ON PERMANENT SUPPORT
- TYPE III BARRICADE
- TYPE III BARRICADE WITH ATTACHED SIGN
- TYPE "A" WARNING LIGHT (FLASHING)
- WORK AREA
- FLAGS, 16" X 16" MIN. (ORANGE)
- DETOUR M4 - 8
- EAST M3 - X
- XX M1 - 4 OR XX M1 - 6 OR COUNTY X M1 - 5A
- M05 - 1 OR M06 - 1

BARRICADES AND SIGNS FOR MAINLINE CLOSURES

PROJECT NO: RD16-003	HWY: CTH S	COUNTY: KENOSHA	CONSTRUCTION DETAILS	SHEET: 71	E

FILE NAME : _____ PLOT DATE : _____ PLOT BY : _____ PLOT NAME : _____ PLOT SCALE : 1:1

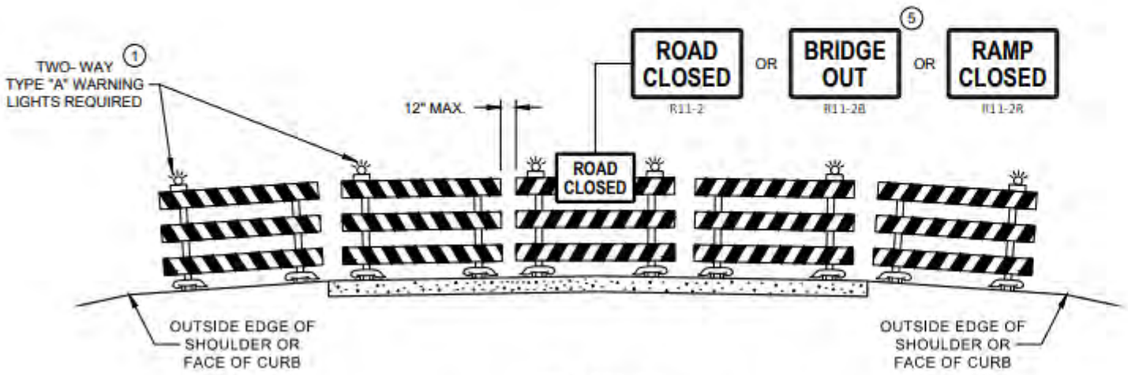

DETAIL D
ROAD CLOSURE BARRICADE DETAIL
APPROACH VIEW

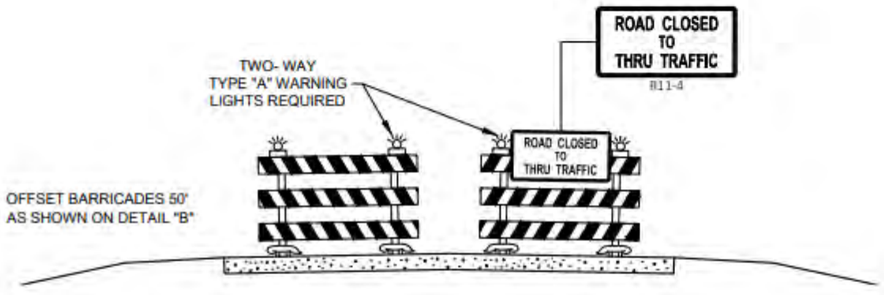

DETAIL E
LANE CLOSURE BARRICADE DETAIL
APPROACH VIEW

SEE SDD 15C2 - SHEET "a" FOR LEGEND

GENERAL NOTES

THE EXACT NUMBER, LOCATION, AND SPACING OF ALL SIGNS AND BARRICADES SHALL BE ADJUSTED TO FIT FIELD CONDITIONS AS APPROVED BY THE ENGINEER.

ANY SIGNS TEMPORARY OR EXISTING, WHICH CONFLICT WITH TRAFFIC CONTROL "IN USE", SHALL BE REMOVED OR COVERED AS NEEDED AND AS APPROVED BY THE ENGINEER.

THE SPACING BETWEEN TRAFFIC CONTROL SIGNS SHOULD BE ADJUSTED TO NOT CONFLICT WITH AND SHOULD PROVIDE A DESIRABLE MINIMUM OF 200 FEET CLEARANCE TO EXISTING SIGNS THAT WILL REMAIN IN PLACE.

BARRICADES THAT MUST BE MOVED FOR A WORK OPERATION SHALL BE IMMEDIATELY RE-ESTABLISHED UPON COMPLETION OF THE OPERATION, OR FOR CONTINUING OPERATIONS, AT THE END OF EACH WORKING DAY.

SIGNS THAT WILL BE IN PLACE LESS THAN 7 CONTINUOUS DAYS AND NIGHTS MAY BE MOUNTED ON PORTABLE SUPPORTS.

ALL TYPE III BARRICADES SHALL HAVE RAILS REFLECTORIZED ON BOTH FACES. STRIPES SHALL BE PROPERLY SLOPED DOWN TOWARD THE TRAFFIC SIDE OR AS SHOWN IN THE ROAD CLOSURE BARRICADE DETAIL "D" FOR FULL ROAD CLOSURES.

TYPE "A" LOW - INTENSITY FLASHING WARNING LIGHTS SHALL BE VISIBLE ON BOTH SIDES OF THE BARRICADE.

THE R11 - 2, R11 - 3, M4 - 9, R11 - 4, AND R10 - 61 SIGNS PLACED ON THE BARRICADES SHALL COVER NO MORE THAN THE TOP RAIL. THE SIGNS SHALL NOT COVER ANY PORTION OF THE MIDDLE RAIL OR BOTTOM RAILS.

"WO" AND "MO" SIGNS ARE THE SAME AS "W" AND "M" SIGNS EXCEPT THE BACKGROUND IS ORANGE.

ALL SIGNS SHALL BE 48" X 48" UNLESS OTHERWISE NOTED BELOW:
- R11 - 2 SHALL BE 48" X 30"
- R11 - 3 SHALL, R11 - 4 AND R10 - 61 SHALL BE 60 " X 30"
- M4 - 9 SHALL BE 30" X 24"
- M3 - X SHALL BE 24" X 12" (36" X 18" IF NEEDED TO MATCH EXISTING SIGNS)
- M4 - 8 SHALL BE 24" X 12" (36" X 18" IF NEEDED TO MATCH EXISTING SIGNS)
- M1 - 4, M1 - 5A AND M1 - 6 SHALL BE 24" X 24" (36" X 36" IF NEEDED TO MATCH EXISTING SIGNS)
- MO5 - 1 AND MO6 - 1 SHALL BE 21" X 21" (30" X 30" IF NEEDED TO MATCH EXISTING SIGNS)
- D1 - X SHALL BE AS SHOWN ON SPECIFIC PROJECT SIGNING DETAIL SHEETS.
- R1 - 1 SHALL BE 36" X 36"

(1) TWO WARNING LIGHTS SHALL BE PROVIDED ON THE CENTER BARRICADE AND A MINIMUM OF ONE WARNING LIGHT SHALL BE PROVIDED ON EACH OF THE OTHER BARRICADES WITHIN THE ROADWAY LIMITS. SPACING OF THE WARNING LIGHTS SHALL BE UNIFORM TO THE EDGE OF ROADWAY AS SHOWN (APPROX. 8 FOOT LIGHT SPACING.

(2) THESE SIGNS AND BARRICADES ARE NOT REQUIRED IF ROAD CLOSURE BEGINS AT AN INTERSECTION.

(3) FOR ROAD CLOSURE WITHOUT LOCAL ACCESS TO PROJECT, SEE ROAD CLOSURE BARRICADE DETAIL "D".

(4) FOR ROAD CLOSURE WITH LOCAL ACCESS TO PROJECT, SEE ROAD CLOSURE BARRICADE DETAIL "E".

(5) FOR BRIDGE OR CULVERT REPLACEMENTS, SUBSTITUTE "BRIDGE OUT" INSTEAD OF "ROAD CLOSED" ON R11 - 2 AND R11 - 3 SIGNS.

(6) INSTALL DETOUR AND COMMUNITY GUIDE SIGNS AND ARROWS ONLY IF SPECIFIED IN THE CONTRACT. IF THERE ARE EXISTING ROUTE MARKER ASSEMBLIES THAT WILL REMAIN IN PLACE, ADJUST THE LOCATION OF THE DETOUR ROUTE SIGNS TO CORRESPOND WITH THE EXISTING ASSEMBLIES. MODIFY EXISTING SIGNS WHERE POSSIBLE. SEE SPECIFIC PROJECT DETOUR SIGNING DETAIL SHEETS. IF DETOUR SIGNS ARE BEING INSTALLED BY OTHERS, PLACE THE CONTRACTED TRAFFIC CONTROL SIGNS TO ALLOW FOR PLACEMENT OF ALL WARNING, DETOUR AND GUIDE SIGNS AS SHOWN.

(7) "EAST" CARDINAL DIRECTION MARKERS AND RIGHT TURN ARROWS ARE SHOWN. USE OTHER CARDINAL DIRECTIONS AND ARROWS AS APPROPRIATE.

BARRICADES AND SIGNS FOR VARIOUS CLOSURES

2

THIS DRAWING PROVIDES GENERAL GUIDANCE ON TYPICAL DETOUR SIGN LAYOUT AND SPACING. SEE PROJECT DETOUR SIGNING SHEETS FOR SPECIFIC DETAILS FOR EACH PROJECT.

LEGEND

- SIGN ON PERMANENT SUPPORT
- WORK AREA
- DETOUR — M4 - 8
- EAST — M3 - X
- XX — M1 - 4 OR XX — M1 - 6 OR COUNTY X — M1 - 5A
- M05 - 1 OR M06 - 1 OR M06 - 1

GENERAL NOTES

THE EXACT NUMBER, LOCATION AND SPACING OF ALL SIGNS SHALL BE ADJUSTED TO FIT FIELD CONDITIONS AS APPROVED BY THE ENGINEER.

IF THERE ARE EXISTING ROUTE MARKER ASSEMBLIES THAT WILL REMAIN IN PLACE, ADJUST THE LOCATION OF THE DETOUR ROUTE SIGNS TO CORRESPOND WITH THE EXISTING ASSEMBLIES. SEE SPECIFIC PROJECT DETOUR SIGNING DETAIL SHEETS. MODIFY EXISTING SIGNS WHERE POSSIBLE.

THE SPACING BETWEEN TRAFFIC CONTROL AND DETOUR SIGNS SHOULD BE ADJUSTED TO NOT CONFLICT WITH AND TO PROVIDE A DESIRABLE MINIMUM OF 200 FEET CLEARANCE TO EXISTING SIGNS THAT WILL REMAIN IN PLACE.

ANY SIGNS TEMPORARY OR EXISTING, WHICH CONFLICT WITH TRAFFIC CONTROL "IN USE" SHALL BE REMOVED OR COVERED AS NEEDED AND AS APPROVED BY THE ENGINEER.

SIGNS THAT WILL BE IN PLACE LESS THAN 7 CONTINUOUS DAYS AND NIGHTS MAY BE MOUNTED ON PORTABLE SUPPORTS.

"MO" SIGNS ARE THE SAME AS "M" SIGNS EXCEPT THE BACKGROUND IS ORANGE.

SIGN SIZES SHALL BE AS FOLLOWS:

M3-X SHALL BE 24" X 12" (36" X 18" IF NEEDED TO MATCH EXISTING SIGNS)
M4-8 SHALL BE 24" X 12" (30" X 15" IF NEEDED TO MATCH EXISTING SIGNS)
M1-4, M1-5A AND M1-6 SHALL BE 24" X 24" (30" X 30" IF NEEDED TO MATCH EXISTING SIGNS)
M05-1 AND M06-1 SHALL BE 21" X 21" (30" X 30" IF NEEDED TO MATCH EXISTING SIGNS)
M4-9 AND M4-59 SHALL BE 30" X 24"
M4-8a SHALL BE 24" X 18"
G20-51 SHALL BE 60" X 24"
W20-2 SHALL BE 48" X 48"
D1-X SHALL BE AS SHOWN ON SPECIFIC PROJECT SIGNING DETAIL SHEETS.

* OPTIONAL SIGNS. SEE SPECIFIC PROJECT DETOUR SIGNING DETAIL SHEETS.

** FOR A TOWN ROAD OR LOCAL STREET DETOURED ONTO A STATE TRUNK HIGHWAY, PLACE A ROAD NAME PLAQUE ABOVE THE M4-9 SIGN AS SPECIFIED IN THE CONTRACT.

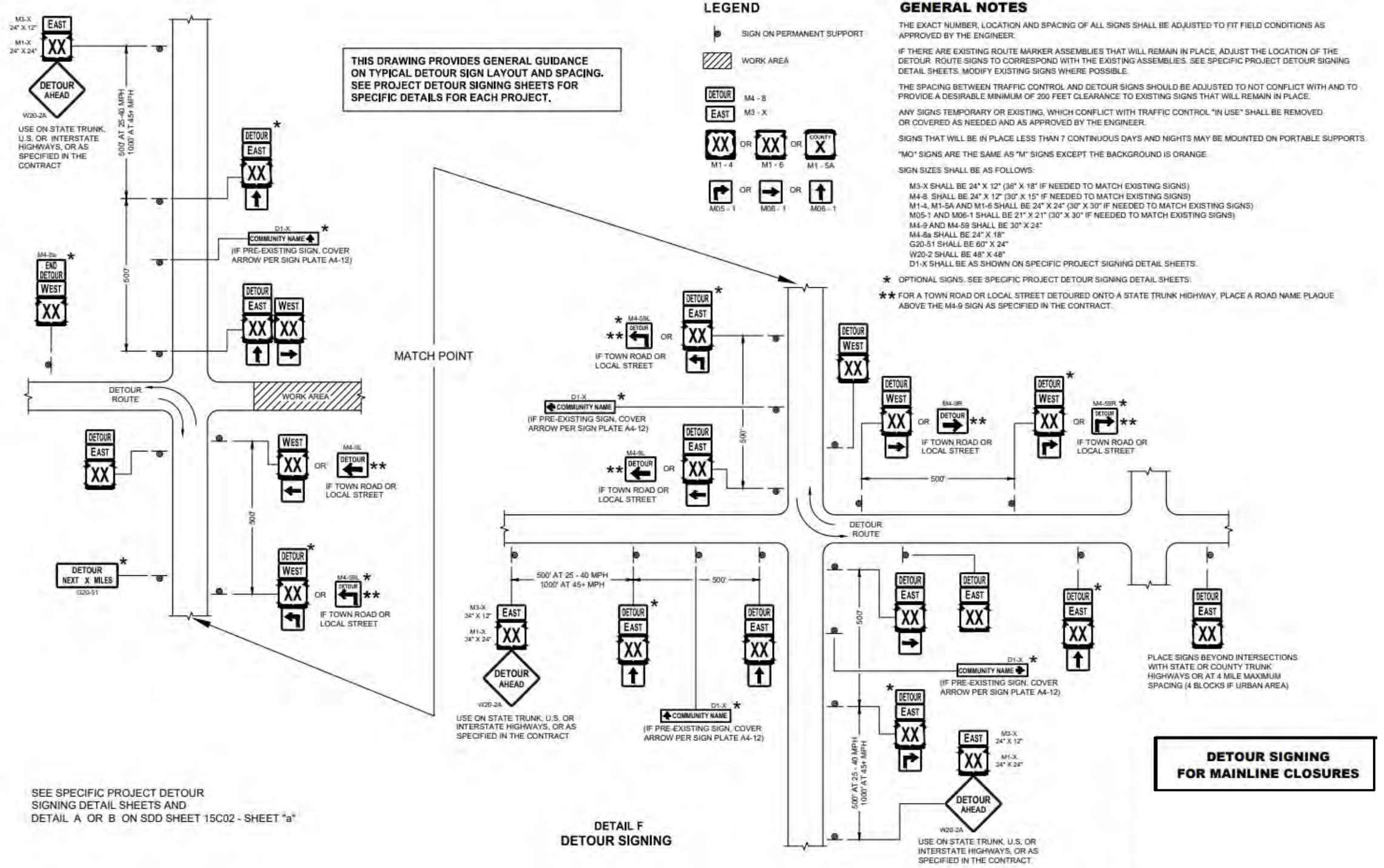

SEE SPECIFIC PROJECT DETOUR SIGNING DETAIL SHEETS AND DETAIL A OR B ON SDD SHEET 15C02 - SHEET "a"

DETAIL F
DETOUR SIGNING

DETOUR SIGNING FOR MAINLINE CLOSURES

PROJECT NO: RD16-003	HWY: CTH S	COUNTY: KENOSHA	CONSTRUCTION DETAILS	SHEET: 73	E

FILE NAME : _____ PLOT DATE : _____ PLOT BY : _____ PLOT NAME : _____ PLOT SCALE : 1:1

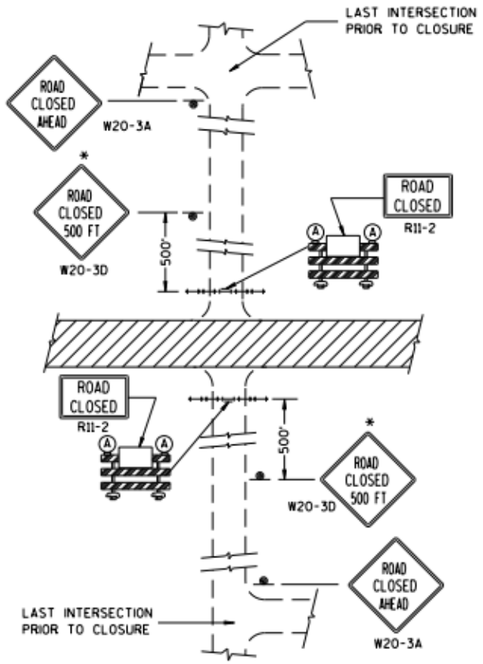

DETAIL 1

(NO ACCESS TO PROJECT)

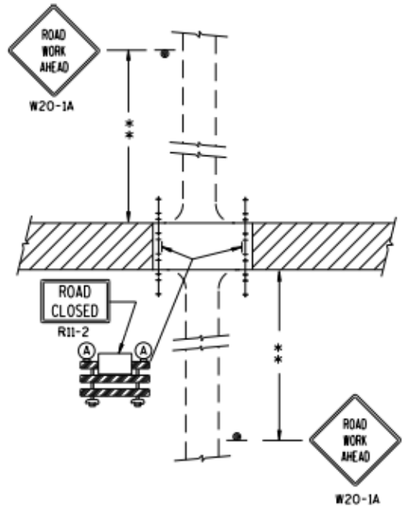

DETAIL 2

(PUBLIC CROSS-TRAFFIC MAINTAINED.
NO ACCESS TO PROJECT).

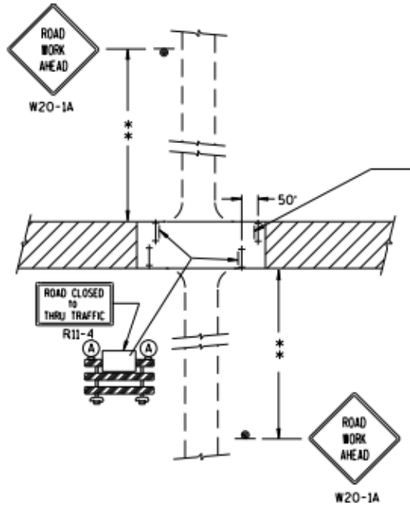

DETAIL 3

(PUBLIC CROSS-TRAFFIC MAINTAINED. CONTRACTOR, LOCAL BUSINESS AND RESIDENT ACCESS).

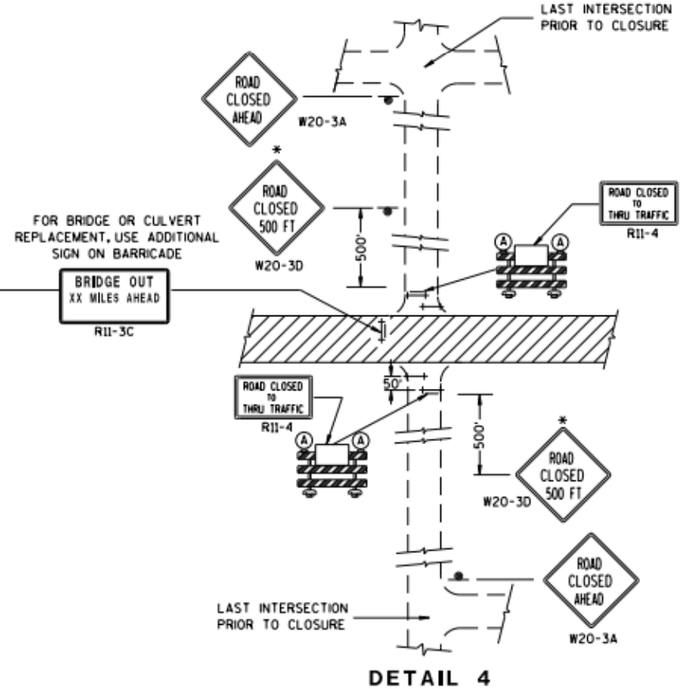

DETAIL 4

(CONTRACTOR, LOCAL BUSINESS AND
RESIDENT ACCESS TO PROJECT)

GENERAL NOTES

THE EXACT NUMBER, LOCATION, AND SPACING OF ALL SIGNS AND BARRICADES SHALL BE ADJUSTED TO FIT FIELD CONDITIONS AS APPROVED BY THE ENGINEER.

ANY SIGNS TEMPORARY OR EXISTING, WHICH CONFLICT WITH TRAFFIC CONTROL "IN USE" SHALL BE REMOVED OR COVERED AS NEEDED AND AS APPROVED BY THE ENGINEER.

THE SPACING BETWEEN TRAFFIC CONTROL SIGNS SHOULD BE ADJUSTED TO NOT CONFLICT WITH AND SHOULD PROVIDE A DESIRABLE MINIMUM OF 200 FEET CLEARANCE TO EXISTING SIGNS THAT WILL REMAIN IN PLACE.

IF A "STOP" SIGN MUST BE REMOVED FOR A WORK OPERATION, A TEMPORARY "STOP" SIGN SHALL BE PLACED PRIOR TO THE SIGN REMOVAL, OR A FLAGGER SHALL BE PROVIDED UNTIL THE SIGN IS RE-ESTABLISHED.

BARRICADES THAT MUST BE MOVED FOR A WORK OPERATION SHALL BE IMMEDIATELY RE-ESTABLISHED UPON COMPLETION OF THE OPERATION OR, FOR CONTINUING OPERATIONS, AT THE END OF EACH WORKING DAY.

SIGNS THAT WILL BE IN PLACE LESS THAN **7** CONTINUOUS DAYS AND NIGHTS MAY BE MOUNTED ON PORTABLE SUPPORTS.

ALL TYPE III BARRICADES SHALL HAVE RAILS REFLECTORIZED ON BOTH FACES. STRIPES SHALL BE PROPERLY SLOPED DOWN TOWARD THE TRAFFIC SIDE OR AS SHOWN IN THE ROAD CLOSURE BARRICADE DETAIL D FOR FULL ROAD CLOSURES.

TYPE "A" LOW-INTENSITY FLASHING WARNING LIGHTS SHALL BE VISIBLE ON BOTH SIDES OF THE BARRICADE.

THE R11-2, R11-3 AND R11-4 SIGNS PLACED ON BARRICADES SHALL COVER NO MORE THAN THE TOP RAIL. THE SIGNS SHALL NOT COVER ANY PORTION OF THE MIDDLE OR BOTTOM RAILS.

ALL SIGNS SHALL BE 48" X 48" UNLESS OTHERWISE NOTED BELOW:
R11-2 SHALL BE 48" X 30".
R11-4 AND R11-3 SHALL BE 60" X 30".

*OMIT THE "ROAD CLOSED 500 FT." SIGN IF THE LAST INTERSECTION IS 500 FT. OR LESS FROM THE WORK ZONE.

**500' MAX. OR AT LAST INTERSECTION WHICHEVER IS CLOSER.

LEGEND

- SIGN ON PERMANENT SUPPORT
- TYPE III BARRICADE
- TYPE III BARRICADE WITH ATTACHED SIGN
- (A) TYPE "A" WARNING LIGHT (FLASHING)
- WORK AREA

BARRICADES AND SIGNS FOR SIDEROAD CLOSURES

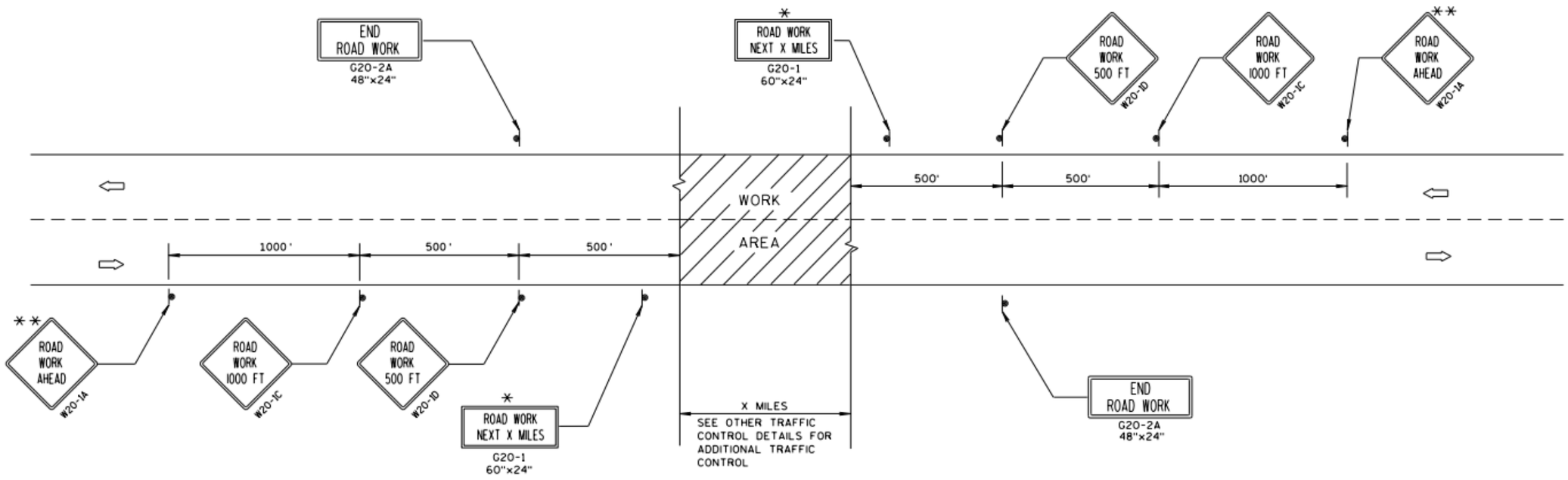

TYPICAL SIDEROAD APPROACH WARNING SIGN DETAIL

GENERAL NOTES

THE EXACT NUMBER, LOCATION, AND SPACING OF ALL SIGNS AND DEVICES SHALL BE ADJUSTED TO FIT FIELD CONDITIONS.

THE SPACING BETWEEN TRAFFIC CONTROL SIGNS SHOULD BE ADJUSTED TO NOT CONFLICT WITH AND SHOULD PROVIDE A MINIMUM OF 200 FEET (500 FEET DESIRABLE) CLEARANCE TO EXISTING SIGNS THAT WILL REMAIN IN PLACE.

ALL SIGNS ARE 48"x48" UNLESS OTHERWISE NOTED.

SIGNS THAT WILL BE IN PLACE LESS THAN **7** CONTINUOUS DAYS AND NIGHTS MAY BE MOUNTED ON PORTABLE SUPPORTS.

IF A "STOP" SIGN MUST BE REMOVED FOR A WORK OPERATION, A TEMPORARY "STOP" SIGN SHALL BE PLACED PRIOR TO THE SIGN REMOVAL, OR A FLAGGER SHALL BE PROVIDED UNTIL THE SIGN IS RE-ESTABLISHED.

* OMIT G20-1 SIGNS IF LENGTH OF WORK AREA IS 2 MILES OR LESS.

** PLACE ADDITIONAL W20-1A "ROAD WORK AHEAD" SIGN IF WORK AREA WITHIN THE PROJECT IS SEPARATED BY MORE THAN 2 MILES FROM PREVIOUS WORK AREA.

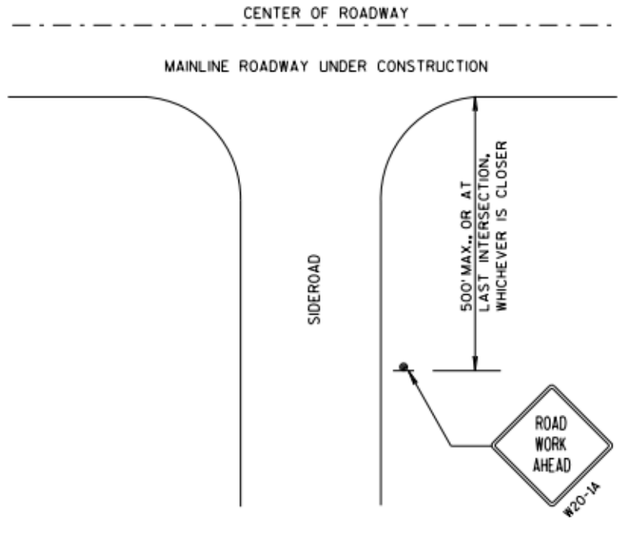

LEGEND

- SIGN ON PERMANENT SUPPORT
- DIRECTION OF TRAFFIC
- WORK AREA

TRAFFIC CONTROL, ADVANCE WARNING SIGNS 45 M.P.H. OR GREATER TWO-WAY UNDIVIDED ROAD OPEN TO TRAFFIC

PROJECT NO: RD16-003	HWY: CTH S	COUNTY: KENOSHA	CONSTRUCTION DETAILS	SHEET: 75	E

FILE NAME : _____ PLOT DATE : _____ PLOT BY : _____ PLOT NAME : _____ PLOT SCALE : 1:1

2

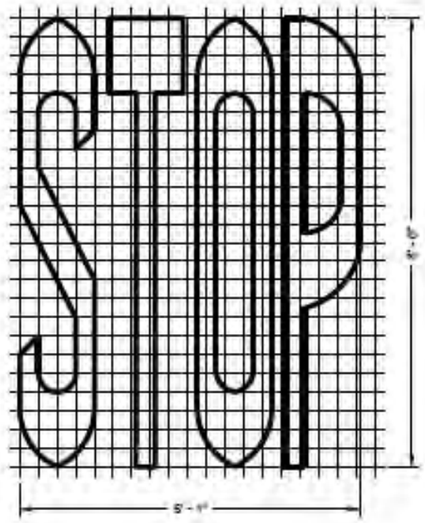

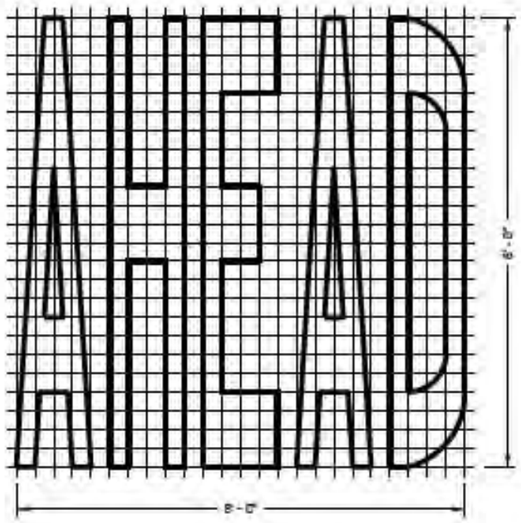

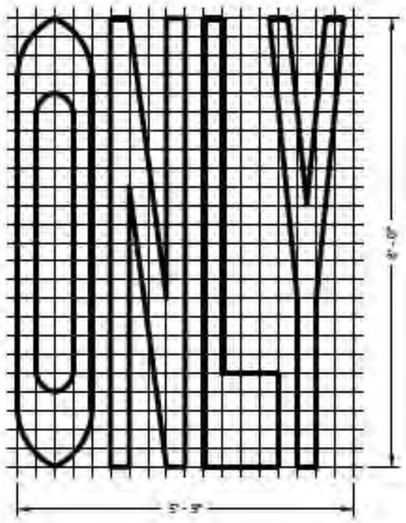

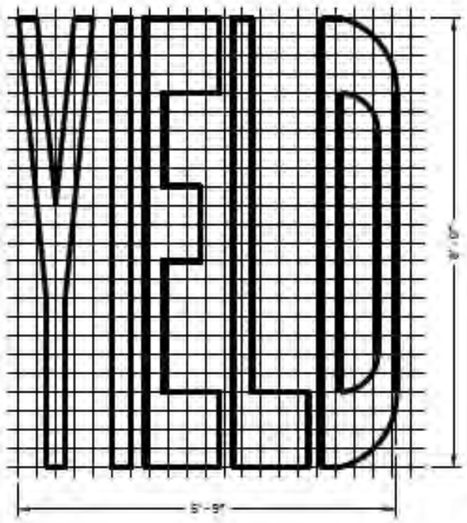

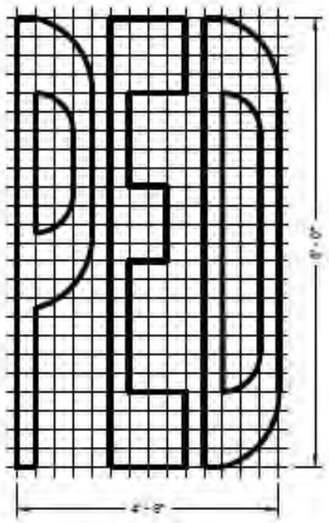

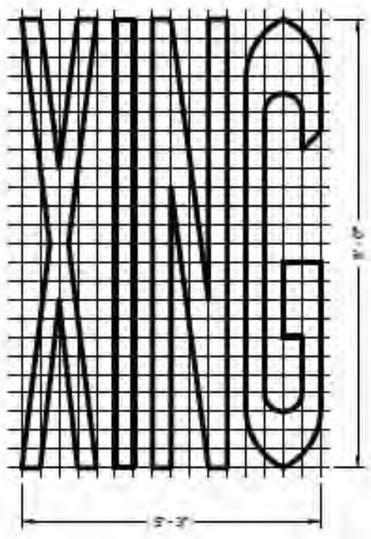

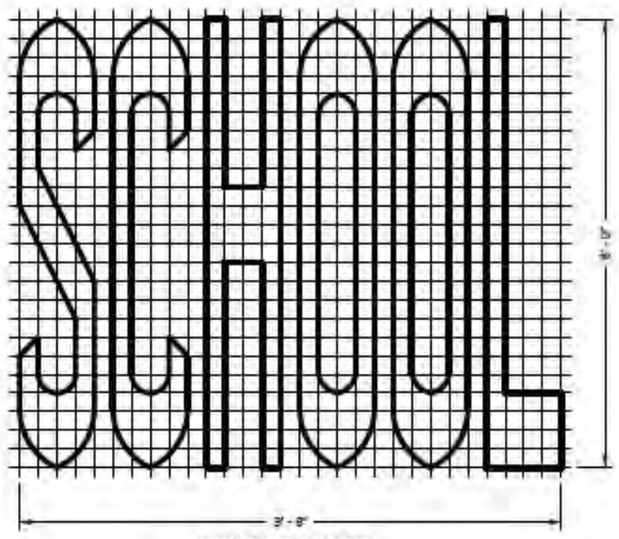

SINGLE LANE

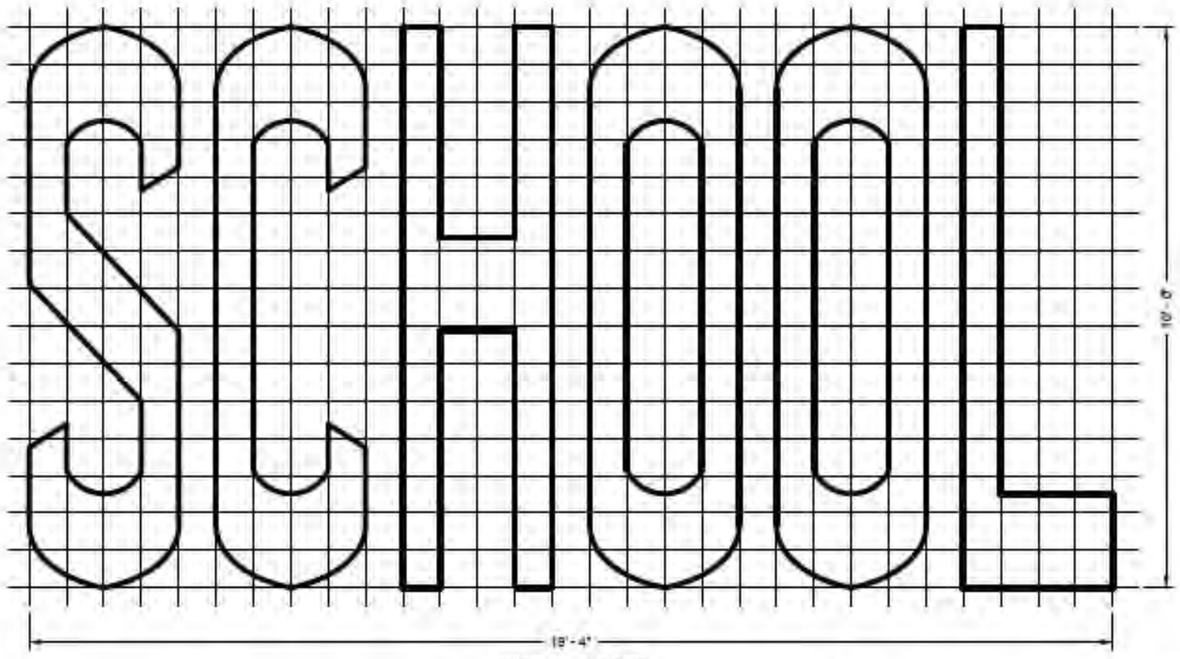

TWO - LANE

PAVEMENT MARKING WORDS

GENERAL NOTES

DETAILS OF INSTALLATION, MATERIALS AND WORKMANSHIP NOT SHOWN ON THIS DRAWING SHALL CONFORM TO THE PERTINENT REQUIREMENTS OF THE STANDARD SPECIFICATIONS AND APPLICABLE SPECIAL PROVISIONS.

2

GENERAL NOTES

DETAILS OF INSTALLATION, MATERIALS AND WORKMANSHIP NOT SHOWN ON THIS DRAWING SHALL CONFORM TO THE PERTINENT REQUIREMENTS OF THE STANDARD SPECIFICATIONS AND APPLICABLE SPECIAL PROVISIONS.

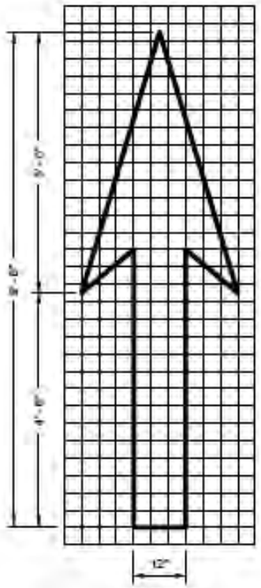

TYPE 1

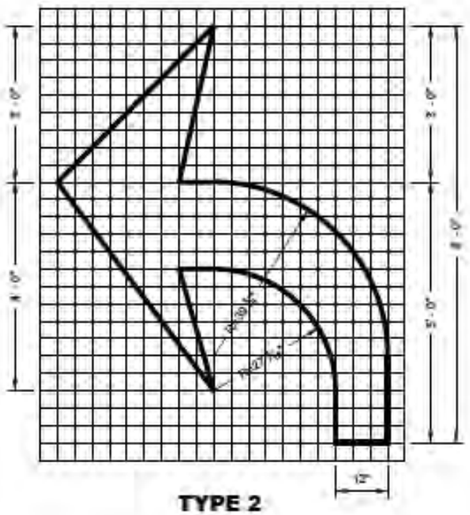

TYPE 2

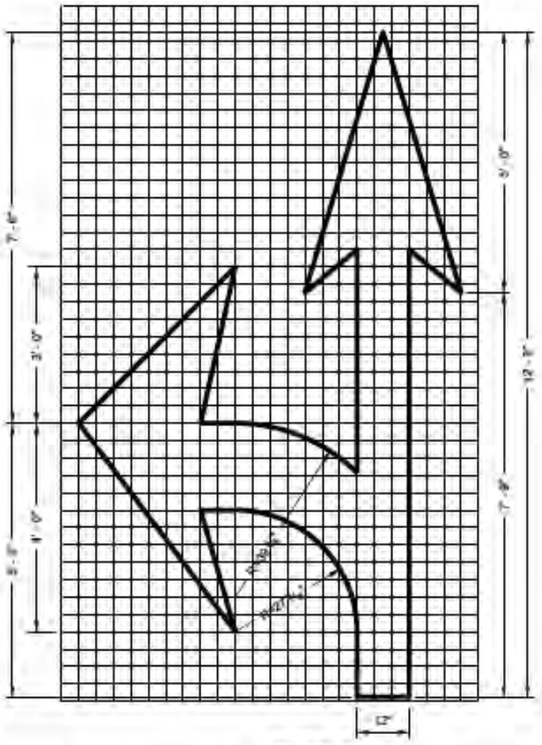

TYPE 3

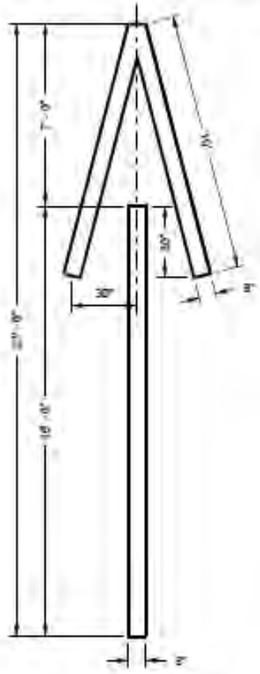

TYPE 4

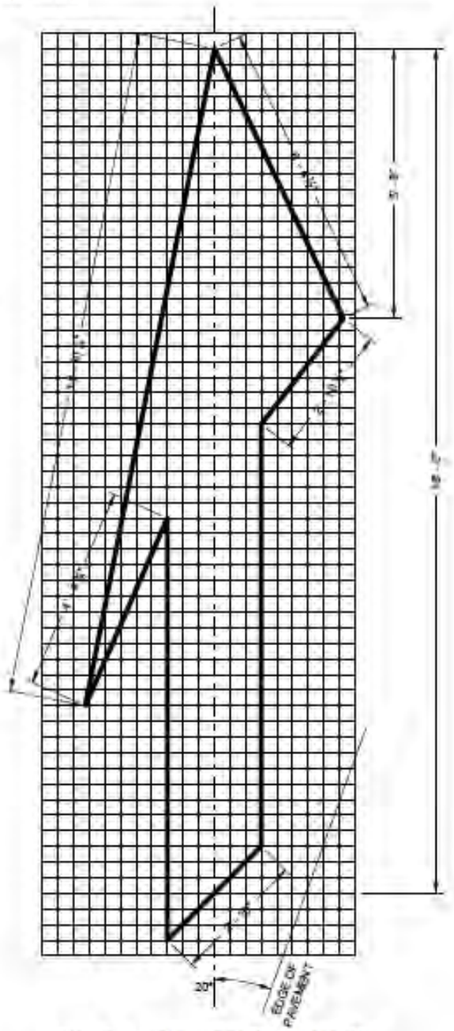

TYPE 5 LANE DROP ARROW

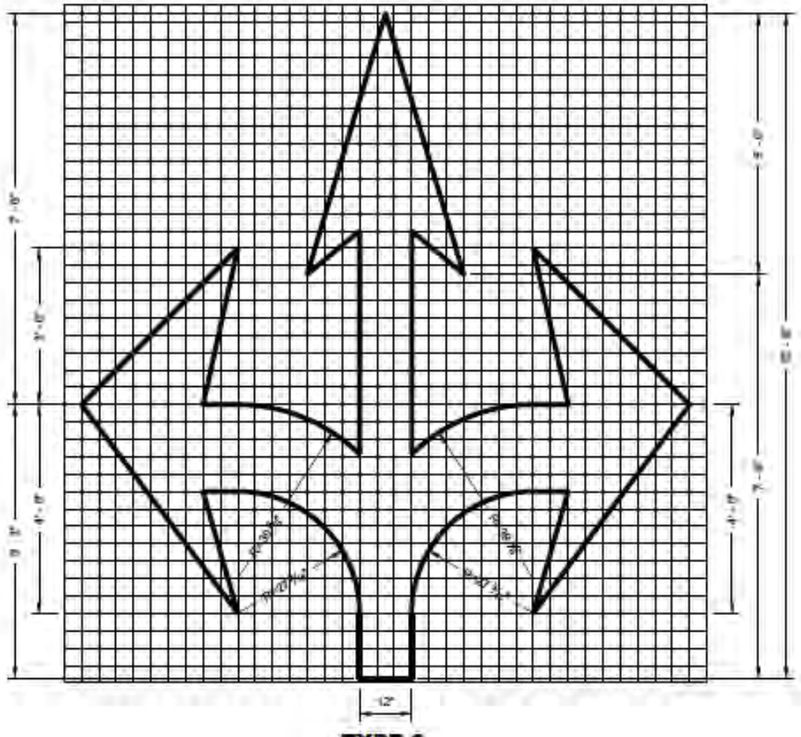

TYPE 6

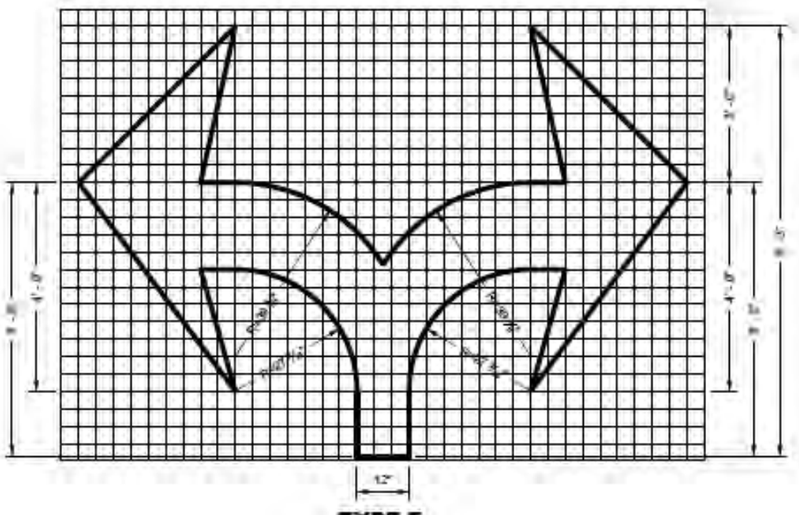

TYPE 7

PAVEMENT MARKING ARROWS

PROJECT NO: RD16-003	HWY: CTH S	COUNTY: KENOSHA	CONSTRUCTION DETAILS	SHEET: 77	E

FILE NAME : _____ PLOT DATE : _____ PLOT BY : _____ PLOT NAME : _____ PLOT SCALE : 1:1

2

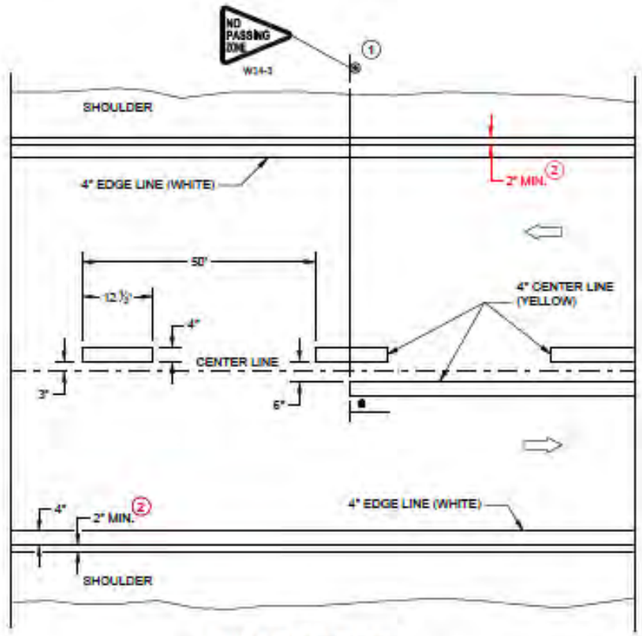

TWO WAY TRAFFIC

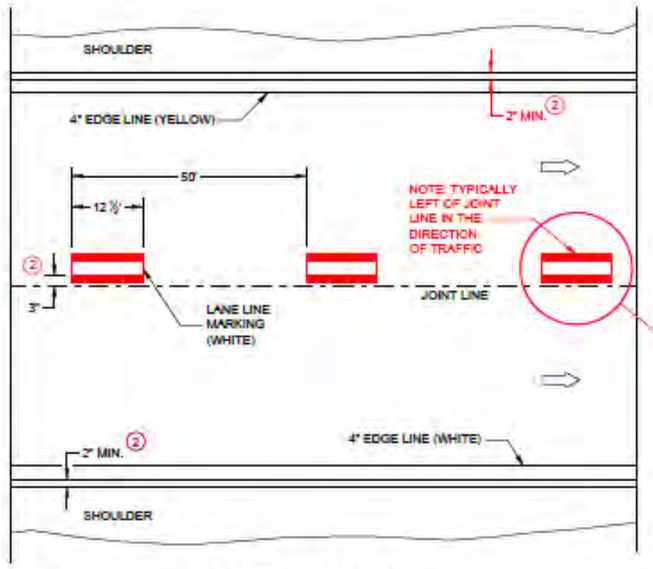

ONE WAY TRAFFIC

PERMANENT PAVEMENT MARKING

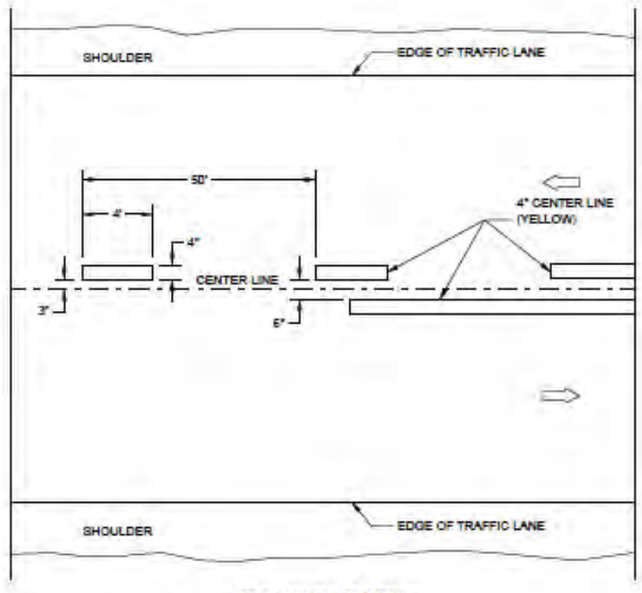

TWO WAY TRAFFIC

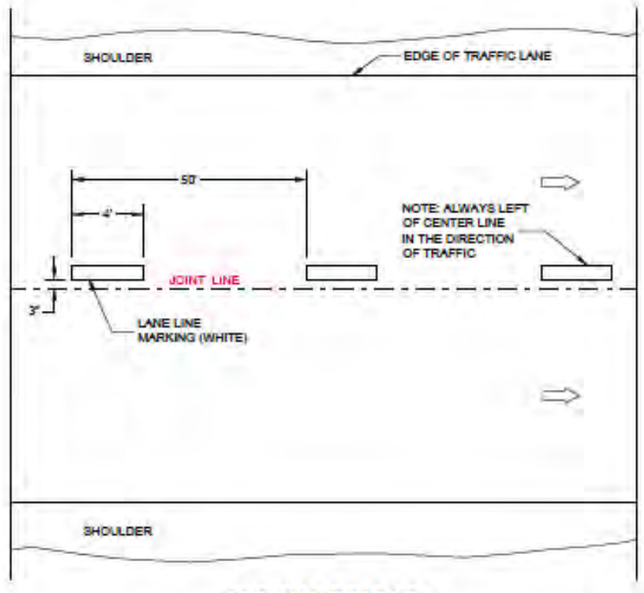

ONE WAY TRAFFIC

TEMPORARY PAVEMENT MARKING

GENERAL NOTES

DETAILS OF CONSTRUCTION NO SHOWN ON THIS DRAWING SHALL CONFORM TO STANDARD SPECIFICATIONS AND SPECIAL PROVISIONS.

1. LOCATE THE NO PASSING ZONE W14-3 SIGN WITH 50 FEET OF THE "T" MARKING
2. MEASURE FROM EDGE OF MARKING TO JOINT LINE. THIS DOES NOT INCLUDE SPACE NEEDED FOR GROOVING OPERATIONS.

LEGEND

- "T" MARKING
- SIGN ON PERMANENT SUPPORT
- DIRECTION OF TRAFFIC

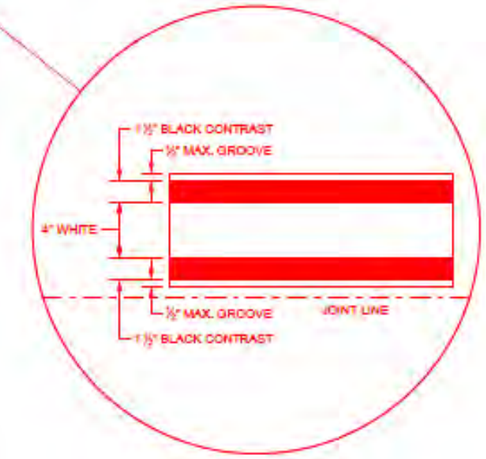

LONGITUDINAL MARKING (MAINLINE)

PROJECT NO: RD16-003	HWY: CTH S	COUNTY: KENOSHA	CONSTRUCTION DETAILS	SHEET: 78	E

FILE NAME : _____ PLOT DATE : _____ PLOT BY : _____ PLOT NAME : _____ PLOT SCALE : 1:1

2

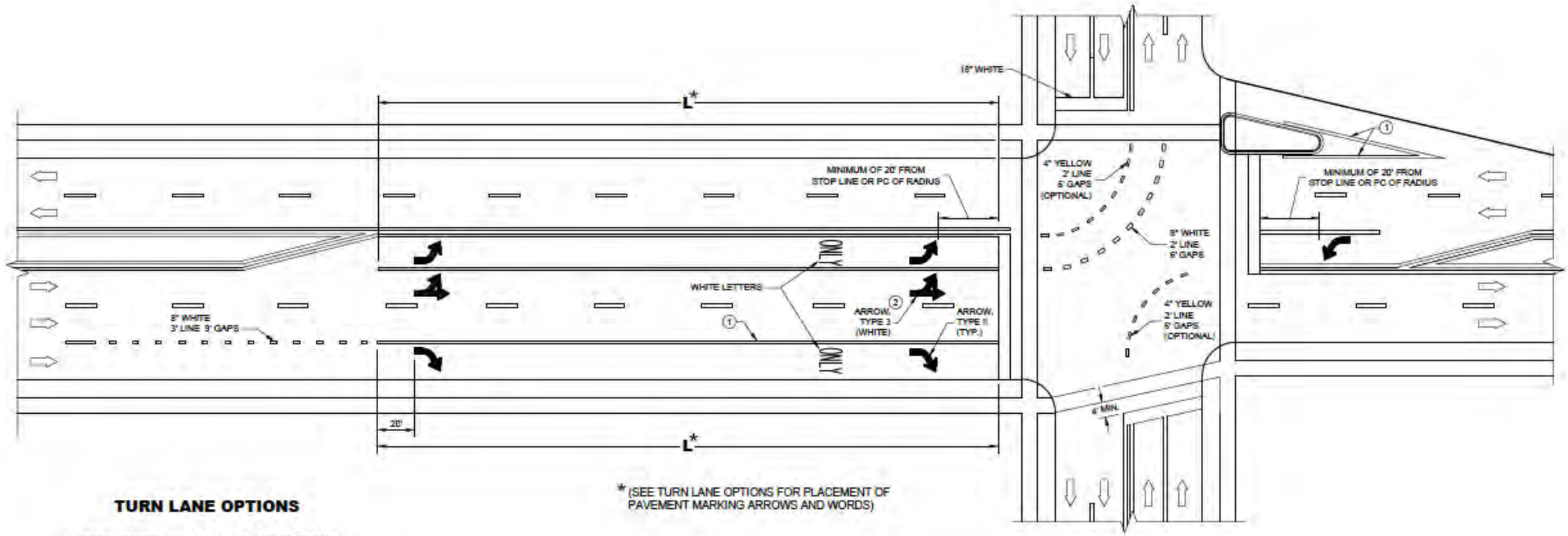

*(SEE TURN LANE OPTIONS FOR PLACEMENT OF PAVEMENT MARKING ARROWS AND WORDS)

TURN LANE OPTIONS

LENGTH OF TURN BAY (L) OF 0 - 47' DOES NOT REQUIRE PAVEMENT MARKING ARROWS OR WORDS

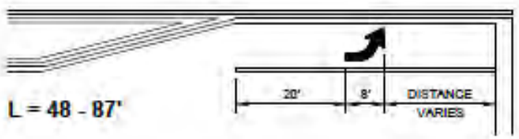

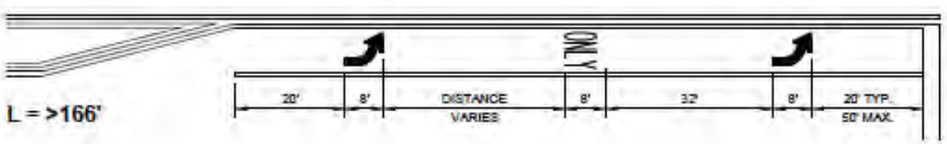

GENERAL NOTES

1. 8" WHITE
2. QUANTITY AND LOCATION OF TYPE 3 ARROWS ARE THE SAME AS THE TYPE II ARROWS IN THE ADJACENT TURN LANE. FOR TURN LANES WITH A PHYSICAL SEPARATION IN THE SAME DIRECTION OF TRAVEL, THE ARROWS AND "ONLY" MARKING MAY BE ELIMINATED.

DIRECTION OF TRAFFIC

L = LENGTH OF TURN BAY

PAVEMENT MARKING (TURN LANES)

PROJECT NO: RD16-003	HWY: CTH S	COUNTY: KENOSHA	CONSTRUCTION DETAILS	SHEET: 79	E

FILE NAME : _____ PLOT DATE : _____ PLOT BY : _____ PLOT NAME : _____ PLOT SCALE : 1:1

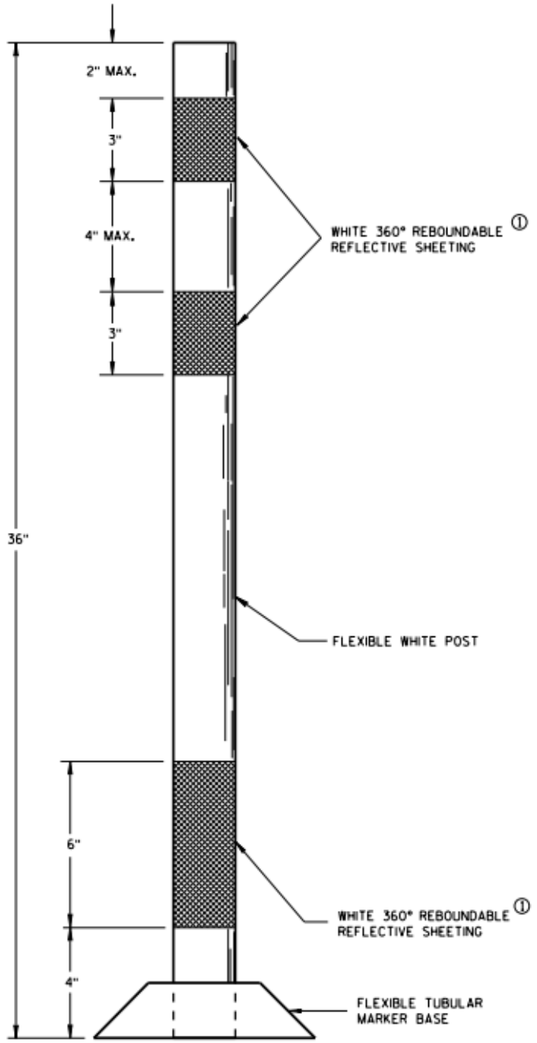

FLEXIBLE TUBULAR MARKER POST PERMANENT CROSSOVER

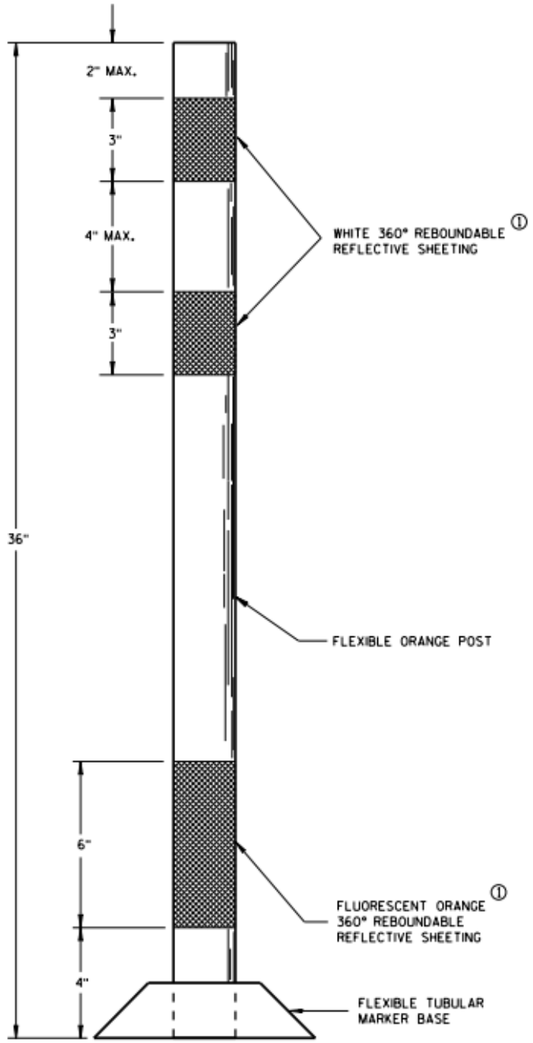

FLEXIBLE TUBULAR MARKER POST WORK ZONE

GENERAL NOTES

DETAILS OF CONSTRUCTION NOT SHOWN ON THIS DRAWING SHALL CONFORM TO THE PERTINENT REQUIREMENTS OF THE STANDARD SPECIFICATIONS AND APPLICABLE SPECIAL PROVISIONS.

SURFACE MOUNTED BASES SHALL BE FURNISHED IN ACCORDANCE WITH MANUFACTURERS RECOMMENDATIONS TO BE COMPATIBLE WITH FLEXIBLE TUBULAR MARKER POSTS TO A SIZE AND SHAPE THAT WILL PROVIDE A STABLE POST FOUNDATION WHEN SECURED TO THE PAVEMENT.

THE ASPHALTIC ADHESIVE OR BUTYL PAD FURNISHED SHALL BE IN ACCORDANCE WITH MANUFACTURERS RECOMMENDATIONS, UNLESS DIRECTED BY THE ENGINEER TO USE BOLTS.

① REFLECTIVE SHEETING SHALL FOLLOW THE REQUIREMENTS IN THE APPROVED PRODUCTS LISTING FOR SIGN SHEETING.

CHANNELIZING DEVICES FLEXIBLE TUBULAR MARKER POST

PROJECT NO: RD16-003	HWY: CTH S	COUNTY: KENOSHA	CONSTRUCTION DETAILS	SHEET: 80	E

FILE NAME : _____ PLOT DATE : _____ PLOT BY : _____ PLOT NAME : _____ PLOT SCALE : 1:1

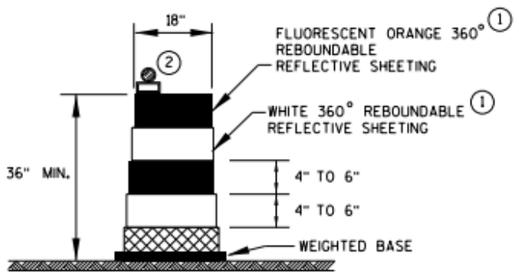

DRUM

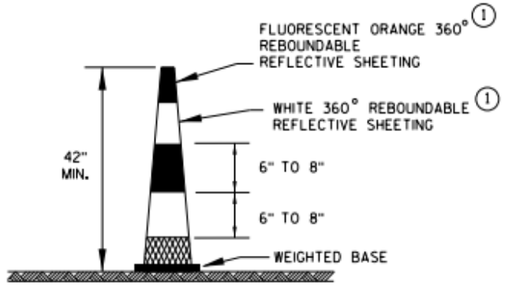

42" CONE

DO NOT USE IN TAPERS
½ SPACING OF DRUMS

GENERAL NOTES

(1) REFLECTIVE SHEETING SHALL FOLLOW THE REQUIREMENTS IN THE APPROVED PRODUCTS LISTING FOR SIGN SHEETING.

(2) LOCATION OF WARNING LIGHTS WHEN SHOWN ON THE PLAN.

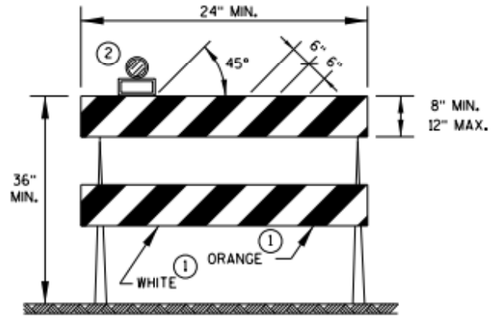

TYPE 2 BARRICADE

FOR RAILS LESS THAN 36" LONG, 4" WIDE STRIPES MAY BE USED. ALL STRIPES SHALL SLOPE DOWNWARD TO THE TRAFFIC SIDE FOR CHANNELIZATION.

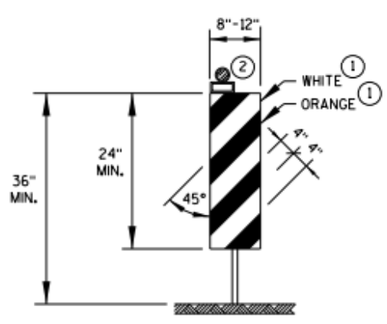

VERTICAL PANEL

THE STRIPES SHALL SLOPE DOWNWARD TO THE TRAFFIC SIDE FOR CHANNELIZATION.

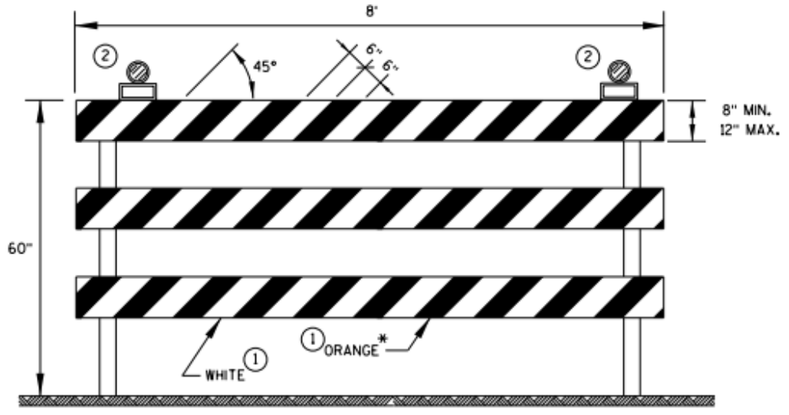

TYPE 3 BARRICADE

IF SIGN MOUNTED, DO NOT COVER MORE THAN 50% OF THE TOP TWO RAILS OR 33% OF THE TOTAL AREA OF THE THREE RAILS.

* IF USED FOR A PERMANENT APPLICATION, USE RED SHEETING.

CHANNELIZING DEVICES DRUMS, CONES, BARRICADES AND VERTICAL PANELS

2

LEGEND

SIGN ON PORTABLE OR PERMANENT SUPPORT

TEMPORARY PORTABLE RUMBLE STRIP ARRAY

DIRECTION OF TRAFFIC

WORK AREA

FLAGGER, EQUIPPED WITH STOP/SLOW PADDLE FASTENED ON SUPPORT STAFF

GENERAL NOTES

DETAILS OF TRAFFIC CONTROL DEVICES AND INSTALLATION NOT SHOWN ON THIS DRAWING SHALL CONFORM TO THE PERTINENT REQUIREMENTS OF THE STANDARD SPECIFICATIONS, THE SPECIAL PROVISIONS, AND THE MANUAL ON UNIFORM TRAFFIC CONTROL DEVICES.

ALL SIGNS ARE 48" X 48" UNLESS OTHERWISE NOTED.

"WO" SIGNS ARE THE SAME AS "W" SIGNS EXCEPT THE BACKGROUND IS ORANGE.

THE EXACT NUMBER, LOCATION AND SPACING OF ALL SIGNS, DEVICES, AND LOCATION OF ALL FLAGGERS SHALL BE ADJUSTED TO FIT FIELD CONDITIONS AS APPROVED BY THE ENGINEER.

THE FIRST ADVANCE WARNING SIGN SHOULD TYPICALLY BE LOCATED IN ADVANCE OF THE ANTICIPATED TRAFFIC BACKUP OR QUEUE.

WHEN A SIDE ROAD OR RAMP INTERSECTS THE FACILITY ON WHICH THE WORK IS BEING PERFORMED, ADDITIONAL TRAFFIC CONTROLS SHALL BE PROVIDED AS SPECIFIED IN THE PLANS AND/OR THE SPECIAL PROVISIONS OR AS APPROVED BY THE ENGINEER.

FLAGGING

FLAGGERS SHALL BE IN SIGHT OF EACH OTHER OR IN DIRECT COMMUNICATION AT ALL TIMES. THEY SHALL BE EQUIPPED WITH STOP/SLOW PADDLES FASTENED ON SUPPORT STAFFS. WHEN THE FLAGGING OPERATION IS NOT IN EFFECT REMOVE TEMPORARY PORTABLE RUMBLE STRIPS PRIOR TO COVERING OR REMOVING ALL ADVANCE SIGNING.

① FOR MOVING WORK OPERATIONS, POST ADDITIONAL W20-7A FLAGGER SIGNS AT APPROXIMATELY 3,500' INTERVALS IN THE MOVING WORK OPERATION OR AS APPROVED BY THE ENGINEER.

② SIGN NOT REQUIRED IF FLAGGING OPERATION OCCURS WITHIN A SIGNED ROAD WORK ZONE AREA.

WHEN THE DISTANCE BETWEEN FLAGGERS EXCEEDS 2 MILES, A PILOT CAR IS REQUIRED. WHEN CURVES REDUCE SIGHT DISTANCE BELOW 400', A PILOT CAR IS REQUIRED.

TEMPORARY PORTABLE RUMBLE STRIPS

UTILIZE TEMPORARY PORTABLE RUMBLE STRIPS ON ALL FLAGGING OPERATIONS.

③ EACH TEMPORARY PORTABLE RUMBLE STRIP ARRAY CONSISTS OF THREE RUMBLE STRIPS SPACED ACCORDING TO MANUFACTURER'S RECOMMENDATION, PLACED TRANSVERSE ACROSS THE LANE AT LOCATIONS SHOWN.

ONLY USE TEMPORARY PORTABLE RUMBLE STRIPS FOR THE APPROVED PRODUCTS LIST.

INSTALL TEMPORARY RUMBLE STRIPS PER MANUFACTURER'S RECOMMENDATIONS.

PLACE ADVANCE SIGNING PRIOR TO INSTALLING TEMPORARY RUMBLE STRIPS.

DO NOT INSTALL TEMPORARY PORTABLE RUMBLE STRIPS ON GRAVEL, MILLED SURFACES, OR ASPHALT THAT HAS BEEN PAVED LESS THAN 12 HOURS.

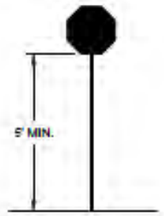

STOP/SLOW PADDLE ON SUPPORT STAFF

SIGN AND TEMPORARY RUMBLE STRIP ARRAY SPACING TABLE

SPEED LIMIT	SPACING "A"
25-30 MPH	200'
35-40 MPH	350'
45-55 MPH	500'

W03-4

USE OF W03-4 SIGN IS OPTIONAL. WHEN USED, THIS SIGN SHALL BE LOCATED BETWEEN THE W20-7A AND W20-4A SIGNS, USING SPACING "A".

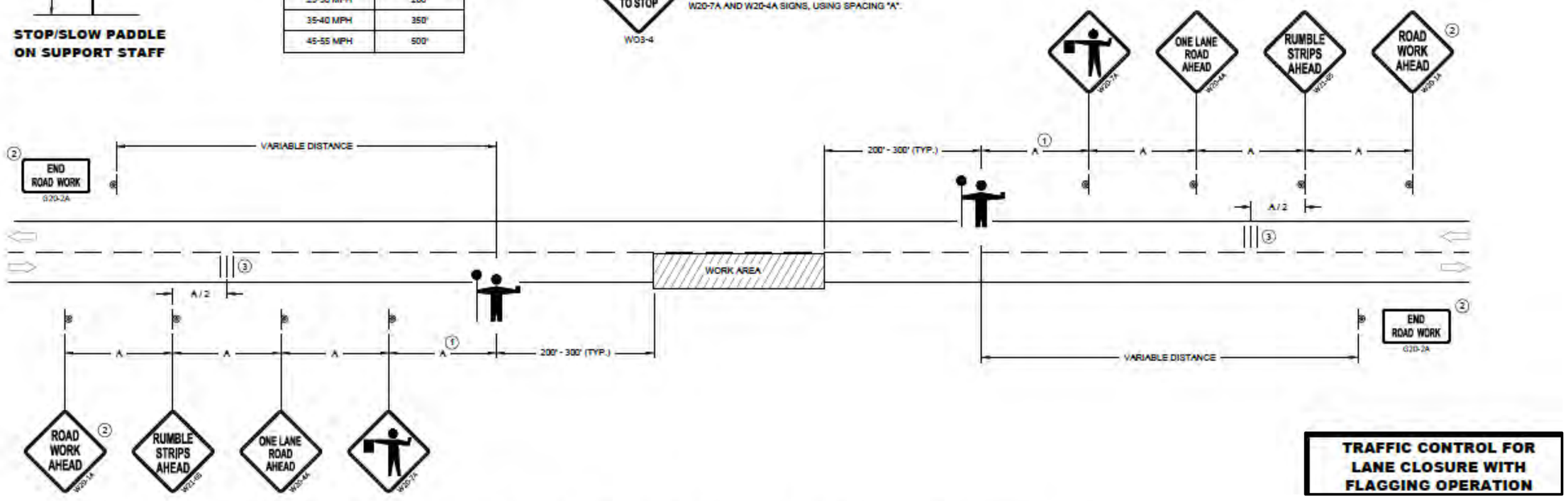

TRAFFIC CONTROL FOR LANE CLOSURE WITH FLAGGING OPERATION

TRAFFIC CONTROL FOR LANE CLOSURE WITH FLAGGING OPERATION

PROJECT NO: RD16-003	HWY: CTH S	COUNTY: KENOSHA	CONSTRUCTION DETAILS	SHEET: 82	E

FILE NAME : _____ PLOT DATE : _____ PLOT BY : _____ PLOT NAME : _____ PLOT SCALE : 1:1

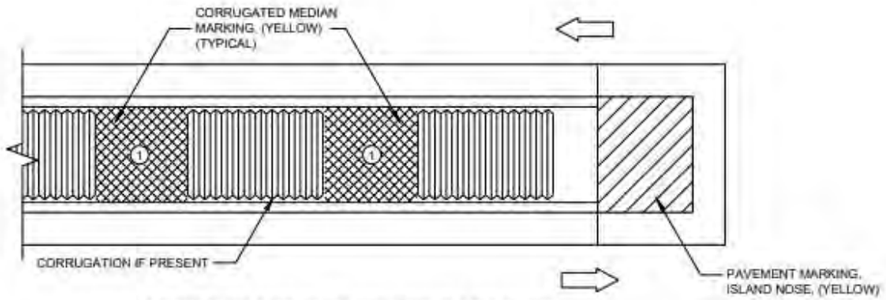

MEDIAN ISLAND WITH SQUARE BLUNT NOSE

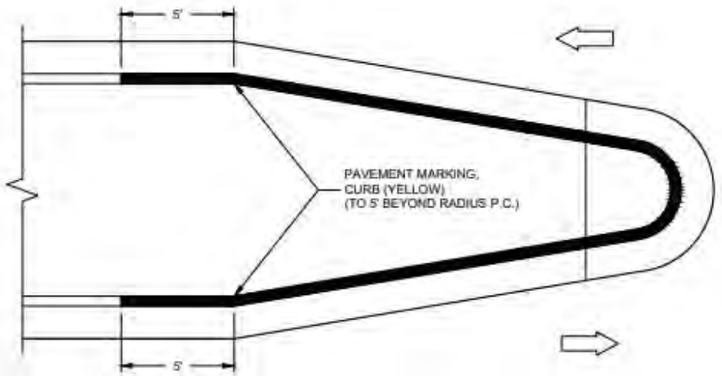

MEDIAN ISLAND WITH ROUND BLUNT NOSE

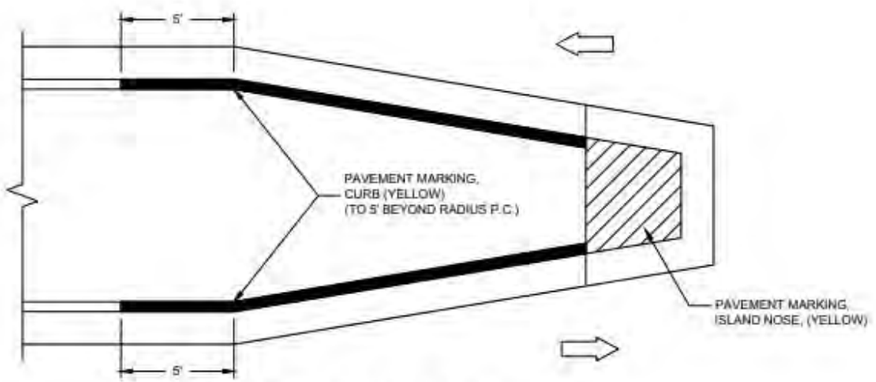

MEDIAN ISLAND WITH SLOPED NOSE

TYPICAL PLACEMENT OF PAVEMENT MARKING ON MEDIAN ISLANDS

GENERAL NOTES

WHEN CONCRETE CORRUGATED MEDIAN IS CONSTRUCTED TO SEPARATE TRAFFIC OPERATING IN THE OPPOSING DIRECTION, YELLOW PAVEMENT MARKING SHALL BE APPLIED TO THE FLAT PORTION OF THE CONCRETE CORRUGATED MEDIAN. THE ITEM OF PAVEMENT MARKING, CONCRETE CORRUGATED MEDIAN, WILL BE MEASURED IN PLACE AND ACCEPTED IN ACCORDANCE WITH THE CONTRACT AND PAID FOR AT THE CONTRACT UNIT PRICE PER SQUARE FOOT

ISLAND NOSE MARKING

CURB MARKING

CORRUGATED MEDIAN MARKING

DIRECTION OF TRAVEL

PAVEMENT MARKINGS (ISLANDS)

2

PROJECT NO: RD16-003	HWY: CTH S	COUNTY: KENOSHA	CONSTRUCTION DETAILS	SHEET: 83	E

FILE NAME : _____ PLOT DATE : _____ PLOT BY : _____ PLOT NAME : _____ PLOT SCALE : 1:1

2

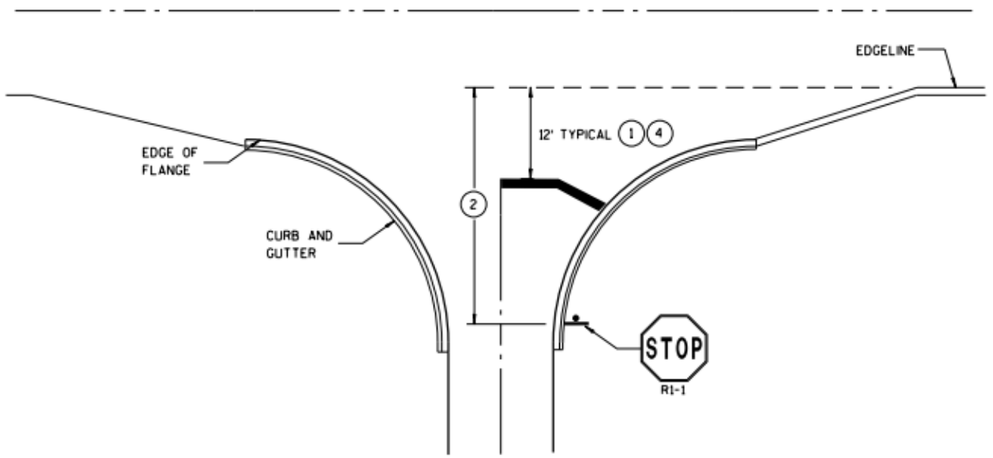

TYPICAL STOP LINE PAVEMENT MARKING
WITH CURB AND GUTTER

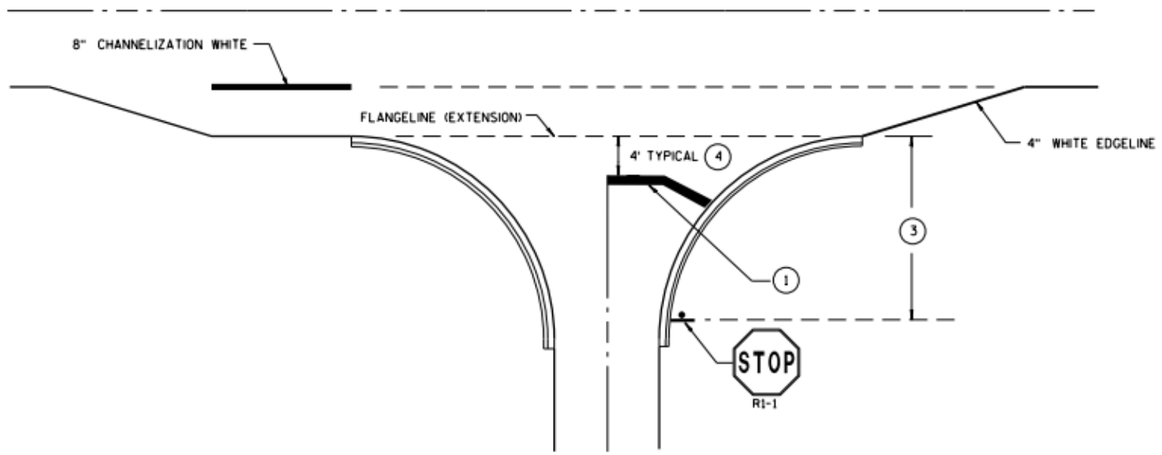

TYPICAL STOP LINE PAVEMENT MARKING
FOR SIDEROADS WITH RIGHT TURN LANE

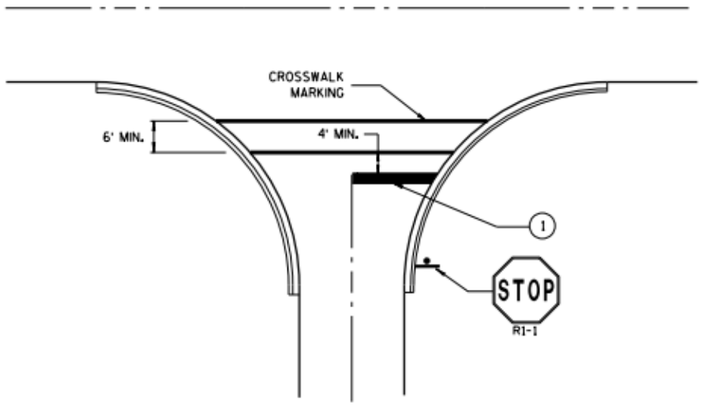

TYPICAL STOP LINE PAVEMENT MARKING
FOR SIDEROADS WITH CROSSWALK MARKING

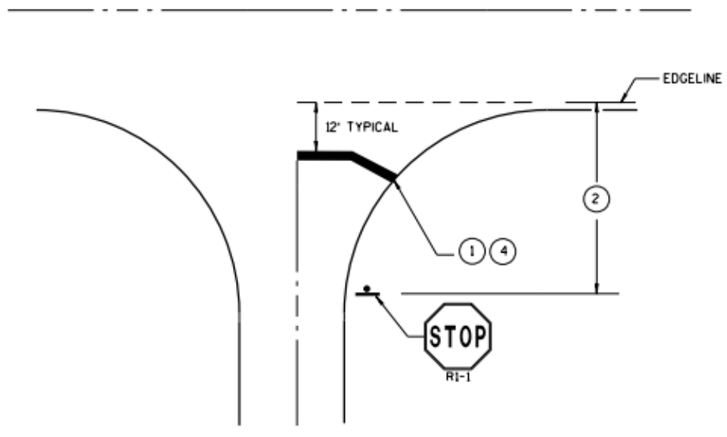

TYPICAL STOP LINE PAVEMENT MARKING
WITHOUT CURB AND GUTTER

GENERAL NOTES

STOP SIGN SHALL BE PLACED A MINIMUM OF 6 FEET TO A MAXIMUM OF 50 FEET FROM THE EDGELINE LOCATION.

(1) 18-INCH STOP LINES MAY BE DELETED OR ADDED BY THE PROJECT ENGINEER BASED ON VISIBILITY AND SIGHT LINES.

(2) IF STOP SIGN IS LESS THAN OR EQUAL TO 40 FEET FROM THE EDGELINE THAN NO STOP LINE IS REQUIRED.

(3) IF STOP SIGN IS LESS THAN OR EQUAL TO 30 FEET FROM THE FLANGELINE EXTENSION THAN NO STOP LINE IS REQUIRED.

(4) MOVE CLOSER TO EDGE OF TRAVEL LANE AS NEEDED FOR VISIBILITY AND SIGHT LINES. (NO CLOSER THAN 4 FEET).

STOP LINE AND CROSSWALK
PAVEMENT MARKING

2

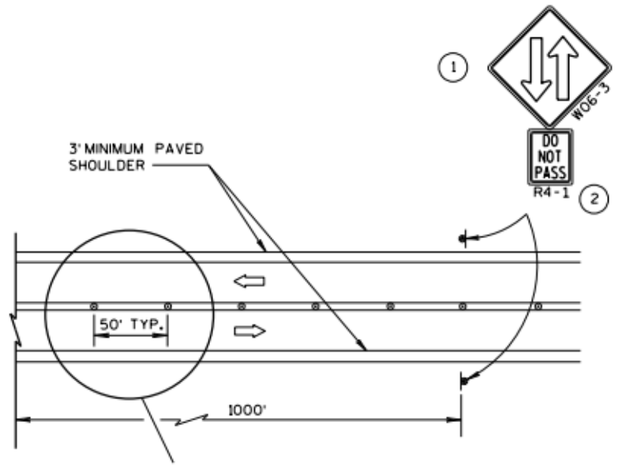

TWO LANE, TWO WAY OPERATION

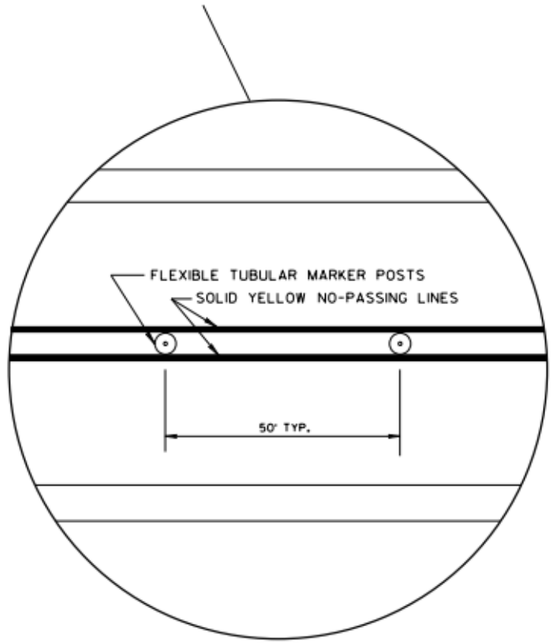

GENERAL NOTES

ALL SIGNS ARE 48"x48" UNLESS OTHERS NOTED.

"WO" IS THE SAME AS "W" EXCEPT THE BACKGROUND IS ORANGE.

ANY SIGNS TEMPORARY OR EXISTING, WHICH CONFLICT WITH THE TRAFFIC CONTROL "IN USE" SHALL BE REMOVED OR COVERED AS NEEDED AND AS APPROVED BY THE ENGINEER. NO WARNING LIGHTS SHALL BE WORKING ON "COVERED" OR "DOWNED" SIGNS.

THE EXACT NUMBER, LOCATION, AND SPACING OF ALL SIGNS AND DEVICES SHALL BE ADJUSTED TO FIT FIELD CONDITIONS AS APPROVED BY THE ENGINEER.

THE SPACING BETWEEN SIGNS SHOULD BE ADJUSTED TO NOT CONFLICT WITH AND TO PROVIDE A MINIMUM OF 200 FEET, (500 FEET DESIRABLE) DISTANCE TO EXISTING SIGNS.

A SINGLE ROW OF FLEXIBLE TUBULAR MARKERS ON CENTERLINE EXTEND FOR THE ENTIRE LENGTH OF TWO-WAY TRAFFIC AT 50-FOOT SPACING.

COVER EXISTING CENTERLINE STRIPE WITH TEMPORARY PAVEMENT MARKING, 4-INCH DOUBLE YELLOW.

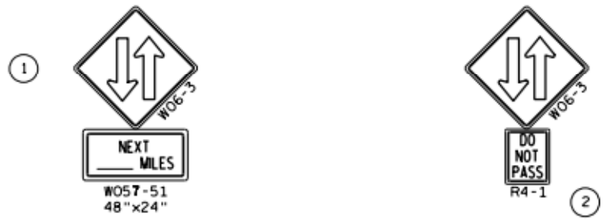

THE W06-3 WITH THE W057-51 SHALL BE LOCATED 200 FEET BEYOND THE END OF THE ACCELERATION LANE OF EACH ENTRANCE RAMP AND/OR 500 FEET BEYOND ANY SIDEROAD. THE W06-3 WITH THE R4-1 SHALL BE LOCATED 1000 FEET BEYOND THE W06-3 AND THE W057-51 AND THE SIGNS SHALL BE ALTERNATED WITH ONE MILE INTERVALS BETWEEN W06-3 SIGNS.

(2) CONVENTIONAL: 24"x30"
FREEWAY AND EXPRESSWAY: 36"x48"

LEGEND

- SIGN ON PERMANENT SUPPORT
- DELINEATOR FLEXIBLE/TUBULAR MARKER
- DIRECTION OF TRAFFIC

TRAFFIC CONTROL, TWO LANE TWO WAY OPERATION

PROJECT NO: RD16-003	HWY: CTH S	COUNTY: KENOSHA	CONSTRUCTION DETAILS	SHEET: 85	E

FILE NAME : _____ PLOT DATE : _____ PLOT BY : _____ PLOT NAME : _____ PLOT SCALE : 1:1

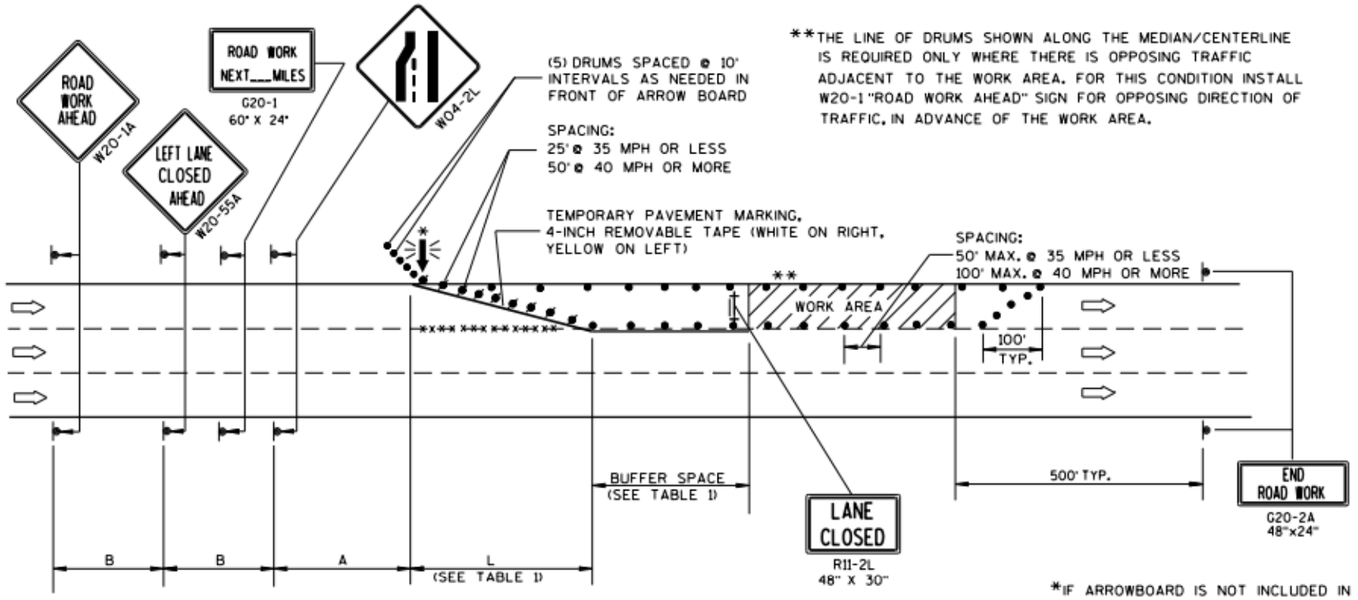

B=400' AT 25-30 MPH
700' AT 35-40 MPH
1000' AT 45-55 MPH

A=200' AT 25-30 MPH
350' AT 35-40 MPH
500' AT 45-55 MPH

(PLACE BARRICADE AND SIGN APPROX. EVERY 1000' ACROSS THE CLOSED LANE)

**THE LINE OF DRUMS SHOWN ALONG THE MEDIAN/CENTERLINE IS REQUIRED ONLY WHERE THERE IS OPPOSING TRAFFIC ADJACENT TO THE WORK AREA. FOR THIS CONDITION INSTALL W20-1 "ROAD WORK AHEAD" SIGN FOR OPPOSING DIRECTION OF TRAFFIC, IN ADVANCE OF THE WORK AREA.

*IF ARROWBOARD IS NOT INCLUDED IN MISCELLANEOUS QUANTITIES, SUBSTITUTE A TYPE III BARRICADE WITH W01-6 SIGN IN THE LANE CLOSURE TAPER.

W01-6
48"x24"

TABLE 1
TAPER AND BUFFER SPACE FOR 12' LANE WIDTH

S	L	BUFFER SPACE
25	125'	55'
30	180'	85'
35	245'	120'
40	320'	170'
45	540'	220'
50	600'	280'
55	660'	335'

FOR LANE WIDTH OTHER THAN 12':

L = WS AT 45 MPH OR GREATER

$L = \frac{WS^2}{60}$ AT 40 MPH OR LESS

L = TAPER LENGTH IN FEET

S = NON-CONSTRUCTION SPEED LIMIT (MPH)

W = WIDTH OF LANE CLOSURE

LEGEND

- TYPE III BARRICADE WITH ATTACHED SIGN
- SIGN ON PERMANENT SUPPORT
- TRAFFIC CONTROL DRUM WITH TYPE "C" STEADY BURN LIGHT
- TRAFFIC CONTROL DRUM
- FLASHING ARROW BOARD
- DIRECTION OF TRAFFIC
- REMOVING PAVEMENT MARKING (SEE GENERAL NOTES)
- WORK AREA

GENERAL NOTES

THIS LANE CLOSURE DETAIL IS TYPICAL FOR CLOSING THE LEFT LANE. FOR A RIGHT LANE CLOSURE, REVERSE THE TRAFFIC CONTROL.

THIS DETAIL MAY BE USED FOR ROADWAYS WITH EITHER TWO OR THREE LANES IN EACH DIRECTION.

THE EXACT NUMBER, LOCATION, AND SPACING OF ALL SIGNS AND DEVICES SHALL BE ADJUSTED TO FIT FIELD CONDITIONS AS APPROVED BY THE ENGINEER.

THE SPACING BETWEEN TRAFFIC CONTROL SIGNS SHOULD BE ADJUSTED TO NOT CONFLICT WITH AND SHOULD PROVIDE A DESIRABLE MINIMUM OF 200 FEET CLEARANCE TO EXISTING SIGNS THAT WILL REMAIN IN PLACE.

ALL SIGNS ARE 48"x48" UNLESS OTHERWISE NOTED. IF NECESSARY DUE TO SPACE CONSTRAINTS IN URBAN AREAS, 36" X 36" SIGNS MAY BE USED IF APPROVED BY DISTRICT TRAFFIC UNIT.

"WO" SIGNS ARE THE SAME AS "W" SIGNS EXCEPT THE BACKGROUND IS ORANGE.

SIGNS THAT WILL BE IN PLACE LESS THAN 7 CONTINUOUS DAYS AND NIGHTS, OR THAT WILL BE PLACED IN A CLOSED LANE, MAY BE MOUNTED ON PORTABLE SUPPORTS.

ANY SIGNS TEMPORARY OR EXISTING, WHICH CONFLICT WITH TRAFFIC CONTROL "IN USE" SHALL BE REMOVED OR COVERED AS NEEDED AND AS APPROVED BY THE ENGINEER.

REMOVE PAVEMENT MARKINGS AND PLACE TEMPORARY PAVEMENT MARKING, REMOVABLE TAPE IF LANE CLOSURE IS TO BE IN PLACE FOR 4 OR MORE CONTINUOUS DAYS AND NIGHTS.

ON UNDIVIDED ROADWAYS, OMIT THE SIGNS SHOWN ON LEFT SIDE OF ROAD.

W20-1A, G20-1 AND G20-2A SIGNS ARE NOT REQUIRED IF THE LANE CLOSURE IS WITHIN A LARGER WORK ZONE WHERE THESE SIGNS ARE ALREADY PRESENT.

OMIT G20-1 SIGNS IF LENGTH OF WORK AREA IS 2 MILES OR LESS.

CONSIDER GEOMETRICS WHEN LOCATING SIGNS AND ARROWBOARDS SO THE APPROACHING DRIVER HAS A CLEAR VIEW OF THE ARROWBOARDS AND LANE CLOSURE DRUMS.

PLACE THE ARROWBOARD AS CLOSE AS POSSIBLE TO THE BEGINNING OF THE LANE CLOSURE TAPER, PREFERABLY ON THE SHOULDER OR TERRACE.

CHANNELIZING DEVICES PLACED ADJACENT TO WORK AREA SHALL BE PULLED BACK FROM THE TRAVEL LANE WHEN WORK IS NOT IN PROGRESS.

BARRICADES IN A CLOSED LANE THAT MUST BE MOVED FOR A WORK OPERATION SHALL BE IMMEDIATELY RE-ESTABLISHED UPON COMPLETION OF THE OPERATION OR, FOR CONTINUING OPERATIONS, AT THE END OF EACH WORKING DAY.

WARNING LIGHTS ARE NOT REQUIRED IF THE LANE CLOSURE IS A DAYTIME ONLY OPERATION.

TRAFFIC CONTROL, SINGLE LANE CLOSURE, NON-FREEWAY/EXPRESSWAY

2

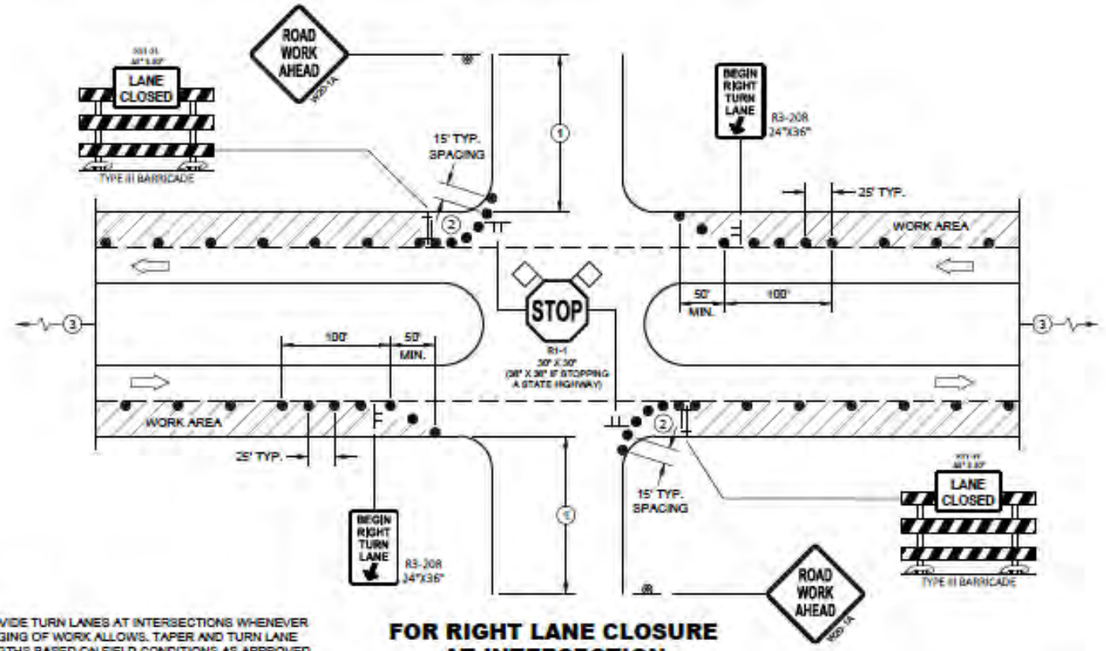

PROVIDE TURN LANES AT INTERSECTIONS WHENEVER STAGING OF WORK ALLOWS. TAPER AND TURN LANE LENGTHS BASED ON FIELD CONDITIONS AS APPROVED BY THE ENGINEER.

FOR RIGHT LANE CLOSURE AT INTERSECTION

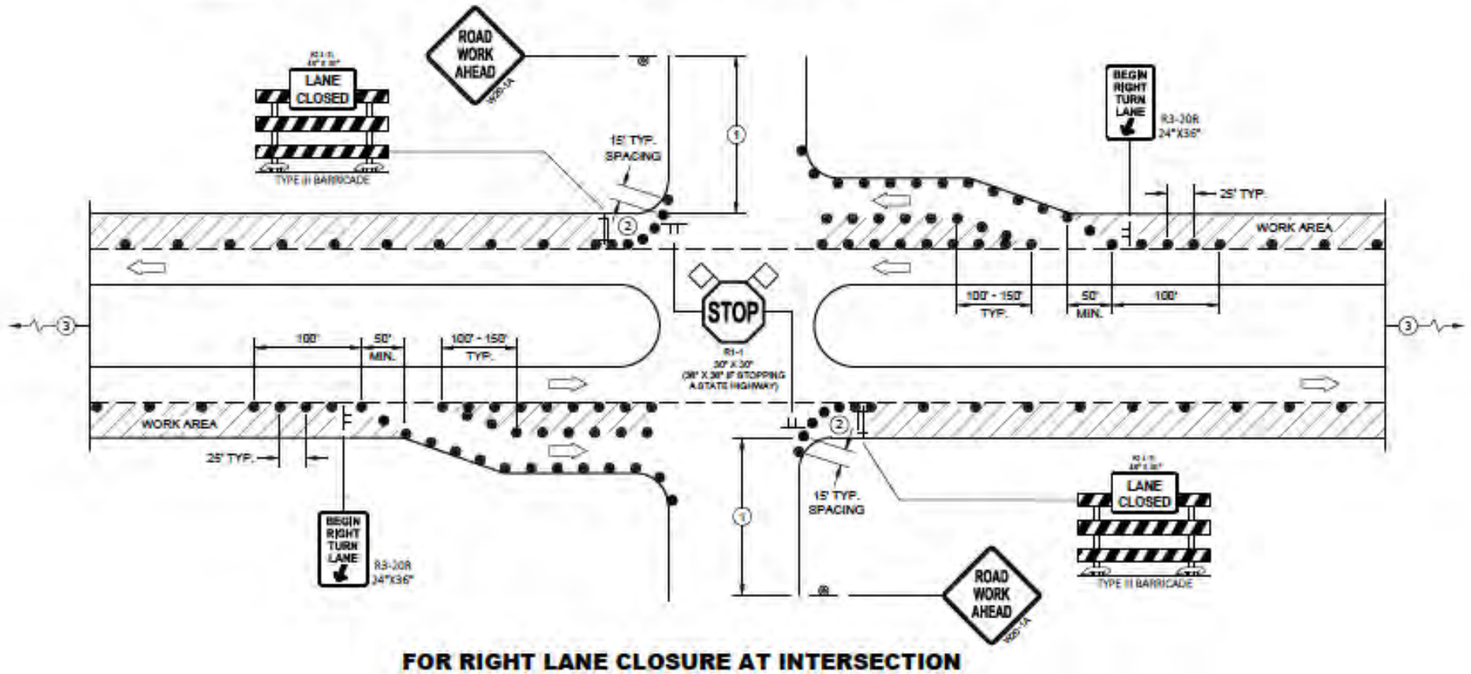

FOR RIGHT LANE CLOSURE AT INTERSECTION (WITH RIGHT TURN BAY OPEN)

GENERAL NOTES

ALL SIGNS ARE 48"X48" UNLESS OTHERWISE NOTED. IF NECESSARY DUE TO SPACE CONSTRAINTS IN URBAN AREAS, 36" X 36" MAY BE USED IF APPROVED BY THE DISTRICT TRAFFIC UNIT.

"WO" SIGN IS THE SAME AS "W" SIGN EXCEPT THE BACKGROUND IS ORANGE.

ANY SIGNS TEMPORARY OR EXISTING, WHICH CONFLICT WITH THE TRAFFIC CONTROL "IN USE" SHALL BE REMOVED OR COVERED AS NEEDED AND AS APPROVED BY THE ENGINEER. NO WARNING LIGHTS SHALL BE WORKING ON COVERED OR "DOWNED" SIGNS.

THE EXACT NUMBER, LOCATION, AND SPACING OF ALL SIGNS AND DEVICES SHALL BE ADJUSTED TO FIT FIELD CONDITIONS AS APPROVED BY THE ENGINEER.

THE SPACING BETWEEN TRAFFIC CONTROL SIGNS SHOULD BE ADJUSTED TO NOT CONFLICT WITH AND TO PROVIDE A MINIMUM OF 200 FEET (500' DESIRABLE) DISTANCE TO EXISTING SIGNS THAT WILL REMAIN IN PLACE

SIGN LAYOUTS SHALL BE IN ACCORDANCE WITH THE FHWA'S MANUAL OF STANDARD HIGHWAY SIGNS OR THE WISCONSIN STANDARD SIGN PLATES.

SIGNS THAT WILL REMAIN IN PLACE LESS THAN 7 CONTINUOUS DAYS AND NIGHTS OR THAT WILL BE PLACED IN A CLOSED LANE MAY BE MOUNTED ON PORTABLE SUPPORTS.

BARRICADES IN A CLOSED LANE THAT MUST BE MOVED FOR A WORK OPERATION SHALL BE IMMEDIATELY REESTABLISHED UPON COMPLETION OF THE OPERATION, OR FOR CONTINUING OPERATIONS, AT THE END OF EACH WORKING DAY.

CHANNELIZING DEVICES PLACED ADJACENT TO WORK AREA SHALL BE PULLED BACK FROM THE TRAVEL LANE WHEN WORK IS NOT IN PROGRESS.

(1) 500' TYPICAL OR AT LAST INTERSECTION, WHICHEVER IS CLOSER.
350' IF 35 - 40 MPH.
200' IF 25 - 30 MPH.

(2) ALSO USE BARRICADE AND 15 FOOT TYPICAL DRUM SPACING AT COMMERCIAL DRIVEWAYS

(3) SEE SEPARATE LANE CLOSURE DETAIL FOR ADDITIONAL TRAFFIC CONTROL.

LEGEND

- SIGN ON TEMPORARY SUPPORT
- SIGN ON PERMANENT SUPPORT
- TRAFFIC CONTROL DRUM
- TYPE III BARRICADE WITH ATTACHED SIGN
- DIRECTION OF TRAFFIC
- FLAGS, 16" X 16" MIN., ORANGE
- WORK AREA

TRAFFIC CONTROL, INTERSECTION WITHIN SINGLE RIGHT LANE CLOSURE

2

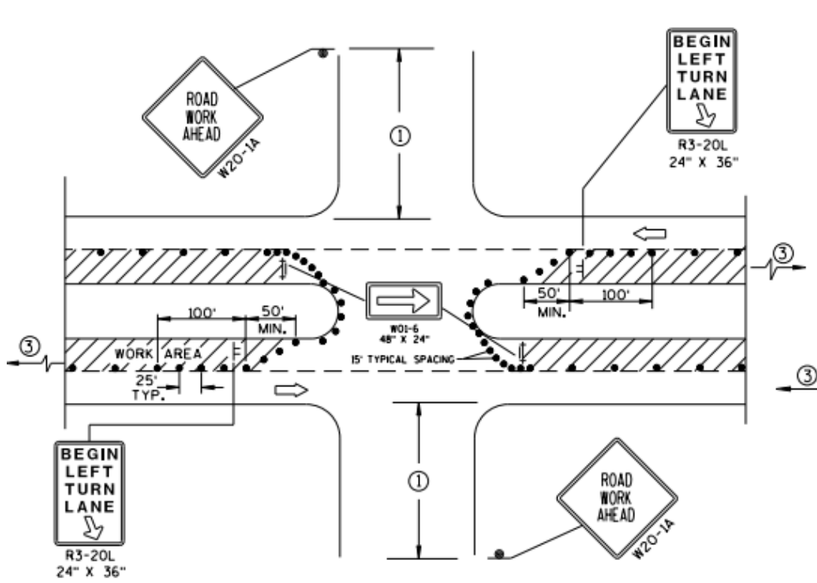

DETAIL A

FOR LEFT LANE CLOSURE AT INTERSECTION OR MEDIAN OPENING

PROVIDE TURN LANES AT INTERSECTIONS WHENEVER STAGING OF WORK ALLOWS. TAPER AND TURN LANE LENGTHS BASED ON FIELD CONDITIONS AS APPROVED BY THE ENGINEER.

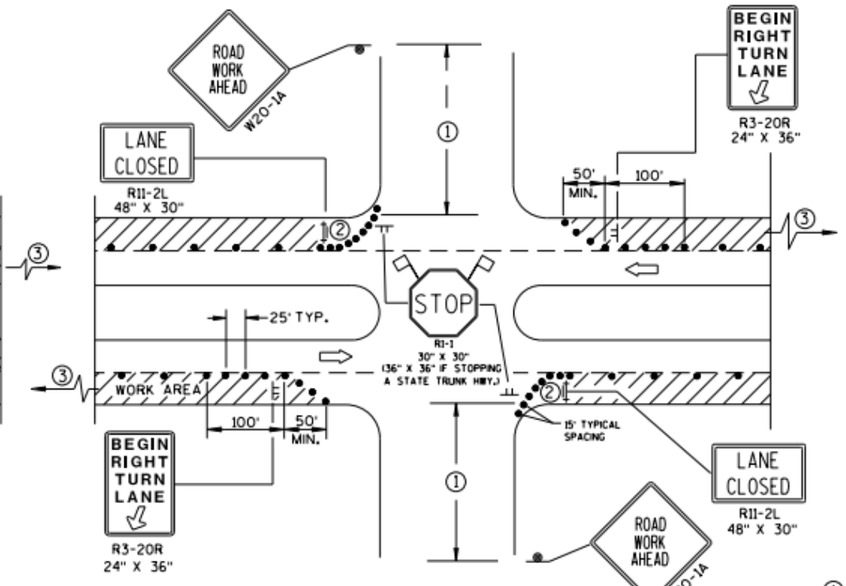

DETAIL B

FOR RIGHT LANE CLOSURE AT INTERSECTION

GENERAL NOTES

THE EXACT NUMBER, LOCATION, AND SPACING OF ALL SIGNS AND DEVICES SHALL BE ADJUSTED TO FIT FIELD CONDITIONS AS APPROVED BY THE ENGINEER.

THE SPACING BETWEEN SIGNS SHOULD BE ADJUSTED TO NOT CONFLICT WITH AND SHOULD PROVIDE A DESIRABLE MINIMUM OF 200 FEET CLEARANCE TO EXISTING SIGNS THAT WILL REMAIN IN PLACE.

ALL SIGNS ARE 48"x48" UNLESS OTHERWISE NOTED. IF NECESSARY DUE TO SPACE CONSTRAINTS IN URBAN AREAS, 36" X 36" SIGNS MAY BE USED IF APPROVED BY DISTRICT TRAFFIC UNIT.

"WO" SIGNS ARE THE SAME AS "W" SIGNS EXCEPT THE BACKGROUND IS ORANGE.

SIGN LAYOUTS SHALL BE IN ACCORDANCE WITH THE FHWA'S MANUAL OF STANDARD HIGHWAY SIGNS OR THE WISCONSIN STANDARD SIGN PLATES.

SIGNS THAT WILL BE IN PLACE LESS THAN 7 CONTINUOUS DAYS AND NIGHTS, OR THAT WILL BE PLACED IN A CLOSED LANE, MAY BE MOUNTED ON PORTABLE SUPPORTS.

ANY SIGNS TEMPORARY OR EXISTING, WHICH CONFLICT WITH TRAFFIC CONTROL "IN USE" SHALL BE REMOVED OR COVERED AS NEEDED AND AS APPROVED BY THE ENGINEER.

CHANNELIZING DEVICES PLACED ADJACENT TO WORK AREA SHALL BE PULLED BACK FROM THE TRAVEL LANE WHEN WORK IS NOT IN PROGRESS.

BARRICADES IN A CLOSED LANE THAT MUST BE MOVED FOR A WORK OPERATION SHALL BE IMMEDIATELY RE-ESTABLISHED UPON COMPLETION OF THE OPERATION OR, FOR CONTINUING OPERATIONS, AT THE END OF EACH WORKING DAY.

① 500' TYPICAL OR AT LAST INTERSECTION, WHICHEVER IS CLOSER.
350' IF 35-40 MPH.
200' IF 25-30 MPH.

② ALSO USE BARRICADE AND 15-FOOT TYPICAL DRUM SPACING AT COMMERCIAL DRIVEWAYS.

③ SEE SEPARATE LANE CLOSURE DETAIL FOR ADDITIONAL TRAFFIC CONTROL.

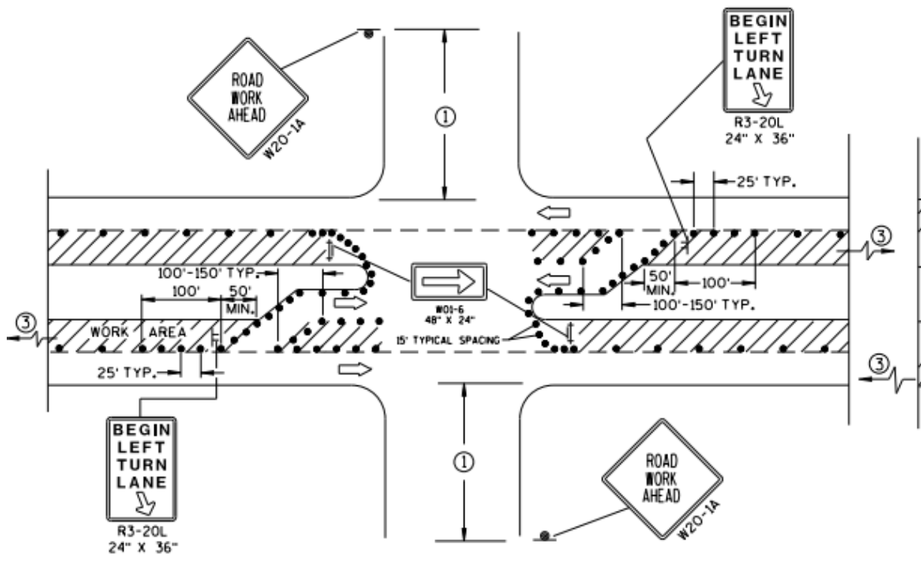

DETAIL C

FOR LEFT LANE CLOSURE AT INTERSECTION OR MEDIAN OPENING (WITH LEFT TURN BAY OPEN)

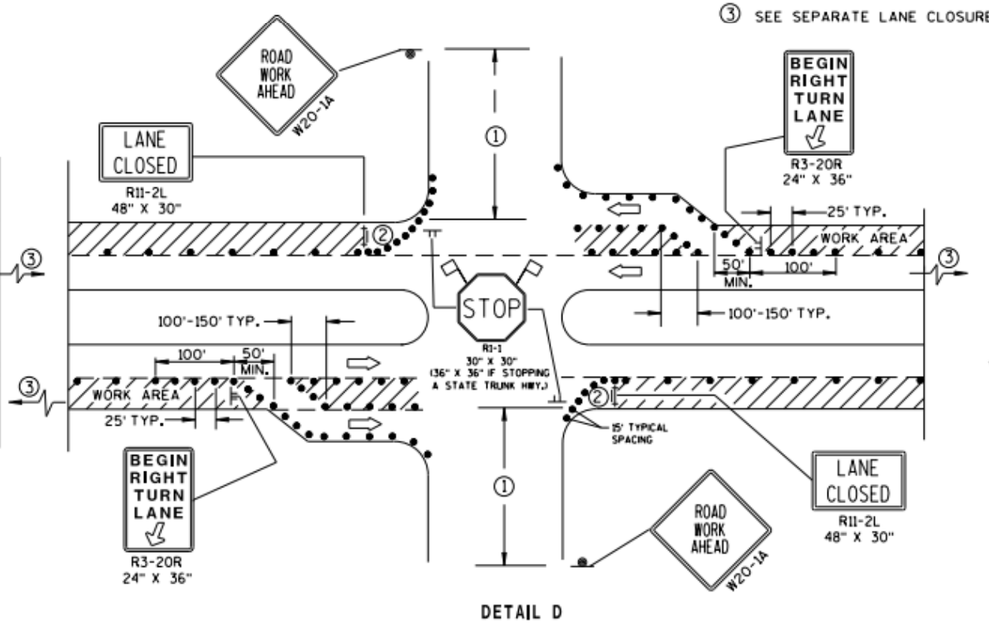

DETAIL D

FOR RIGHT LANE CLOSURE AT INTERSECTION (WITH RIGHT TURN BAY OPEN)

LEGEND

- TRAFFIC CONTROL DRUM
- SIGN ON PERMANENT SUPPORT
- SIGN ON TEMPORARY SUPPORT (5' MIN. MOUNTING HEIGHT)
- TYPE III BARRICADE WITH ATTACHED SIGN AND TYPE "A" WARNING LIGHT (FLASHING)
- DIRECTION OF TRAFFIC
- FLAGS, 16" X 16" MIN., (ORANGE)
- WORK AREA

TRAFFIC CONTROL, INTERSECTION WITHIN SINGLE LANE CLOSURE

PROJECT NO: RD16-003	HWY: CTH S	COUNTY: KENOSHA	CONSTRUCTION DETAILS	SHEET: 88	E

FILE NAME : _____ PLOT DATE : _____ PLOT BY : _____ PLOT NAME : _____ PLOT SCALE : 1:1

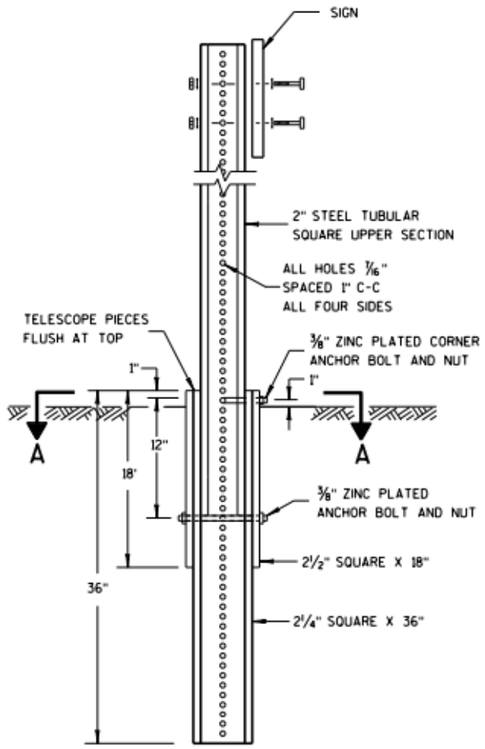

DETAIL OF TUBULAR STEEL SIGN POST

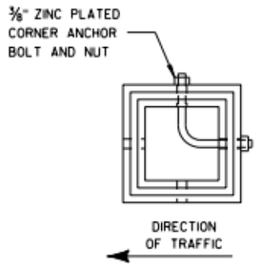

SECTION A-A

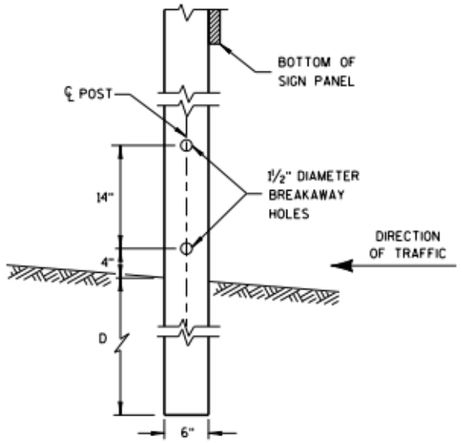

4"x6" WOOD POST MODIFICATION

GENERAL NOTES

1. 6 FEET FROM THE EDGE OF PAVEMENT (EDGE LINE LOCATION) UNLESS OTHERWISE DIRECTED BY THE PROJECT ENGINEER. LATERAL OFFSET SHOULD BE ADJUSTED TO AVOID THE DITCH FLOWLINE.
2. THE EXISTENCE OF CURB AND GUTTER DOES NOT IN ITSELF MANDATE THE VERTICAL CLEARANCE ILLUSTRATED. THAT HEIGHT IS TYPICALLY MEASURED WHERE THERE IS SIDEWALK ADJACENT TO THE ROADWAY OR PARKING IS PERMITTED. IN THE ABSENCE OF SIDEWALK, VERTICAL CLEARANCE IS MEASURED FROM THE TOP OF THE CURB. IF NO SIDEWALK AND NO PARKING, VERTICAL CLEARANCE MAY BE REDUCED TO 5 FOOT MINIMUM. OFFSET OF SIGNS IS MEASURED FROM THE CURB FLOWLINE.
3. FOR SIGNS REQUIRING 4 POSTS, SPACE INTERMEDIATE POSTS EVENLY.

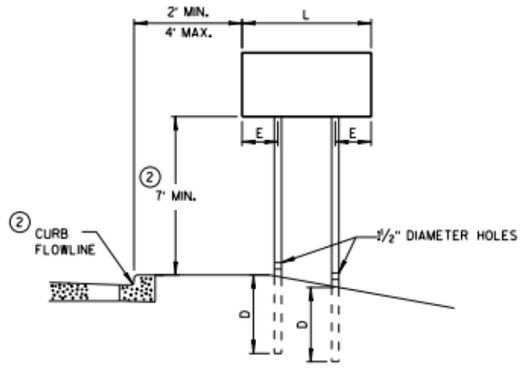

URBAN AREA

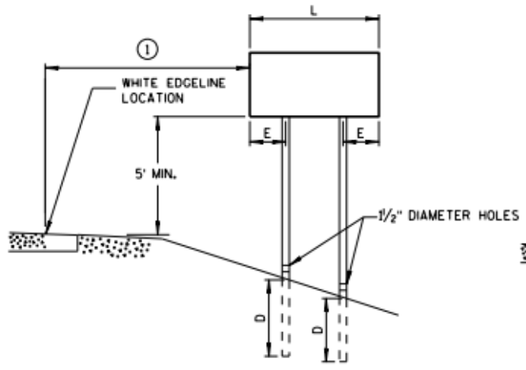

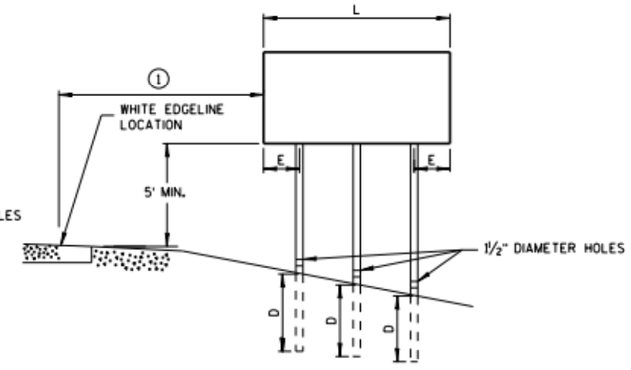

RURAL AREA

POST MOUNTING DETAIL FOR TEMPORARY TRAFFIC CONTROL FIXED MESSAGE SIGNS

TUBULAR STEEL POSTS

AREA OF SIGN INSTALLATION (SQ. FT.)	NUMBER OF REQUIRED TUBULAR STEEL POSTS
9 OR LESS	1
GREATER THAN 9 LESS THAN OR EQUAL TO 18	2
GREATER THAN 18 LESS THAN OR EQUAL TO 27	3

SIGNS WIDER THAN 3 FEET OR LARGER THAN 9 SQ. FT. SHALL BE MOUNTED ON MULTIPLE POSTS (SEE ABOVE TABLE).

SIGNS LARGER THAN 27 SQ. FT. SHALL NOT BE MOUNTED ON TUBULAR STEEL POSTS.

WOOD POST EMBEDMENT DEPTH

AREA OF SIGN INSTALLATION (SQ. FT.)	D (MIN)
20 OR LESS	4'
GREATER THAN 20	5'

4" X 6" WOOD POST

POST SPACING REQUIREMENTS		NUMBER OF WOOD POSTS REQUIRED
L	E	
48" OR LESS AND LESS THAN 20 SQ. FT.	-	1
LESS THAN 60"	12"	2
60" TO 120"	L/5	2
GREATER THAN 120" LESS THAN 168"	12"	3
168" AND GREATER	12"	4

SEE NOTE (3)

TEMPORARY TRAFFIC CONTROL SIGN MOUNTING

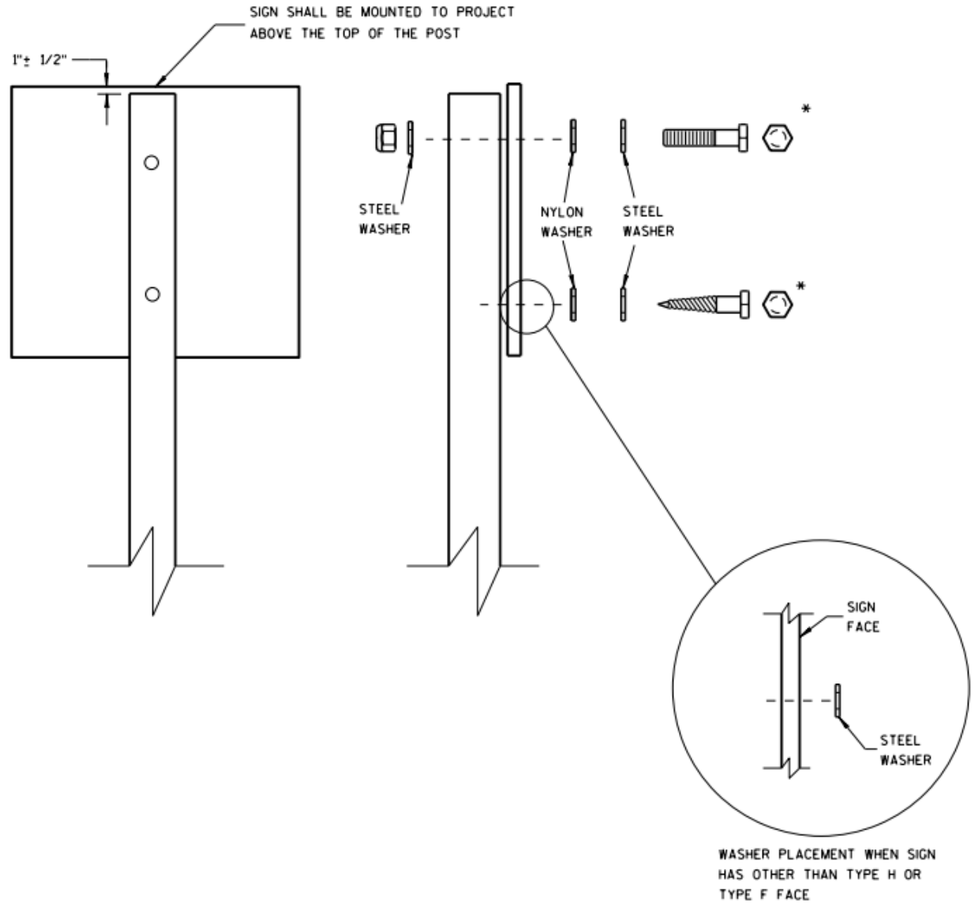

WASHER PLACEMENT WHEN SIGN HAS OTHER THAN TYPE H OR TYPE F FACE

NUTS, BOLTS AND LAGS USED FOR MOUNTING SIGNS SHALL HAVE HEXAGONAL HEADS AND SHALL BE EITHER:

A. HOT DIP GALVANIZED IN ACCORDANCE WITH ASTM DESIGNATION: A 153, CLASS D, OR SC 3

B. ELECTRO-GALVANIZED IN ACCORDANCE WITH ASTM DESIGNATION: B 633, TYPE III, SC 3

THREADS ON BOLTS AND NUTS SHALL BE MANUFACTURED WITH SUFFICIENT ALLOWANCE FOR THE CADMIUM PLATE OR GALVANIZED COATING TO PERMIT THE NUTS TO RUN FREELY ON THE BOLTS.

WOOD POSTS (4" x 4" or 4" x 6")

LAG SCREWS - 3/8" X 3"

MACHINE BOLTS - 5/16" X 6-1/2" OR 7" LENGTH W/ NUTS

SQUARE STEEL POSTS (2" x 2")

MACHINE BOLTS - 3/8" X 3-1/4" LENGTH W/ NUTS

RIVETS - 1/32 " (6605-9-6) BULB-TITE, TRI-FOLD, ALUMINUM BODY/MANDREL O.D. FLANGE .720-.765 INCH, GRIP RANGE .042-.375 INCH

WASHERS (ALL POSTS) -

1-1/4" O.D. X 3/8" I.D. X 1/16" STEEL

1-1/4" O.D. X 3/8" I.D. X .080 NYLON FOR ALL TYPE H SIGNS

* TWO DIFFERENT FASTENING SYSTEMS ARE SHOWN FOR ILLUSTRATION PURPOSES. ON ANY INDIVIDUAL SIGN, EITHER ONE OR THE OTHER SYSTEM SHALL BE USED. ACTUAL NUMBER OF FASTENERS PER SIGN VARIES WITH THE SIGN AREA. FOR A SINGLE POST INSTALLATION, ALL SIGNS GREATER THAN 9 SQ. FT. REQUIRE THE USE OF 3 FASTENERS.

ATTACHMENT OF SIGNS TO POSTS

NOTES:
1. CONTRACTOR TO FIELD VERIFY ELEVATION, GRADES, SLOPES, LENGTHS AND MATCH POINTS PRIOR TO CURB RAMP AND SIDEWALK CONSTRUCTION,
2. THE ENGINEER MAY ADJUST ELEVATIONS TO FIT FIELD CONDITIONS
3. DASHED LINES SHOWN FOR PROPOSED SIDEWALK ARE FOR INFORMATION ONLY AND DO NOT INDICATE JOINT LOCATIONS.
4. GRADE CHANGE BETWEEN THE GUTTER FLANGE SLOPE AND CURB RAMP SLOPE SHALL NOT EXCEED 11%
5. SIDEWALK AND CURB RAMP CROSS SLOPE SHALL NOT EXCEED 2%.
6. SIDEWALK AND CURB RAMP RUNNING SLOPE SHALL NOT EXCEED 8.33% (12H:1V).
7. CURB HEAD HEIGHTS ARE 6" UNLESS NOTED OTHERWISE.
8. CURB RAMP FLARE DIMENSIONS ARE AS SHOWN ON THE PLANS. WHEN CURB RAMP FLARE DIMENSIONS ARE NOT GIVEN REFER TO SDD CURB RAMPS.

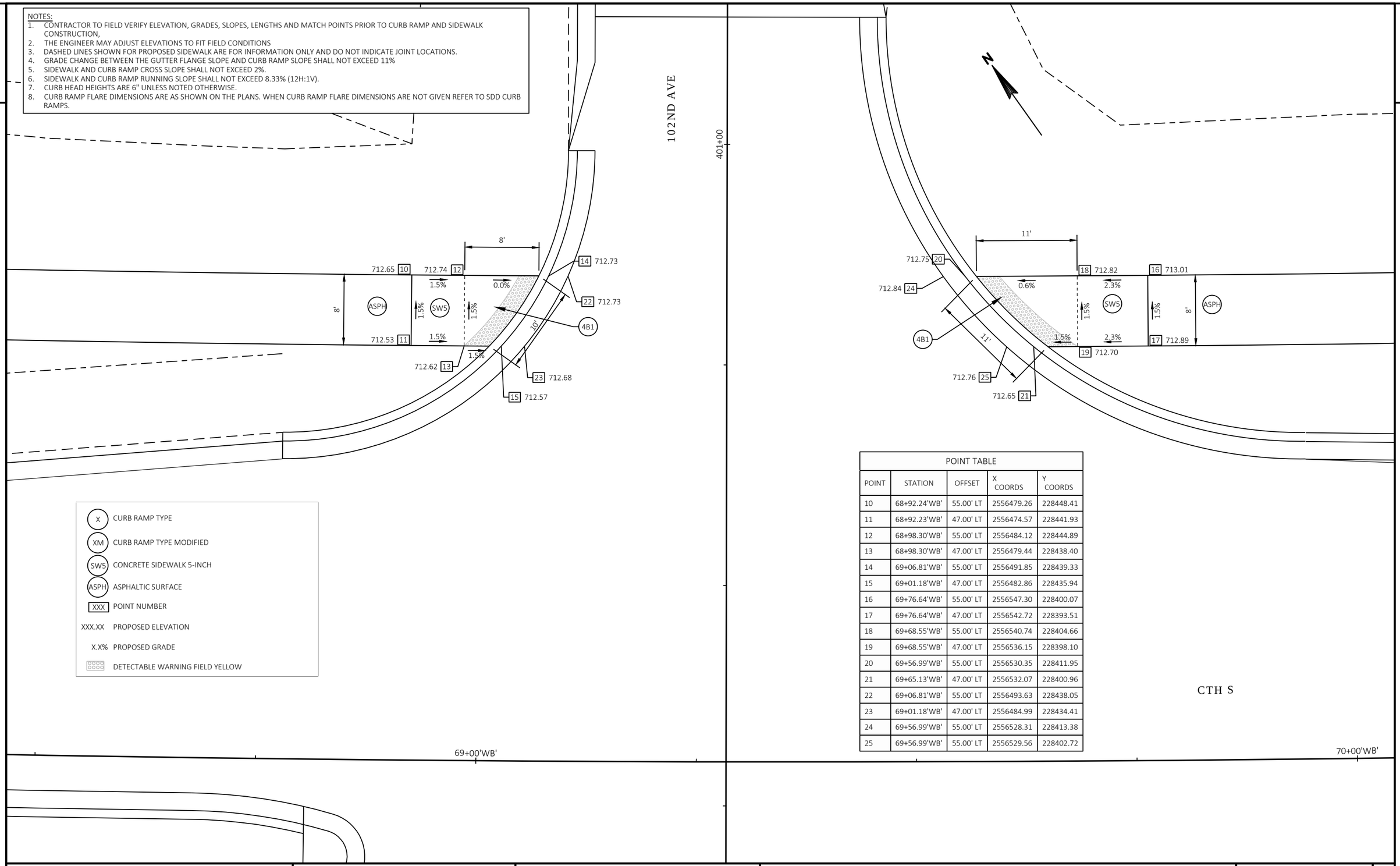

X CURB RAMP TYPE
XM CURB RAMP TYPE MODIFIED
SW5 CONCRETE SIDEWALK 5-INCH
ASPH ASPHALTIC SURFACE
XXX POINT NUMBER
XXX.XX PROPOSED ELEVATION
X.X% PROPOSED GRADE
DETECTABLE WARNING FIELD YELLOW

POINT TABLE

POINT	STATION	OFFSET	X COORDS	Y COORDS
10	68+92.24'WB'	55.00' LT	2556479.26	228448.41
11	68+92.23'WB'	47.00' LT	2556474.57	228441.93
12	68+98.30'WB'	55.00' LT	2556484.12	228444.89
13	68+98.30'WB'	47.00' LT	2556479.44	228438.40
14	69+06.81'WB'	55.00' LT	2556491.85	228439.33
15	69+01.18'WB'	47.00' LT	2556482.86	228435.94
16	69+76.64'WB'	55.00' LT	2556547.30	228400.07
17	69+76.64'WB'	47.00' LT	2556542.72	228393.51
18	69+68.55'WB'	55.00' LT	2556540.74	228404.66
19	69+68.55'WB'	47.00' LT	2556536.15	228398.10
20	69+56.99'WB'	55.00' LT	2556530.35	228411.95
21	69+65.13'WB'	47.00' LT	2556532.07	228400.96
22	69+06.81'WB'	55.00' LT	2556493.63	228438.05
23	69+01.18'WB'	47.00' LT	2556484.99	228434.41
24	69+56.99'WB'	55.00' LT	2556528.31	228413.38
25	69+56.99'WB'	55.00' LT	2556529.56	228402.72

PROJECT NO: RD16-003	HWY: CTH S	COUNTY: KENOSHA	CURB RAMP DETAILS	SHEET 91	E

X CURB RAMP TYPE
XM CURB RAMP TYPE MODIFIED
SW5 CONCRETE SIDEWALK 5-INCH
ASPH ASPHALTIC SURFACE
XXX POINT NUMBER
XXX.XX PROPOSED ELEVATION
X.X% PROPOSED GRADE
DETECTABLE WARNING FIELD YELLOW

NOTES:
1. CONTRACTOR TO FIELD VERIFY ELEVATION, GRADES, SLOPES, LENGTHS AND MATCH POINTS PRIOR TO CURB RAMP AND SIDEWALK CONSTRUCTION,
2. THE ENGINEER MAY ADJUST ELEVATIONS TO FIT FIELD CONDITIONS
3. DASHED LINES SHOWN FOR PROPOSED SIDEWALK ARE FOR INFORMATION ONLY AND DO NOT INDICATE JOINT LOCATIONS.
4. GRADE CHANGE BETWEEN THE GUTTER FLANGE SLOPE AND CURB RAMP SLOPE SHALL NOT EXCEED 11%
5. SIDEWALK AND CURB RAMP CROSS SLOPE SHALL NOT EXCEED 2%.
6. SIDEWALK AND CURB RAMP RUNNING SLOPE SHALL NOT EXCEED 8.33% (12H:1V).
7. CURB HEAD HEIGHTS ARE 6" UNLESS NOTED OTHERWISE.
8. CURB RAMP FLARE DIMENSIONS ARE AS SHOWN ON THE PLANS. WHEN CURB RAMP FLARE DIMENSIONS ARE NOT GIVEN REFER TO SDD CURB RAMPS.

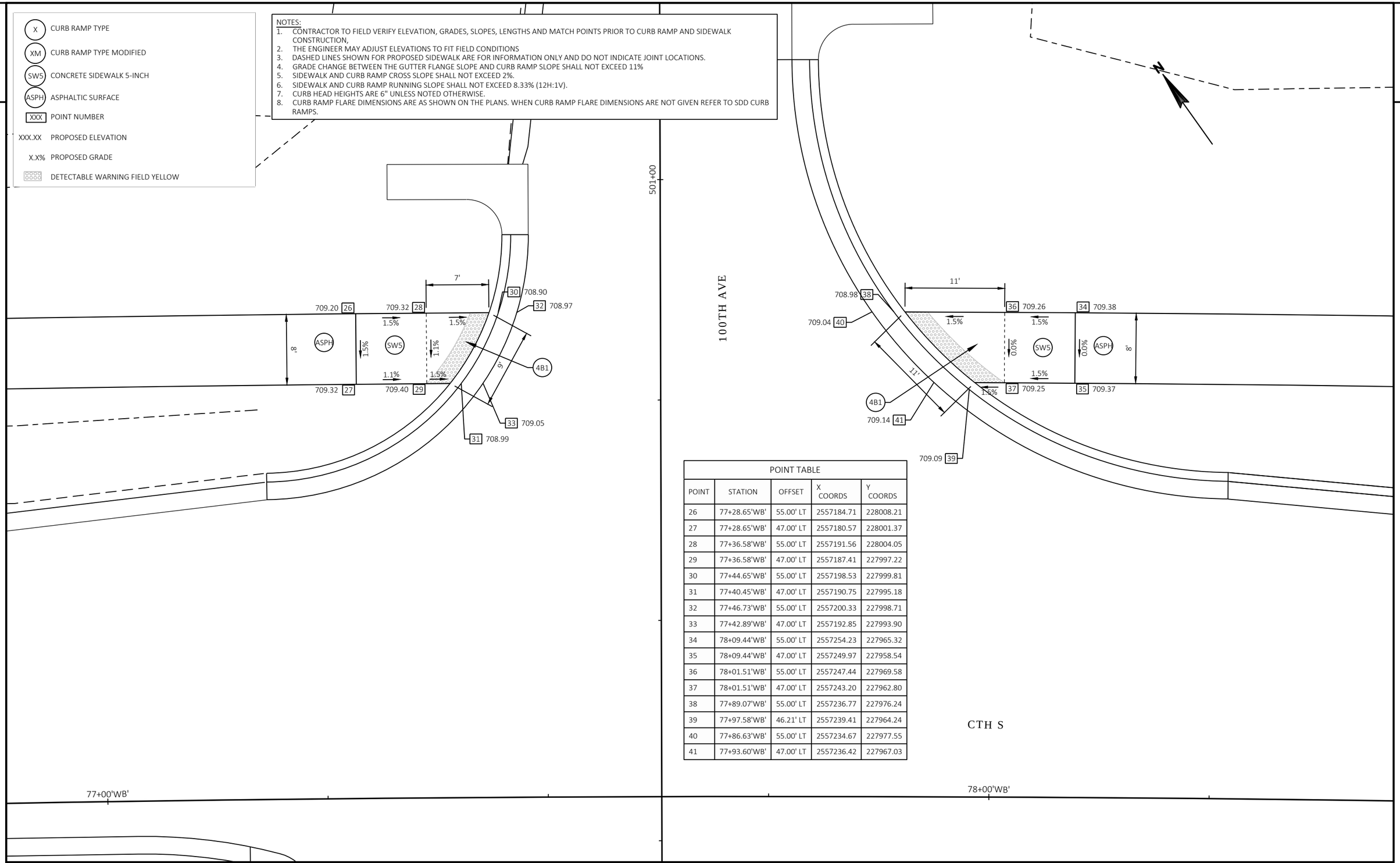

POINT TABLE

POINT	STATION	OFFSET	X COORDS	Y COORDS
26	77+28.65'WB'	55.00' LT	2557184.71	228008.21
27	77+28.65'WB'	47.00' LT	2557180.57	228001.37
28	77+36.58'WB'	55.00' LT	2557191.56	228004.05
29	77+36.58'WB'	47.00' LT	2557187.41	227997.22
30	77+44.65'WB'	55.00' LT	2557198.53	227999.81
31	77+40.45'WB'	47.00' LT	2557190.75	227995.18
32	77+46.73'WB'	55.00' LT	2557200.33	227998.71
33	77+42.89'WB'	47.00' LT	2557192.85	227993.90
34	78+09.44'WB'	55.00' LT	2557254.23	227965.32
35	78+09.44'WB'	47.00' LT	2557249.97	227958.54
36	78+01.51'WB'	55.00' LT	2557247.44	227969.58
37	78+01.51'WB'	47.00' LT	2557243.20	227962.80
38	77+89.07'WB'	55.00' LT	2557236.77	227976.24
39	77+97.58'WB'	46.21' LT	2557239.41	227964.24
40	77+86.63'WB'	55.00' LT	2557234.67	227977.55
41	77+93.60'WB'	47.00' LT	2557236.42	227967.03

NOTES:
1. CONTRACTOR TO FIELD VERIFY ELEVATION, GRADES, SLOPES, LENGTHS AND MATCH POINTS PRIOR TO CURB RAMP AND SIDEWALK CONSTRUCTION,
2. THE ENGINEER MAY ADJUST ELEVATIONS TO FIT FIELD CONDITIONS
3. DASHED LINES SHOWN FOR PROPOSED SIDEWALK ARE FOR INFORMATION ONLY AND DO NOT INDICATE JOINT LOCATIONS.
4. GRADE CHANGE BETWEEN THE GUTTER FLANGE SLOPE AND CURB RAMP SLOPE SHALL NOT EXCEED 11%
5. SIDEWALK AND CURB RAMP CROSS SLOPE SHALL NOT EXCEED 2%.
6. SIDEWALK AND CURB RAMP RUNNING SLOPE SHALL NOT EXCEED 8.33% (12H:1V).
7. CURB HEAD HEIGHTS ARE 6" UNLESS NOTED OTHERWISE.
8. CURB RAMP FLARE DIMENSIONS ARE AS SHOWN ON THE PLANS. WHEN CURB RAMP FLARE DIMENSIONS ARE NOT GIVEN REFER TO SDD CURB RAMPS.

- X — CURB RAMP TYPE
- XM — CURB RAMP TYPE MODIFIED
- SW5 — CONCRETE SIDEWALK 5-INCH
- ASPH — ASPHALTIC SURFACE
- XXX — POINT NUMBER
- XXX.XX — PROPOSED ELEVATION
- X.X% — PROPOSED GRADE
- DETECTABLE WARNING FIELD YELLOW

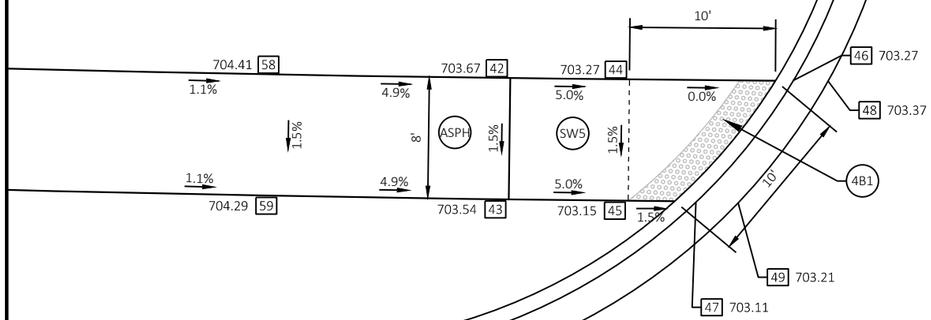

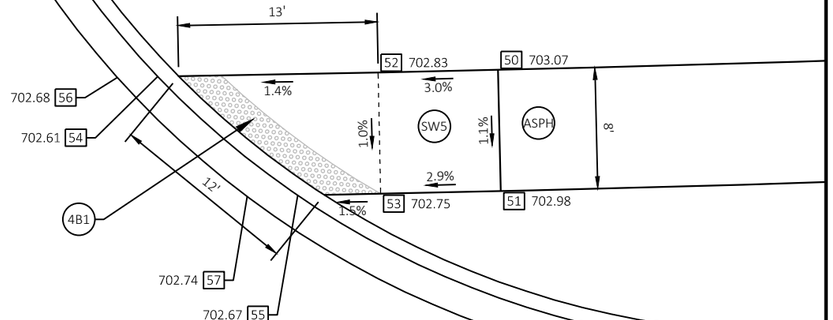

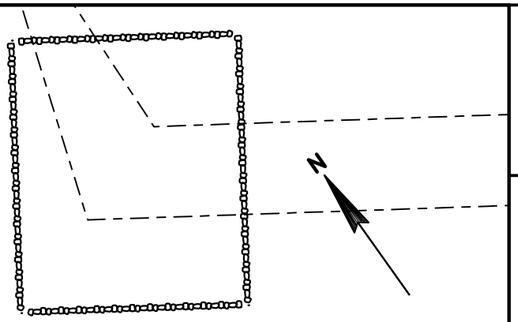

96TH AVE CONNECTOR

611+00

CTH S

CTH S

88+00'WB'

POINT TABLE				
POINT	STATION	OFFSET	X COORDS	Y COORDS
42	87+42.87'WB'	55.00' LT	2558038.25	227472.97
43	87+42.87'WB'	47.00' LT	2558034.82	227465.75
44	87+50.89'WB'	55.00' LT	2558045.36	227469.61
45	87+50.89'WB'	47.00' LT	2558041.95	227462.37
46	87+61.89'WB'	55.00' LT	2558055.14	227465.02
47	87+55.43'WB'	46.95' LT	2558045.98	227460.43
48	87+64.24'WB'	55.00' LT	2558057.22	227464.05
49	87+58.27'WB'	46.94' LT	2558048.50	227459.23
50	88+47.48'WB'	55.00' LT	2558131.73	227430.66
51	88+47.48'WB'	47.00' LT	2558128.56	227423.31
52	88+39.41'WB'	55.00' LT	2558124.46	227433.80
53	88+39.41'WB'	47.00' LT	2558121.28	227426.46
54	88+24.58'WB'	55.00' LT	2558111.14	227439.63
55	88+33.84'WB'	47.00' LT	2558116.25	227428.65
56	88+21.86'WB'	54.98' LT	2558108.69	227440.69
57	88+30.46'WB'	46.99' LT	2558113.20	227429.97
58	87+27.50'WB'	55.00' LT	2558024.65	227479.47
59	87+27.50'WB'	47.00' LT	2558021.18	227472.26

PROJECT NO: RD16-003	HWY: CTH S	COUNTY: KENOSHA	CURB RAMP DETAILS	SHEET 93	E

2

STATION & OFFSET TABLE					
POINT	STATION	OFFSET	Y COORDS	X COORDS	RADIUS
1	27+62.82 'WB'	17.53 RT	230206.95	2552772.52	3'
2	28+23.92 'WB'	29.03 RT	230174.35	2552825.45	3'
3	27+33.40 'WB'	64.00 RT	230174.08	2552728.41	58'
4	27+27.21 'WB'	24.38 LT	230258.83	2552754.25	58'
5	28+58.14 'WB'	72.00 RT	230121.95	2552842.16	58'
6	27+29.24 'WB'	140.61 RT	230104.03	2552697.12	58'
7	28+63.66 'WB'	109.05 RT	230085.33	2552834.20	38'

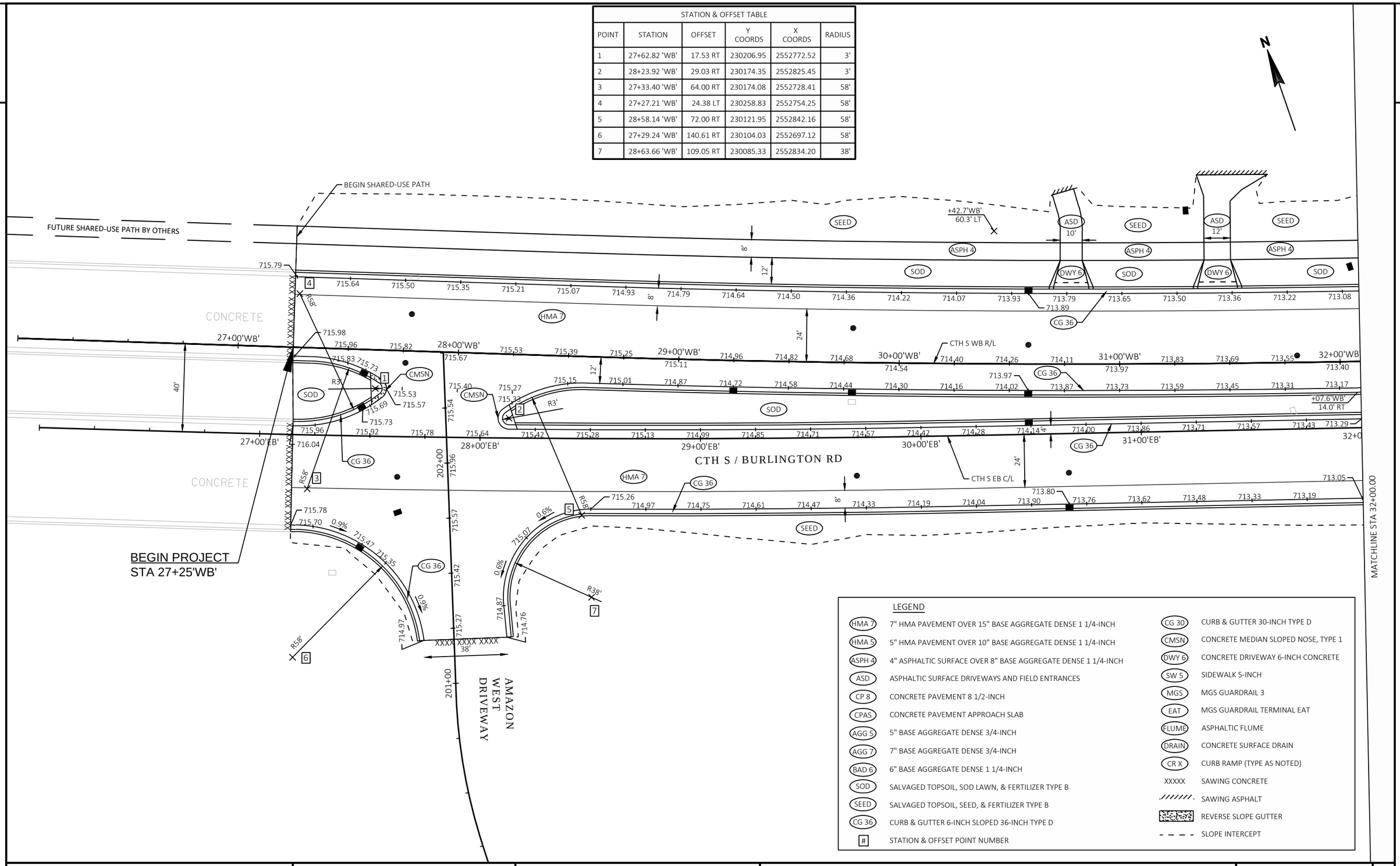

LEGEND

HMA 7	7" HMA PAVEMENT OVER 15" BASE AGGREGATE DENSE 1 1/4-INCH	CG 30	CURB & GUTTER 30-INCH TYPE D
HMA 5	5" HMA PAVEMENT OVER 10" BASE AGGREGATE DENSE 1 1/4-INCH	CMSN	CONCRETE MEDIAN SLOPED NOSE, TYPE 1
ASPH 4	4" ASPHALTIC SURFACE OVER 8" BASE AGGREGATE DENSE 1 1/4-INCH	DWY 6	CONCRETE DRIVEWAY 6-INCH CONCRETE
ASD	ASPHALTIC SURFACE DRIVEWAYS AND FIELD ENTRANCES	SW 5	SIDEWALK 5-INCH
CP 8	CONCRETE PAVEMENT 8 1/2-INCH	MGS	MGS GUARDRAIL 3
CPAS	CONCRETE PAVEMENT APPROACH SLAB	EAT	MGS GUARDRAIL TERMINAL EAT
AGG 5	5" BASE AGGREGATE DENSE 3/4-INCH	FLUME	ASPHALTIC FLUME
AGG 7	7" BASE AGGREGATE DENSE 3/4-INCH	DRAIN	CONCRETE SURFACE DRAIN
BAD 6	6" BASE AGGREGATE DENSE 1 1/4-INCH	CR X	CURB RAMP (TYPE AS NOTED)
SOD	SALVAGED TOPSOIL, SOD LAWN, & FERTILIZER TYPE B	XXXXX	SAWING CONCRETE
SEED	SALVAGED TOPSOIL, SEED, & FERTILIZER TYPE B		SAWING ASPHALT
CG 36	CURB & GUTTER 6-INCH SLOPED 36-INCH TYPE D		REVERSE SLOPE GUTTER
#	STATION & OFFSET POINT NUMBER		SLOPE INTERCEPT

PROJECT NO: RD16-003	HWY: CTH S	COUNTY: KENOSHA	PAVING DETAILS	SHEET 94	E

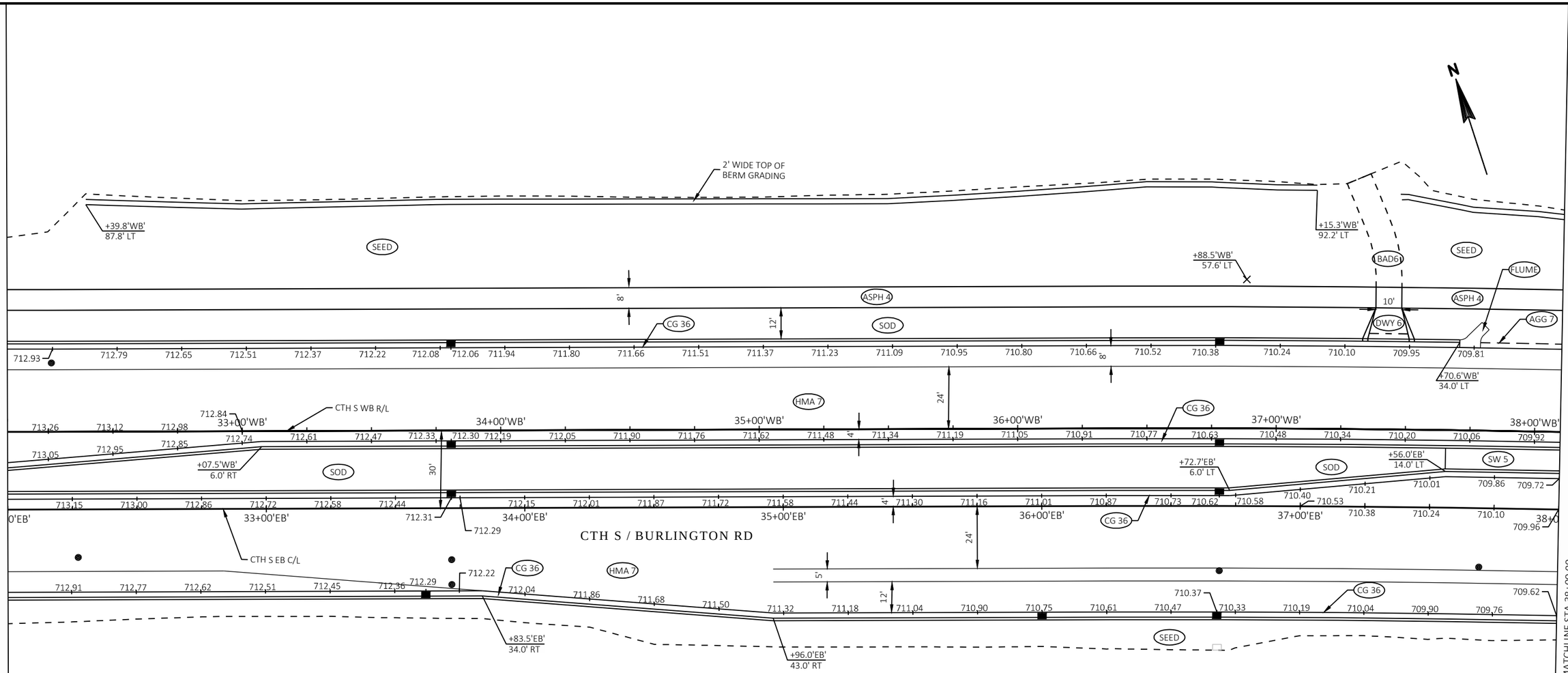

LEGEND

HMA 7	7" HMA PAVEMENT OVER 15" BASE AGGREGATE DENSE 1 1/4-INCH	CG 30	CURB & GUTTER 30-INCH TYPE D
HMA 5	5" HMA PAVEMENT OVER 10" BASE AGGREGATE DENSE 1 1/4-INCH	CMSN	CONCRETE MEDIAN SLOPED NOSE, TYPE 1
ASPH 4	4" ASPHALTIC SURFACE OVER 8" BASE AGGREGATE DENSE 1 1/4-INCH	DWY 6	CONCRETE DRIVEWAY 6-INCH CONCRETE
ASD	ASPHALTIC SURFACE DRIVEWAYS AND FIELD ENTRANCES	SW 5	SIDEWALK 5-INCH
CP 8	CONCRETE PAVEMENT 8 1/2-INCH	MGS	MGS GUARDRAIL 3
CPAS	CONCRETE PAVEMENT APPROACH SLAB	EAT	MGS GUARDRAIL TERMINAL EAT
AGG 5	5" BASE AGGREGATE DENSE 3/4-INCH	FLUME	ASPHALTIC FLUME
AGG 7	7" BASE AGGREGATE DENSE 3/4-INCH	DRAIN	CONCRETE SURFACE DRAIN
BAD 6	6" BASE AGGREGATE DENSE 1 1/4-INCH	CR X	CURB RAMP (TYPE AS NOTED)
SOD	SALVAGED TOPSOIL, SOD LAWN, & FERTILIZER TYPE B	XXXXX	SAWING CONCRETE
SEED	SALVAGED TOPSOIL, SEED, & FERTILIZER TYPE B		SAWING ASPHALT
CG 36	CURB & GUTTER 6-INCH SLOPED 36-INCH TYPE D		REVERSE SLOPE GUTTER
#	STATION & OFFSET POINT NUMBER		SLOPE INTERCEPT

PROJECT NO: RD16-003	HWY: CTH S	COUNTY: KENOSHA	PAVING DETAILS	SHEET 95	E

STATION & OFFSET TABLE					
POINT	STATION	OFFSET	Y COORDS	X COORDS	RADIUS
8	38+79.76 'WB'	11.25 RT	229851.27	2553831.62	5'
9	39+74.86 'WB'	18.96 RT	229811.35	2553918.07	5'
10	38+64.12 'WB'	64.00 RT	229806.86	2553799.16	58'
11	38+66.02 'WB'	42.00 LT	229906.04	2553836.63	58'
12	39+89.51 'WB'	72.00 RT	229756.58	2553913.09	58'
13	39+89.68 'WB'	34.00 LT	229855.73	2553950.55	58'
14	38+57.32 'WB'	131.00 RT	229746.01	2553770.33	58'
15	40+37.04 'WB'	144.00 RT	229672.63	2553931.35	78'

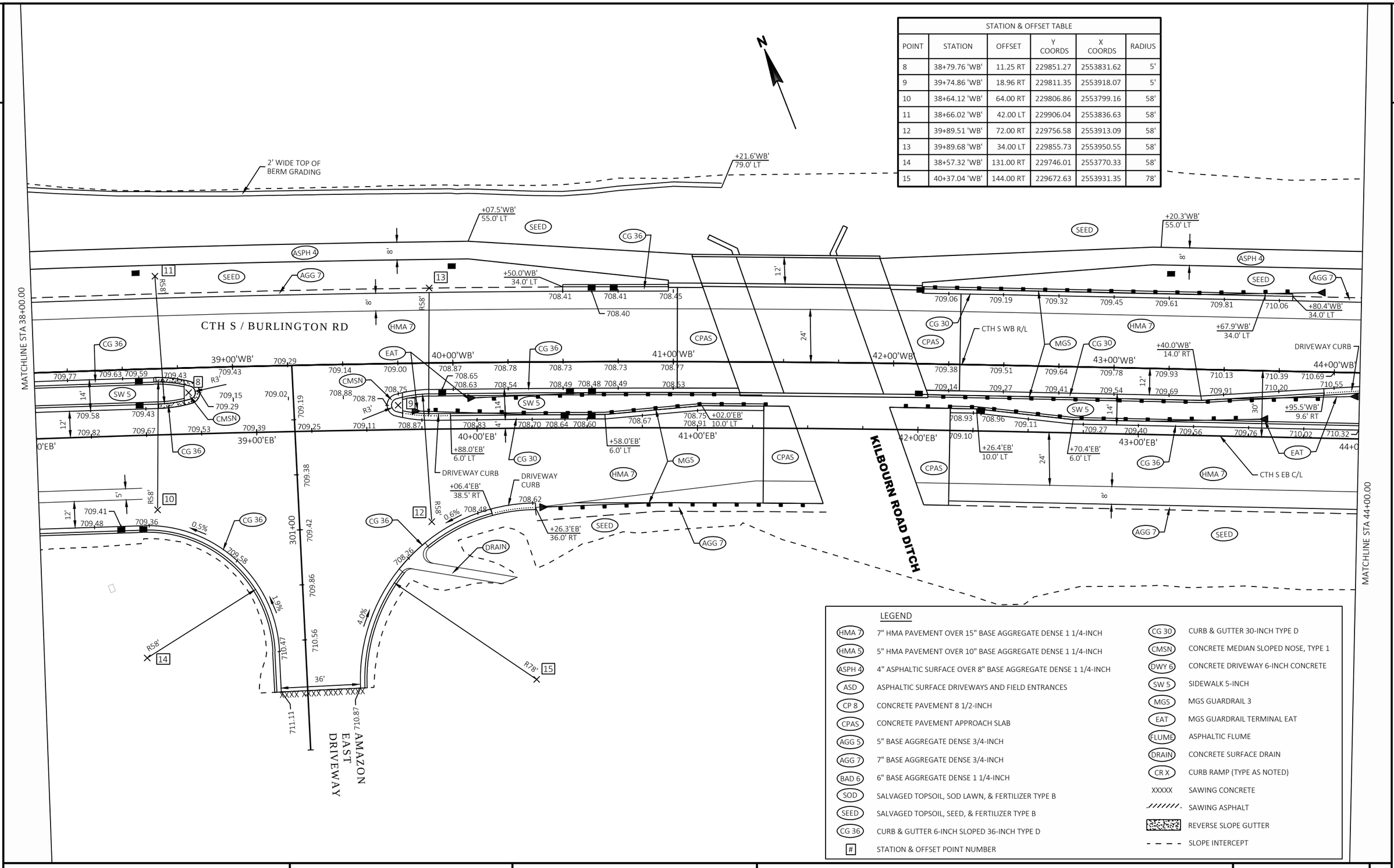

LEGEND

HMA 7	7" HMA PAVEMENT OVER 15" BASE AGGREGATE DENSE 1 1/4-INCH
HMA 5	5" HMA PAVEMENT OVER 10" BASE AGGREGATE DENSE 1 1/4-INCH
ASPH 4	4" ASPHALTIC SURFACE OVER 8" BASE AGGREGATE DENSE 1 1/4-INCH
ASD	ASPHALTIC SURFACE DRIVEWAYS AND FIELD ENTRANCES
CP 8	CONCRETE PAVEMENT 8 1/2-INCH
CPAS	CONCRETE PAVEMENT APPROACH SLAB
AGG 5	5" BASE AGGREGATE DENSE 3/4-INCH
AGG 7	7" BASE AGGREGATE DENSE 3/4-INCH
BAD 6	6" BASE AGGREGATE DENSE 1 1/4-INCH
SOD	SALVAGED TOPSOIL, SOD LAWN, & FERTILIZER TYPE B
SEED	SALVAGED TOPSOIL, SEED, & FERTILIZER TYPE B
CG 36	CURB & GUTTER 6-INCH SLOPED 36-INCH TYPE D
#	STATION & OFFSET POINT NUMBER
CG 30	CURB & GUTTER 30-INCH TYPE D
CMSN	CONCRETE MEDIAN SLOPED NOSE, TYPE 1
DWY 6	CONCRETE DRIVEWAY 6-INCH CONCRETE
SW 5	SIDEWALK 5-INCH
MGS	MGS GUARDRAIL 3
EAT	MGS GUARDRAIL TERMINAL EAT
FLUME	ASPHALTIC FLUME
DRAIN	CONCRETE SURFACE DRAIN
CR X	CURB RAMP (TYPE AS NOTED)
XXXXX	SAWING CONCRETE
	SAWING ASPHALT
	REVERSE SLOPE GUTTER
	SLOPE INTERCEPT

PROJECT NO: RD16-003	HWY: CTH S	COUNTY: KENOSHA	PAVING DETAILS	SHEET 96	E

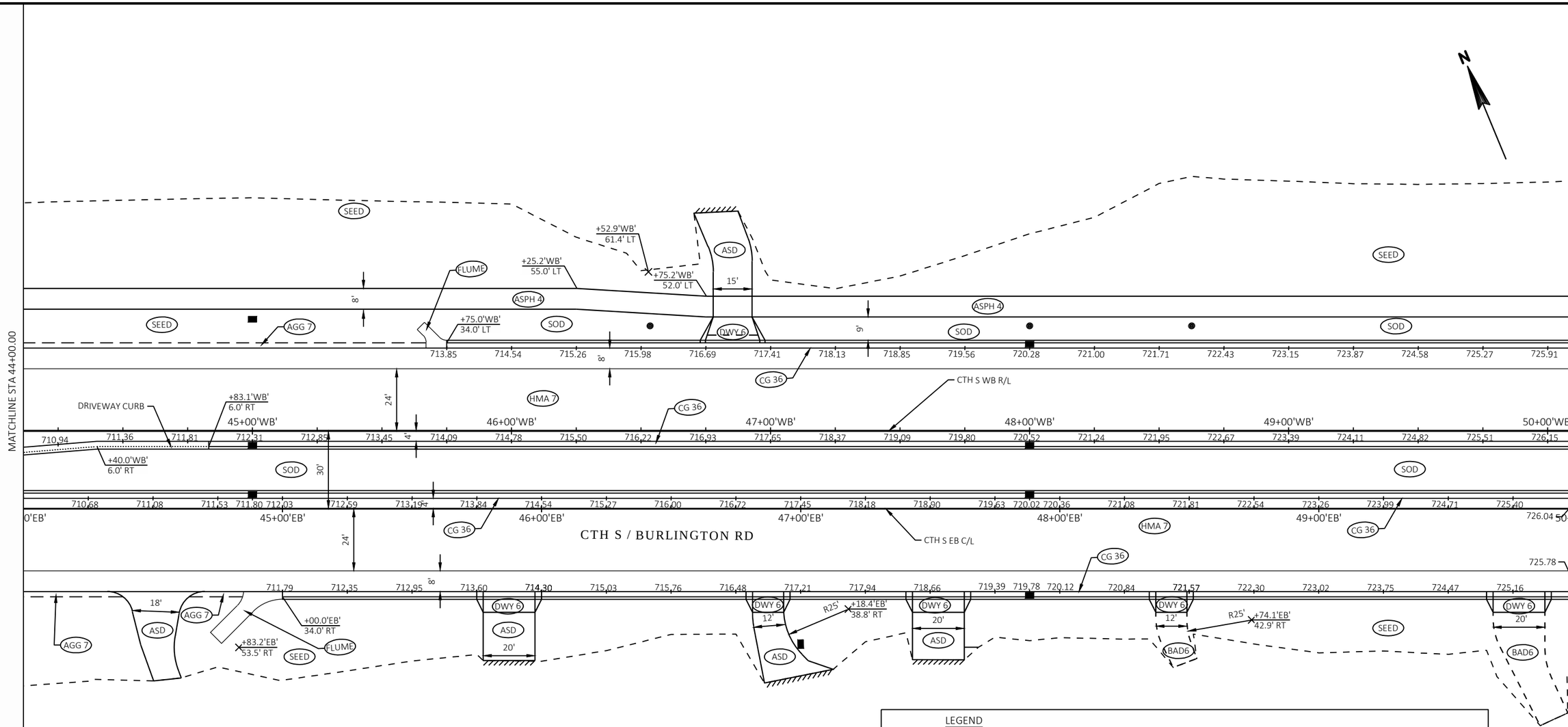

LEGEND

HMA 7	7" HMA PAVEMENT OVER 15" BASE AGGREGATE DENSE 1 1/4-INCH
HMA 5	5" HMA PAVEMENT OVER 10" BASE AGGREGATE DENSE 1 1/4-INCH
ASPH 4	4" ASPHALTIC SURFACE OVER 8" BASE AGGREGATE DENSE 1 1/4-INCH
ASD	ASPHALTIC SURFACE DRIVEWAYS AND FIELD ENTRANCES
CP 8	CONCRETE PAVEMENT 8 1/2-INCH
CPAS	CONCRETE PAVEMENT APPROACH SLAB
AGG 5	5" BASE AGGREGATE DENSE 3/4-INCH
AGG 7	7" BASE AGGREGATE DENSE 3/4-INCH
BAD 6	6" BASE AGGREGATE DENSE 1 1/4-INCH
SOD	SALVAGED TOPSOIL, SOD LAWN, & FERTILIZER TYPE B
SEED	SALVAGED TOPSOIL, SEED, & FERTILIZER TYPE B
CG 36	CURB & GUTTER 6-INCH SLOPED 36-INCH TYPE D
#	STATION & OFFSET POINT NUMBER
CG 30	CURB & GUTTER 30-INCH TYPE D
CMSN	CONCRETE MEDIAN SLOPED NOSE, TYPE 1
DWY 6	CONCRETE DRIVEWAY 6-INCH CONCRETE
SW 5	SIDEWALK 5-INCH
MGS	MGS GUARDRAIL 3
EAT	MGS GUARDRAIL TERMINAL EAT
FLUME	ASPHALTIC FLUME
DRAIN	CONCRETE SURFACE DRAIN
CR X	CURB RAMP (TYPE AS NOTED)
XXXXX	SAWING CONCRETE
	SAWING ASPHALT
	REVERSE SLOPE GUTTER
	SLOPE INTERCEPT

PROJECT NO: RD16-003 | HWY: CTH S | COUNTY: KENOSHA | PAVING DETAILS | SHEET 97 | E

FILE NAME : T:\1165811\CIVIL3D\1165811\SHEETSPLAN\021201-PD.DWG
LAYOUT NAME - 4
PLOT DATE : 5/11/2020 12:49 PM PLOT BY : GUILLAMA, TINA PLOT NAME : PLOT SCALE : 1 IN:40 FT
WISDOT/CADDS SHEET 42

2

2

CTH S WB SUPERELEVATION DATA

	STATION	OUTSIDE SHOULDER	OUTSIDE LANE	INSIDE LANE	INSIDE SHOULDER
NORMAL CROWN	50+13.43'WB'	-4.0%	-2.0%	-2.0%	-2.0%
LEVEL CROWN	50+85.15'WB'	0.0%	0.0%	-2.0%	-2.0%
REVERSE CROWN	51+56.87'WB'	+2.0%	+2.0%	-2.0%	-2.0%
BEGIN FULL FULL SUPERELEVATION	51+89.15'WB'	+2.9%	+2.9%	-2.9%	-2.9%
END FULL SUPERELEVATION	57+65.49'WB'	+2.9%	+2.9%	-2.9%	-2.9%
REVERSE CROWN	57+97.76'WB'	+2.0%	+2.0%	-2.0%	-2.0%
LEVEL CROWN	58+69.49'WB'	0.0%	0.0%	-2.0%	-2.0%
NORMAL CROWN	59+41.21'WB'	-4.0%	-2.0%	-2.0%	-2.0%

CTH S EB SUPERELEVATION DATA

	STATION	INSIDE SHOULDER	INSIDE LANE	OUTSIDE LANE	OUTSIDE SHOULDER
NORMAL CROWN	50+01.80'EB'	-2.0%	-2.0%	-2.0%	-4.0%
LEVEL CROWN	50+73.53'EB'	0.0%	0.0%	-2.0%	-4.0%
REVERSE CROWN	51+45.25'EB'	+2.0%	+2.0%	-2.0%	-4.0%
BEGIN FULL FULL SUPERELEVATION	51+77.53'EB'	+2.9%	+2.9%	-2.9%	-4.0%
END FULL SUPERELEVATION	57+46.31'EB'	+2.9%	+2.9%	-2.9%	-4.0%
REVERSE CROWN	57+78.58'EB'	+2.0%	+2.0%	-2.0%	-4.0%
LEVEL CROWN	58+50.31'EB'	0.0%	0.0%	-2.0%	-4.0%
NORMAL CROWN	59+22.03'EB'	-2.0%	-2.0%	-2.0%	-4.0%

LEGEND

HMA 7	7" HMA PAVEMENT OVER 15" BASE AGGREGATE DENSE 1 1/4-INCH
HMA 5	5" HMA PAVEMENT OVER 10" BASE AGGREGATE DENSE 1 1/4-INCH
ASPH 4	4" ASPHALTIC SURFACE OVER 8" BASE AGGREGATE DENSE 1 1/4-INCH
ASD	ASPHALTIC SURFACE DRIVEWAYS AND FIELD ENTRANCES
CP 8	CONCRETE PAVEMENT 8 1/2-INCH
CPAS	CONCRETE PAVEMENT APPROACH SLAB
AGG 5	5" BASE AGGREGATE DENSE 3/4-INCH
AGG 7	7" BASE AGGREGATE DENSE 3/4-INCH
BAD 6	6" BASE AGGREGATE DENSE 1 1/4-INCH
SOD	SALVAGED TOPSOIL, SOD LAWN, & FERTILIZER TYPE B
SEED	SALVAGED TOPSOIL, SEED, & FERTILIZER TYPE B
CG 36	CURB & GUTTER 6-INCH SLOPED 36-INCH TYPE D
#	STATION & OFFSET POINT NUMBER
CG 30	CURB & GUTTER 30-INCH TYPE D
CMSN	CONCRETE MEDIAN SLOPED NOSE, TYPE 1
DWY 6	CONCRETE DRIVEWAY 6-INCH CONCRETE
SW 5	SIDEWALK 5-INCH
MGS	MGS GUARDRAIL 3
EAT	MGS GUARDRAIL TERMINAL EAT
FLUME	ASPHALTIC FLUME
DRAIN	CONCRETE SURFACE DRAIN
CR X	CURB RAMP (TYPE AS NOTED)
XXXXX	SAWING CONCRETE
	SAWING ASPHALT
	REVERSE SLOPE GUTTER
	SLOPE INTERCEPT

PROJECT NO: RD16-003	HWY: CTH S	COUNTY: KENOSHA	PAVING DETAILS	SHEET 98	E

FILE NAME : T:\1165811\CIVIL3D\1165811\SHEETSPLAN\021201-PD.DWG
LAYOUT NAME - 5

PLOT DATE : 5/11/2020 12:49 PM PLOT BY : GUILLAMA, TINA PLOT NAME : PLOT SCALE : 1 IN:40 FT

WISDOT/CADDS SHEET 42

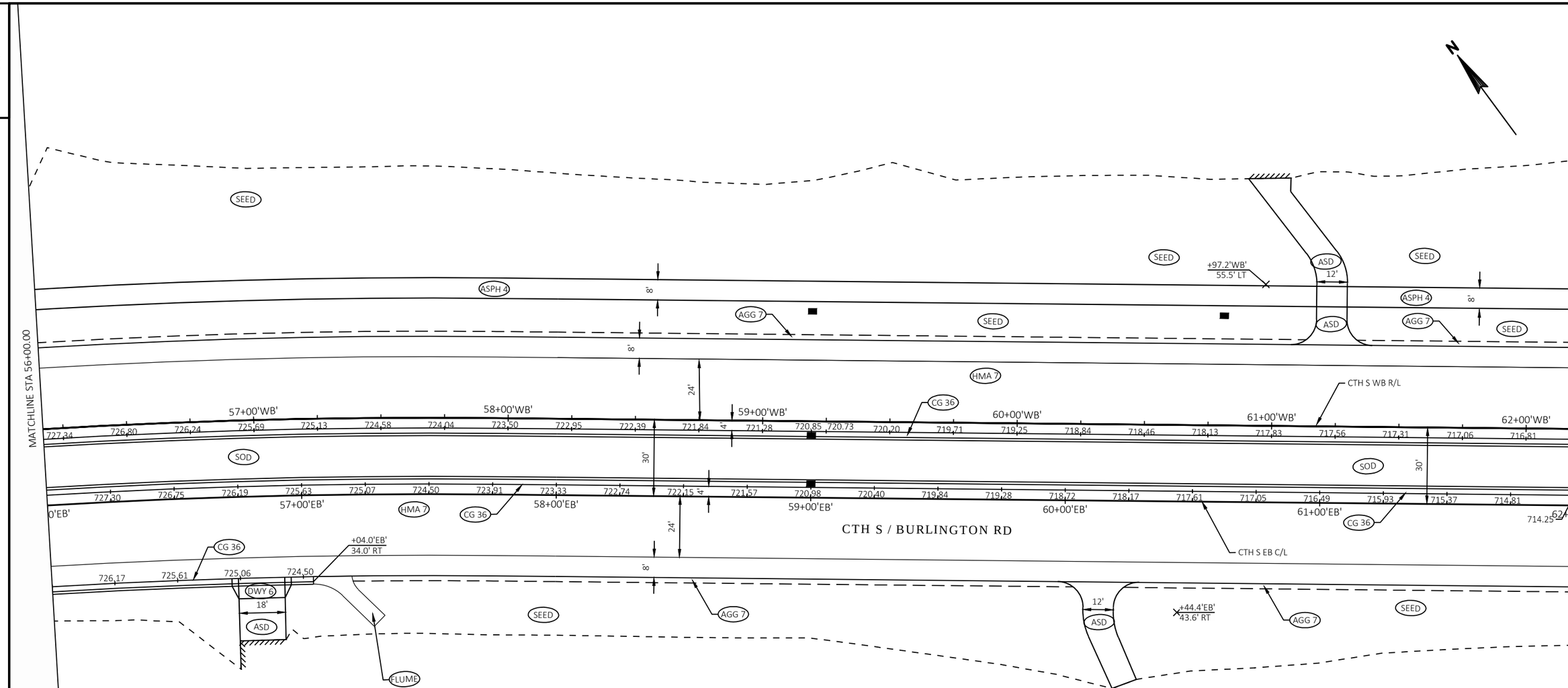

LEGEND

HMA 7	7" HMA PAVEMENT OVER 15" BASE AGGREGATE DENSE 1 1/4-INCH	CG 30	CURB & GUTTER 30-INCH TYPE D
HMA 5	5" HMA PAVEMENT OVER 10" BASE AGGREGATE DENSE 1 1/4-INCH	CMSN	CONCRETE MEDIAN SLOPED NOSE, TYPE 1
ASPH 4	4" ASPHALTIC SURFACE OVER 8" BASE AGGREGATE DENSE 1 1/4-INCH	DWY 6	CONCRETE DRIVEWAY 6-INCH CONCRETE
ASD	ASPHALTIC SURFACE DRIVEWAYS AND FIELD ENTRANCES	SW 5	SIDEWALK 5-INCH
CP 8	CONCRETE PAVEMENT 8 1/2-INCH	MGS	MGS GUARDRAIL 3
CPAS	CONCRETE PAVEMENT APPROACH SLAB	EAT	MGS GUARDRAIL TERMINAL EAT
AGG 5	5" BASE AGGREGATE DENSE 3/4-INCH	FLUME	ASPHALTIC FLUME
AGG 7	7" BASE AGGREGATE DENSE 3/4-INCH	DRAIN	CONCRETE SURFACE DRAIN
BAD 6	6" BASE AGGREGATE DENSE 1 1/4-INCH	CR X	CURB RAMP (TYPE AS NOTED)
SOD	SALVAGED TOPSOIL, SOD LAWN, & FERTILIZER TYPE B	XXXXX	SAWING CONCRETE
SEED	SALVAGED TOPSOIL, SEED, & FERTILIZER TYPE B		SAWING ASPHALT
CG 36	CURB & GUTTER 6-INCH SLOPED 36-INCH TYPE D		REVERSE SLOPE GUTTER
#	STATION & OFFSET POINT NUMBER		SLOPE INTERCEPT

PROJECT NO: RD16-003	HWY: CTH S	COUNTY: KENOSHA	PAVING DETAILS	SHEET 99	E

2

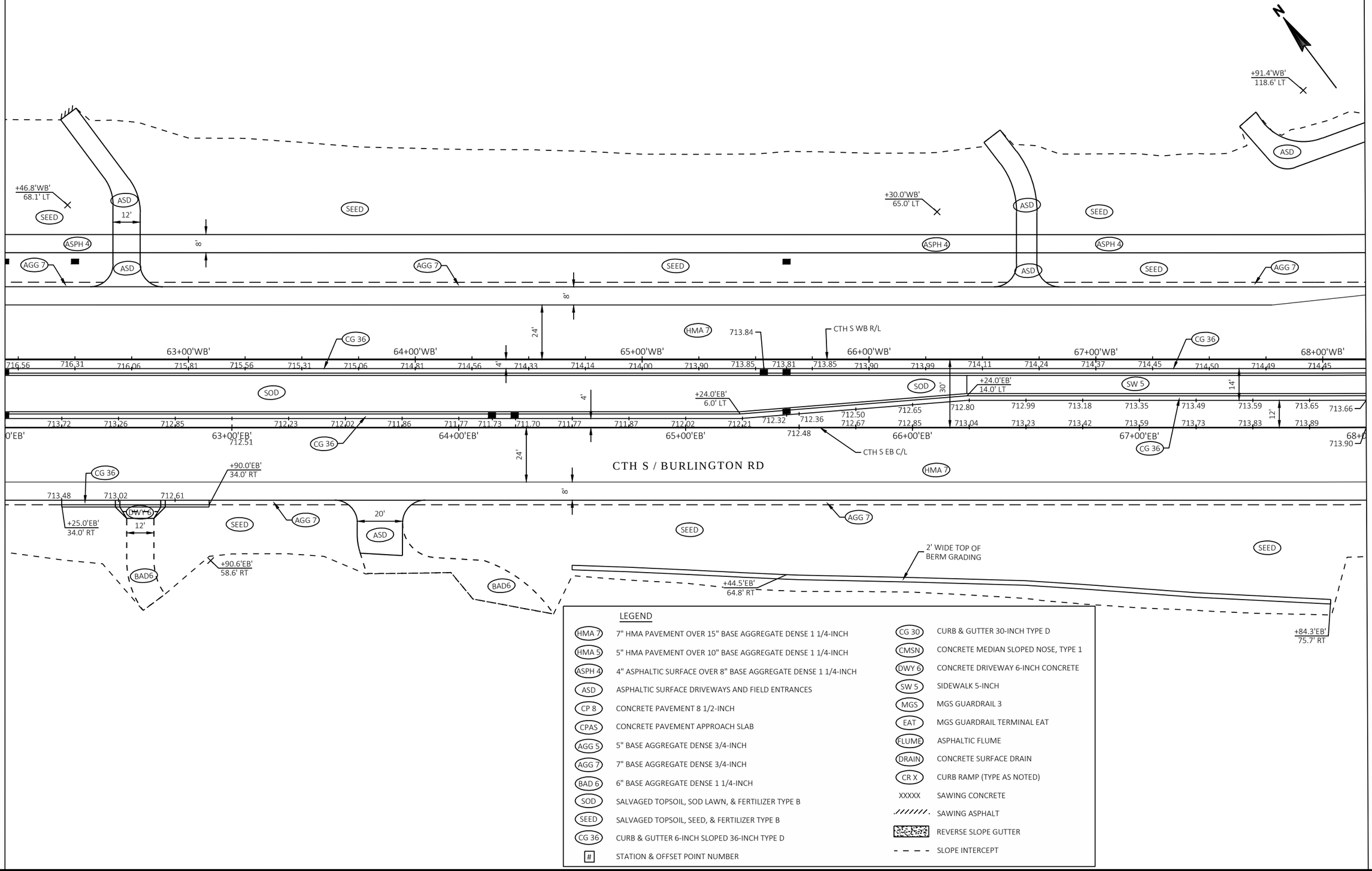

LEGEND

HMA 7	7" HMA PAVEMENT OVER 15" BASE AGGREGATE DENSE 1 1/4-INCH
HMA 5	5" HMA PAVEMENT OVER 10" BASE AGGREGATE DENSE 1 1/4-INCH
ASPH 4	4" ASPHALTIC SURFACE OVER 8" BASE AGGREGATE DENSE 1 1/4-INCH
ASD	ASPHALTIC SURFACE DRIVEWAYS AND FIELD ENTRANCES
CP 8	CONCRETE PAVEMENT 8 1/2-INCH
CPAS	CONCRETE PAVEMENT APPROACH SLAB
AGG 5	5" BASE AGGREGATE DENSE 3/4-INCH
AGG 7	7" BASE AGGREGATE DENSE 3/4-INCH
BAD 6	6" BASE AGGREGATE DENSE 1 1/4-INCH
SOD	SALVAGED TOPSOIL, SOD LAWN, & FERTILIZER TYPE B
SEED	SALVAGED TOPSOIL, SEED, & FERTILIZER TYPE B
CG 36	CURB & GUTTER 6-INCH SLOPED 36-INCH TYPE D
#	STATION & OFFSET POINT NUMBER
CG 30	CURB & GUTTER 30-INCH TYPE D
CMSN	CONCRETE MEDIAN SLOPED NOSE, TYPE 1
DWY 6	CONCRETE DRIVEWAY 6-INCH CONCRETE
SW 5	SIDEWALK 5-INCH
MGS	MGS GUARDRAIL 3
EAT	MGS GUARDRAIL TERMINAL EAT
FLUME	ASPHALTIC FLUME
DRAIN	CONCRETE SURFACE DRAIN
CR X	CURB RAMP (TYPE AS NOTED)
XXXXX	SAWING CONCRETE
	SAWING ASPHALT
	REVERSE SLOPE GUTTER
	SLOPE INTERCEPT

PROJECT NO: RD16-003	HWY: CTH S	COUNTY: KENOSHA	PAVING DETAILS	SHEET 100 E

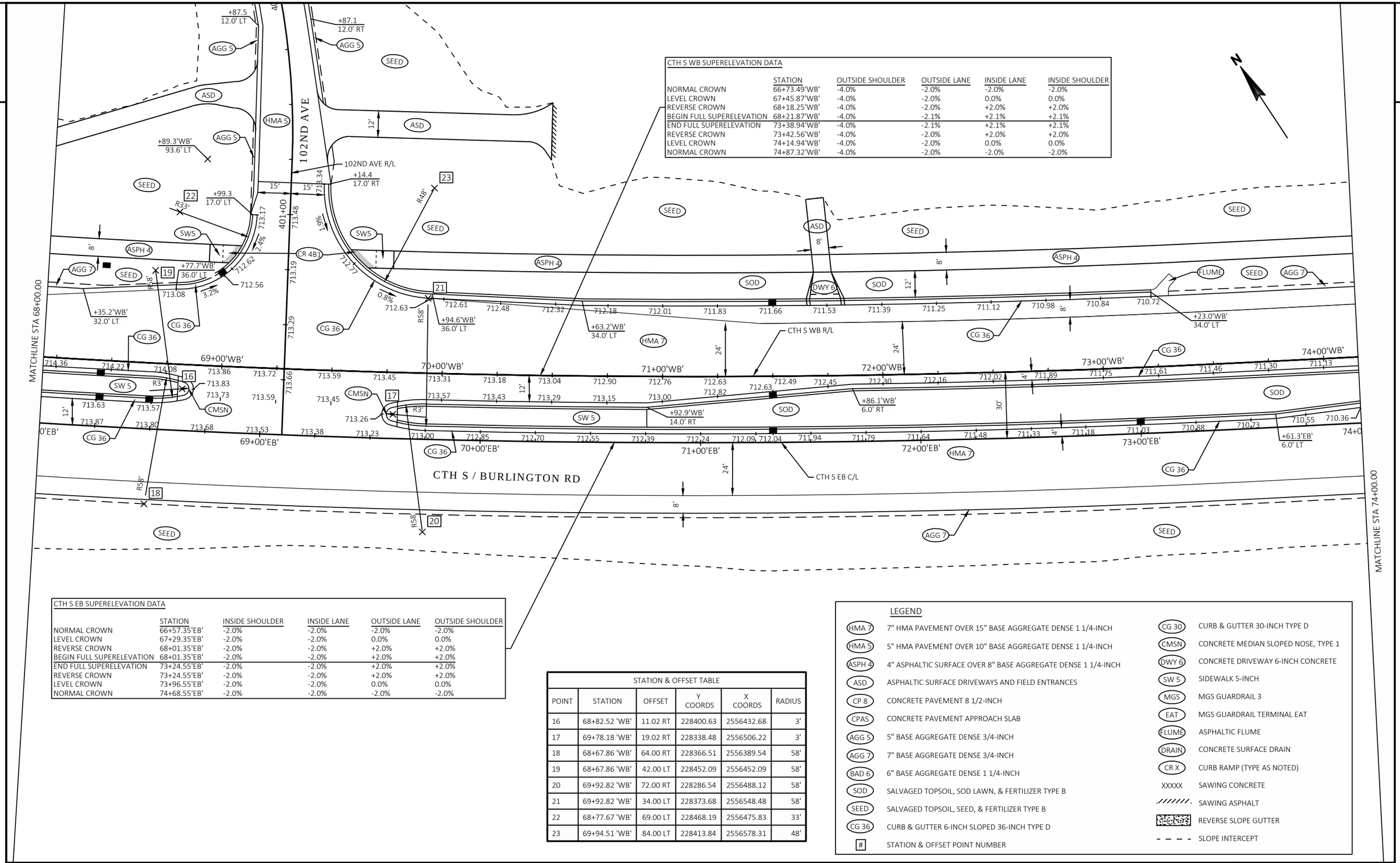

CTH S WB SUPERELEVATION DATA

	STATION	OUTSIDE SHOULDER	OUTSIDE LANE	INSIDE LANE	INSIDE SHOULDER
NORMAL CROWN	66+73.49'WB'	-4.0%	-2.0%	-2.0%	-2.0%
LEVEL CROWN	67+45.87'WB'	-4.0%	-2.0%	0.0%	0.0%
REVERSE CROWN	68+18.25'WB'	-4.0%	-2.0%	+2.0%	+2.0%
BEGIN FULL SUPERELEVATION	68+21.87'WB'	-4.0%	-2.1%	+2.1%	+2.1%
END FULL SUPERELEVATION	73+38.94'WB'	-4.0%	-2.1%	+2.1%	+2.1%
REVERSE CROWN	73+42.56'WB'	-4.0%	-2.0%	+2.0%	+2.0%
LEVEL CROWN	74+14.94'WB'	-4.0%	-2.0%	0.0%	0.0%
NORMAL CROWN	74+87.32'WB'	-4.0%	-2.0%	-2.0%	-2.0%

CTH S EB SUPERELEVATION DATA

	STATION	INSIDE SHOULDER	INSIDE LANE	OUTSIDE LANE	OUTSIDE SHOULDER
NORMAL CROWN	66+57.35'EB'	-2.0%	-2.0%	-2.0%	-2.0%
LEVEL CROWN	67+29.35'EB'	-2.0%	-2.0%	0.0%	0.0%
REVERSE CROWN	68+01.35'EB'	-2.0%	-2.0%	+2.0%	+2.0%
BEGIN FULL SUPERELEVATION	68+01.35'EB'	-2.0%	-2.0%	+2.0%	+2.0%
END FULL SUPERELEVATION	73+24.55'EB'	-2.0%	-2.0%	+2.0%	+2.0%
REVERSE CROWN	73+24.55'EB'	-2.0%	-2.0%	+2.0%	+2.0%
LEVEL CROWN	73+96.55'EB'	-2.0%	-2.0%	0.0%	0.0%
NORMAL CROWN	74+68.55'EB'	-2.0%	-2.0%	-2.0%	-2.0%

STATION & OFFSET TABLE

POINT	STATION	OFFSET	Y COORDS	X COORDS	RADIUS
16	68+82.52 'WB'	11.02 RT	228400.63	2556432.68	3'
17	69+78.18 'WB'	19.02 RT	228338.48	2556506.22	3'
18	68+67.86 'WB'	64.00 RT	228366.51	2556389.54	58'
19	68+67.86 'WB'	42.00 LT	228452.09	2556452.09	58'
20	69+92.82 'WB'	72.00 RT	228286.54	2556488.12	58'
21	69+92.82 'WB'	34.00 LT	228373.68	2556548.48	58'
22	68+77.67 'WB'	69.00 LT	228468.19	2556475.83	33'
23	69+94.51 'WB'	84.00 LT	228413.84	2556578.31	48'

LEGEND

HMA 7	7" HMA PAVEMENT OVER 15" BASE AGGREGATE DENSE 1 1/4-INCH
HMA 5	5" HMA PAVEMENT OVER 10" BASE AGGREGATE DENSE 1 1/4-INCH
ASPH 4	4" ASPHALTIC SURFACE OVER 8" BASE AGGREGATE DENSE 1 1/4-INCH
ASD	ASPHALTIC SURFACE DRIVEWAYS AND FIELD ENTRANCES
CP 8	CONCRETE PAVEMENT 8 1/2-INCH
CPAS	CONCRETE PAVEMENT APPROACH SLAB
AGG 5	5" BASE AGGREGATE DENSE 3/4-INCH
AGG 7	7" BASE AGGREGATE DENSE 3/4-INCH
BAD 6	6" BASE AGGREGATE DENSE 1 1/4-INCH
SOD	SALVAGED TOPSOIL, SOD LAWN, & FERTILIZER TYPE B
SEED	SALVAGED TOPSOIL, SEED, & FERTILIZER TYPE B
CG 36	CURB & GUTTER 6-INCH SLOPED 36-INCH TYPE D
#	STATION & OFFSET POINT NUMBER
CG 30	CURB & GUTTER 30-INCH TYPE D
CMSN	CONCRETE MEDIAN SLOPED NOSE, TYPE 1
DWY 6	CONCRETE DRIVEWAY 6-INCH CONCRETE
SW 5	SIDEWALK 5-INCH
MGS	MGS GUARDRAIL 3
EAT	MGS GUARDRAIL TERMINAL EAT
FLUME	ASPHALTIC FLUME
DRAIN	CONCRETE SURFACE DRAIN
CR X	CURB RAMP (TYPE AS NOTED)
XXXXX	SAWING CONCRETE
	SAWING ASPHALT
	REVERSE SLOPE GUTTER
	SLOPE INTERCEPT

PROJECT NO: RD16-003	HWY: CTH S	COUNTY: KENOSHA	PAVING DETAILS	SHEET 101	E

FILE NAME : T:\1165811\CIVIL3D\1165811\SHEETSPLAN\021201-PD.DWG
LAYOUT NAME - 8

PLOT DATE : 5/11/2020 12:50 PM PLOT BY : GUILLAMA, TINA PLOT NAME : PLOT SCALE : 1 IN:40 FT

WISDOT/CADDS SHEET 42

2

CTH S WB SUPERELEVATION DATA

	STATION	OUTSIDE SHOULDER	OUTSIDE LANE	INSIDE LANE	INSIDE SHOULDER
NORMAL CROWN	75+37.82'WB'	-4.0%	-2.0%	-2.0%	-2.0%
LEVEL CROWN	76+09.82'WB'	0.0%	0.0%	-2.0%	-2.0%
REVERSE CROWN	76+81.82'WB'	+2.0%	+2.0%	-2.0%	-2.0%
BEGIN FULL SUPERELEVATION	76+81.82'WB'	+2.0%	+2.0%	-2.0%	-2.0%
END FULL SUPERELEVATION	80+19.78'WB'	+2.0%	+2.0%	-2.0%	-2.0%

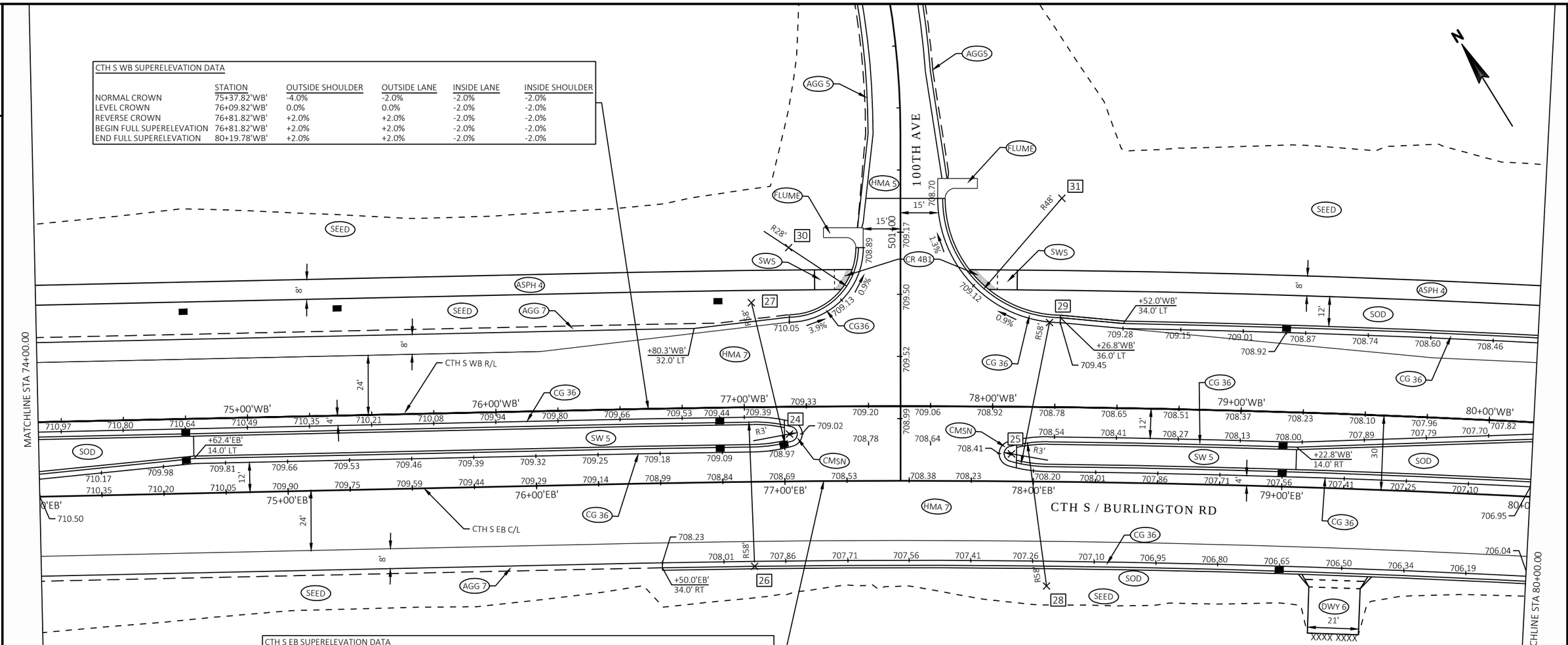

CTH S EB SUPERELEVATION DATA

	STATION	INSIDE SHOULDER	INSIDE LANE	OUTSIDE LANE	OUTSIDE SHOULDER
NORMAL CROWN	75+19.05'EB'	-2.0%	-2.0%	-2.0%	-4.0%
LEVEL CROWN	75+91.43'EB'	0.0%	0.0%	-2.0%	-4.0%
REVERSE CROWN	76+63.82'EB'	+2.0%	+2.0%	-2.0%	-4.0%
BEGIN FULL SUPERELEVATION	76+67.43'EB'	+2.1%	+2.1%	-2.1%	-4.0%
END FULL SUPERELEVATION	80+00.38'EB'	+2.1%	+2.1%	-2.1%	-4.0%

STATION & OFFSET TABLE

POINT	STATION	OFFSET	Y COORDS	X COORDS	RADIUS
24	77+18.11 'WB'	10.98 RT	227957.22	2557141.53	3'
25	78+07.72 'WB'	18.98 RT	227903.59	2557213.42	3'
26	77+03.38 'WB'	64.00 RT	227919.30	2557101.69	58'
27	77+03.38 'WB'	42.00 LT	228010.24	2557156.15	58'
28	78+22.47 'WB'	72.00 RT	227850.94	2557197.53	58'
29	78+22.47 'WB'	34.00 LT	227940.54	2557254.16	58'
30	77+18.45 'WB'	64.00 LT	228021.25	2557180.53	28'
31	78+26.79 'WB'	84.00 LT	227980.46	2557284.58	48'

LEGEND

HMA 7	7" HMA PAVEMENT OVER 15" BASE AGGREGATE DENSE 1 1/4-INCH
HMA 5	5" HMA PAVEMENT OVER 10" BASE AGGREGATE DENSE 1 1/4-INCH
ASPH 4	4" ASPHALTIC SURFACE OVER 8" BASE AGGREGATE DENSE 1 1/4-INCH
ASD	ASPHALTIC SURFACE DRIVEWAYS AND FIELD ENTRANCES
CP 8	CONCRETE PAVEMENT 8 1/2-INCH
CPAS	CONCRETE PAVEMENT APPROACH SLAB
AGG 5	5" BASE AGGREGATE DENSE 3/4-INCH
AGG 7	7" BASE AGGREGATE DENSE 3/4-INCH
BAD 6	6" BASE AGGREGATE DENSE 1 1/4-INCH
SOD	SALVAGED TOPSOIL, SOD LAWN, & FERTILIZER TYPE B
SEED	SALVAGED TOPSOIL, SEED, & FERTILIZER TYPE B
CG 36	CURB & GUTTER 6-INCH SLOPED 36-INCH TYPE D
#	STATION & OFFSET POINT NUMBER
CG 30	CURB & GUTTER 30-INCH TYPE D
CMSN	CONCRETE MEDIAN SLOPED NOSE, TYPE 1
DWY 6	CONCRETE DRIVEWAY 6-INCH CONCRETE
SW 5	SIDEWALK 5-INCH
MGS	MGS GUARDRAIL 3
EAT	MGS GUARDRAIL TERMINAL EAT
FLUME	ASPHALTIC FLUME
DRAIN	CONCRETE SURFACE DRAIN
CR X	CURB RAMP (TYPE AS NOTED)
XXXXX	SAWING CONCRETE
	SAWING ASPHALT
	REVERSE SLOPE GUTTER
	SLOPE INTERCEPT

PROJECT NO: RD16-003	HWY: CTH S	COUNTY: KENOSHA	PAVING DETAILS	SHEET 102	E

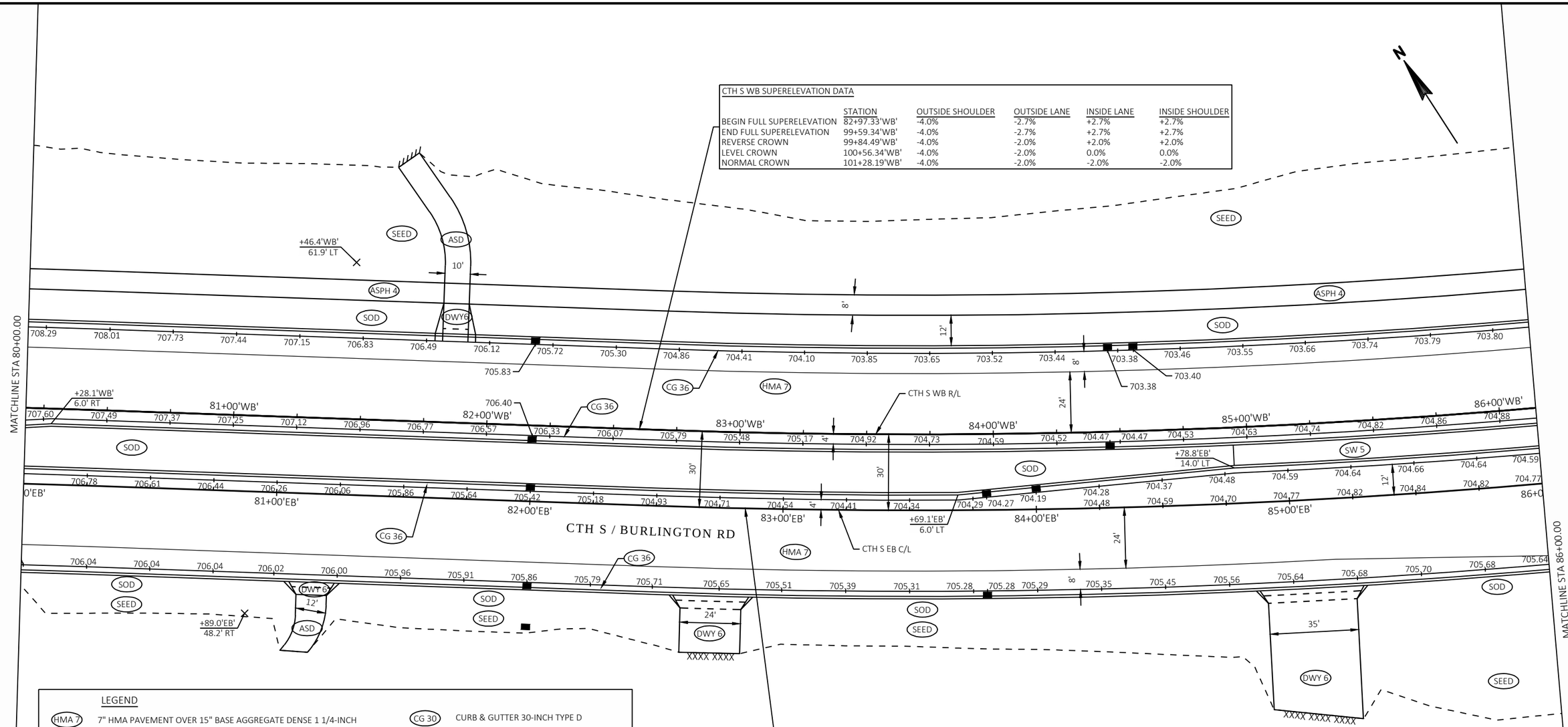

CTH S WB SUPERELEVATION DATA

	STATION	OUTSIDE SHOULDER	OUTSIDE LANE	INSIDE LANE	INSIDE SHOULDER
BEGIN FULL SUPERELEVATION	82+97.33'WB'	-4.0%	-2.7%	+2.7%	+2.7%
END FULL SUPERELEVATION	99+59.34'WB'	-4.0%	-2.7%	+2.7%	+2.7%
REVERSE CROWN	99+84.49'WB'	-4.0%	-2.0%	+2.0%	+2.0%
LEVEL CROWN	100+56.34'WB'	-4.0%	-2.0%	0.0%	0.0%
NORMAL CROWN	101+28.19'WB'	-4.0%	-2.0%	-2.0%	-2.0%

CTH S EB SUPERELEVATION DATA

	STATION	INSIDE SHOULDER	INSIDE LANE	OUTSIDE LANE	OUTSIDE SHOULDER
BEGIN FULL SUPERELEVATION	82+81.84'EB'	-2.7%	-2.7%	+2.7%	+2.7%
END FULL SUPERELEVATION	99+62.80'EB'	-2.7%	-2.7%	+2.7%	+2.7%
REVERSE CROWN	99+87.95'EB'	-2.0%	-2.0%	+2.0%	+2.0%
LEVEL CROWN	100+59.80'EB'	-2.0%	-2.0%	0.0%	0.0%
NORMAL CROWN	101+31.66'EB'	-2.0%	-2.0%	-2.0%	-4.0%

LEGEND

HMA 7	7" HMA PAVEMENT OVER 15" BASE AGGREGATE DENSE 1 1/4-INCH
HMA 5	5" HMA PAVEMENT OVER 10" BASE AGGREGATE DENSE 1 1/4-INCH
ASPH 4	4" ASPHALTIC SURFACE OVER 8" BASE AGGREGATE DENSE 1 1/4-INCH
ASD	ASPHALTIC SURFACE DRIVEWAYS AND FIELD ENTRANCES
CP 8	CONCRETE PAVEMENT 8 1/2-INCH
CPAS	CONCRETE PAVEMENT APPROACH SLAB
AGG 5	5" BASE AGGREGATE DENSE 3/4-INCH
AGG 7	7" BASE AGGREGATE DENSE 3/4-INCH
BAD 6	6" BASE AGGREGATE DENSE 1 1/4-INCH
SOD	SALVAGED TOPSOIL, SOD LAWN, & FERTILIZER TYPE B
SEED	SALVAGED TOPSOIL, SEED, & FERTILIZER TYPE B
CG 36	CURB & GUTTER 6-INCH SLOPED 36-INCH TYPE D
#	STATION & OFFSET POINT NUMBER
CG 30	CURB & GUTTER 30-INCH TYPE D
CMSN	CONCRETE MEDIAN SLOPED NOSE, TYPE 1
DWY 6	CONCRETE DRIVEWAY 6-INCH CONCRETE
SW 5	SIDEWALK 5-INCH
MGS	MGS GUARDRAIL 3
EAT	MGS GUARDRAIL TERMINAL EAT
FLUME	ASPHALTIC FLUME
DRAIN	CONCRETE SURFACE DRAIN
CR X	CURB RAMP (TYPE AS NOTED)
XXXXX	SAWING CONCRETE
//////	SAWING ASPHALT
	REVERSE SLOPE GUTTER
- - - -	SLOPE INTERCEPT

PROJECT NO: RD16-003 | HWY: CTH S | COUNTY: KENOSHA | PAVING DETAILS | SHEET 103 | E

FILE NAME : T:\1165811\CIVIL3D\1165811\SHEETSPLAN\021201-PD.DWG
LAYOUT NAME - 10
PLOT DATE : 5/11/2020 12:50 PM PLOT BY : GUILLAMA, TINA PLOT NAME : PLOT SCALE : 1 IN:40 FT
WISDOT/CADDS SHEET 42

2

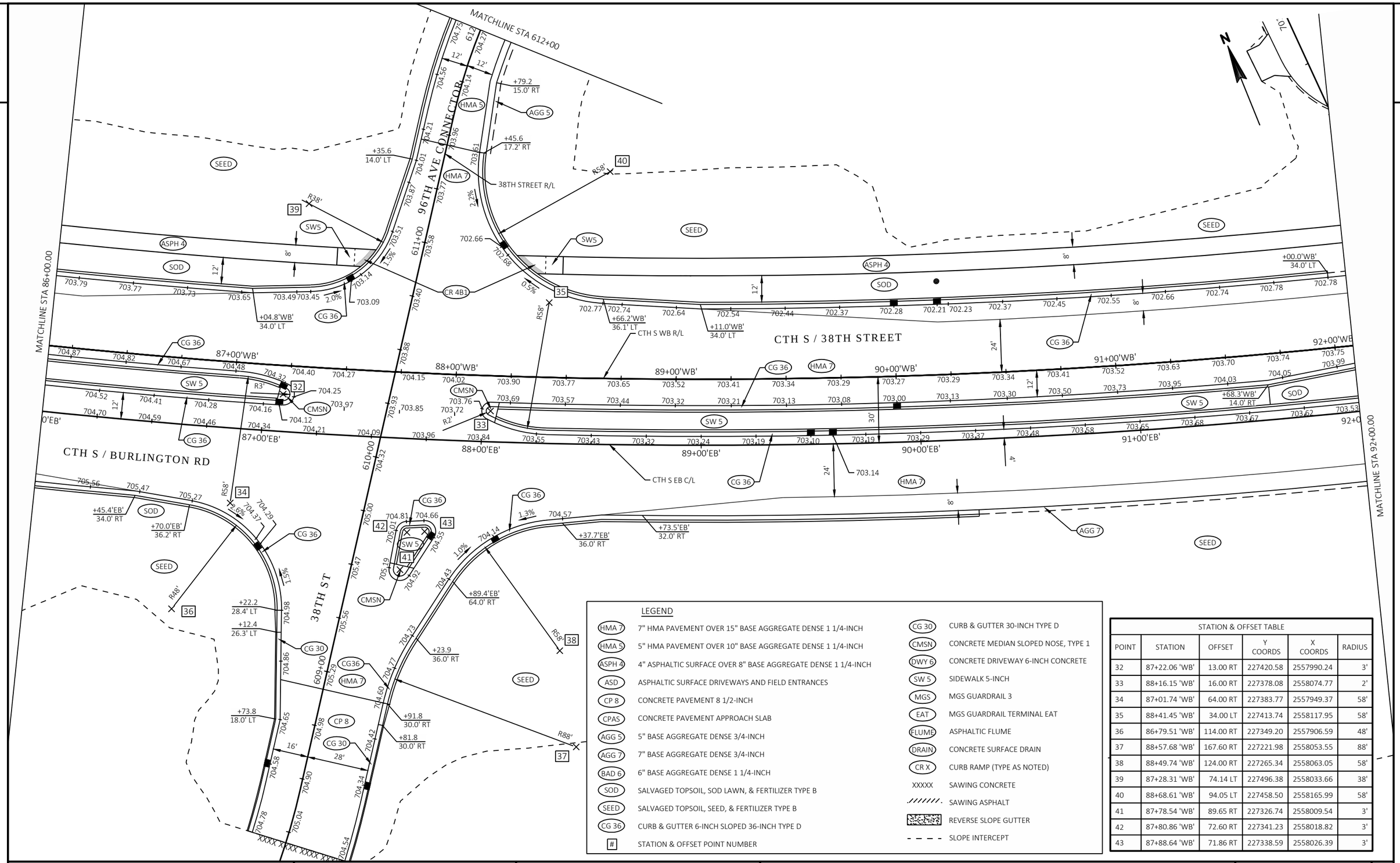

LEGEND

HMA 7	7" HMA PAVEMENT OVER 15" BASE AGGREGATE DENSE 1 1/4-INCH
HMA 5	5" HMA PAVEMENT OVER 10" BASE AGGREGATE DENSE 1 1/4-INCH
ASPH 4	4" ASPHALTIC SURFACE OVER 8" BASE AGGREGATE DENSE 1 1/4-INCH
ASD	ASPHALTIC SURFACE DRIVEWAYS AND FIELD ENTRANCES
CP 8	CONCRETE PAVEMENT 8 1/2-INCH
CPAS	CONCRETE PAVEMENT APPROACH SLAB
AGG 5	5" BASE AGGREGATE DENSE 3/4-INCH
AGG 7	7" BASE AGGREGATE DENSE 3/4-INCH
BAD 6	6" BASE AGGREGATE DENSE 1 1/4-INCH
SOD	SALVAGED TOPSOIL, SOD LAWN, & FERTILIZER TYPE B
SEED	SALVAGED TOPSOIL, SEED, & FERTILIZER TYPE B
CG 36	CURB & GUTTER 6-INCH SLOPED 36-INCH TYPE D
#	STATION & OFFSET POINT NUMBER
CG 30	CURB & GUTTER 30-INCH TYPE D
CMSN	CONCRETE MEDIAN SLOPED NOSE, TYPE 1
DWY 6	CONCRETE DRIVEWAY 6-INCH CONCRETE
SW 5	SIDEWALK 5-INCH
MGS	MGS GUARDRAIL 3
EAT	MGS GUARDRAIL TERMINAL EAT
FLUME	ASPHALTIC FLUME
DRAIN	CONCRETE SURFACE DRAIN
CR X	CURB RAMP (TYPE AS NOTED)
XXXXX	SAWING CONCRETE
	SAWING ASPHALT
	REVERSE SLOPE GUTTER
	SLOPE INTERCEPT

STATION & OFFSET TABLE

POINT	STATION	OFFSET	Y COORDS	X COORDS	RADIUS
32	87+22.06 'WB'	13.00 RT	227420.58	2557990.24	3'
33	88+16.15 'WB'	16.00 RT	227378.08	2558074.77	2'
34	87+01.74 'WB'	64.00 RT	227383.77	2557949.37	58'
35	88+41.45 'WB'	34.00 LT	227413.74	2558117.95	58'
36	86+79.51 'WB'	114.00 RT	227349.20	2557906.59	48'
37	88+57.68 'WB'	167.60 RT	227221.98	2558053.55	88'
38	88+49.74 'WB'	124.00 RT	227265.34	2558063.05	58'
39	87+28.31 'WB'	74.14 LT	227496.38	2558033.66	38'
40	88+68.61 'WB'	94.05 LT	227458.50	2558165.99	58'
41	87+78.54 'WB'	89.65 RT	227326.74	2558009.54	3'
42	87+80.86 'WB'	72.60 RT	227341.23	2558018.82	3'
43	87+88.64 'WB'	71.86 RT	227338.59	2558026.39	3'

PROJECT NO: RD16-003	HWY: CTH S	COUNTY: KENOSHA	PAVING DETAILS	SHEET 104	E

2

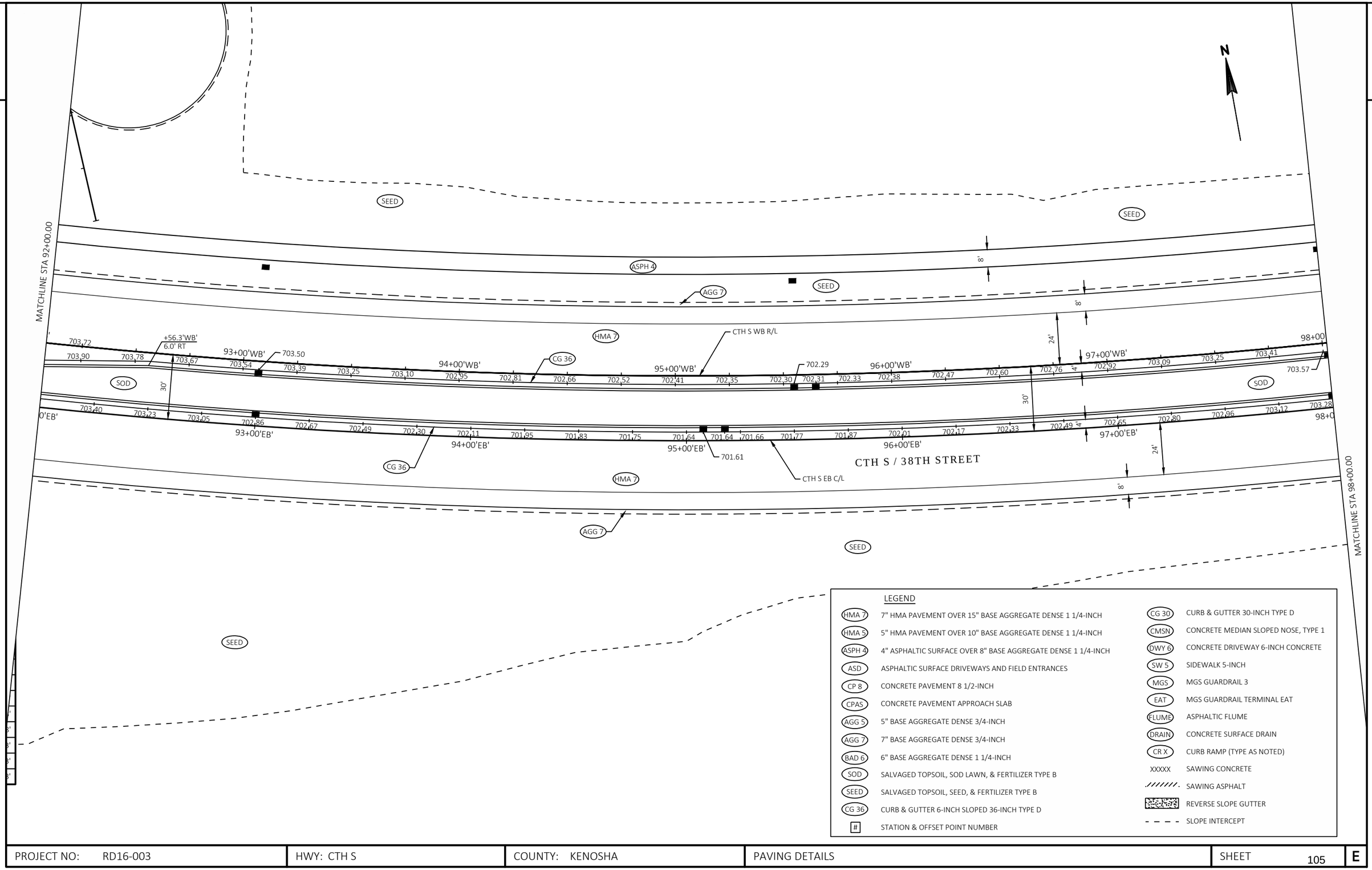

LEGEND

HMA 7	7" HMA PAVEMENT OVER 15" BASE AGGREGATE DENSE 1 1/4-INCH	CG 30	CURB & GUTTER 30-INCH TYPE D
HMA 5	5" HMA PAVEMENT OVER 10" BASE AGGREGATE DENSE 1 1/4-INCH	CMSN	CONCRETE MEDIAN SLOPED NOSE, TYPE 1
ASPH 4	4" ASPHALTIC SURFACE OVER 8" BASE AGGREGATE DENSE 1 1/4-INCH	DWY 6	CONCRETE DRIVEWAY 6-INCH CONCRETE
ASD	ASPHALTIC SURFACE DRIVEWAYS AND FIELD ENTRANCES	SW 5	SIDEWALK 5-INCH
CP 8	CONCRETE PAVEMENT 8 1/2-INCH	MGS	MGS GUARDRAIL 3
CPAS	CONCRETE PAVEMENT APPROACH SLAB	EAT	MGS GUARDRAIL TERMINAL EAT
AGG 5	5" BASE AGGREGATE DENSE 3/4-INCH	FLUME	ASPHALTIC FLUME
AGG 7	7" BASE AGGREGATE DENSE 3/4-INCH	DRAIN	CONCRETE SURFACE DRAIN
BAD 6	6" BASE AGGREGATE DENSE 1 1/4-INCH	CR X	CURB RAMP (TYPE AS NOTED)
SOD	SALVAGED TOPSOIL, SOD LAWN, & FERTILIZER TYPE B	XXXXX	SAWING CONCRETE
SEED	SALVAGED TOPSOIL, SEED, & FERTILIZER TYPE B		SAWING ASPHALT
CG 36	CURB & GUTTER 6-INCH SLOPED 36-INCH TYPE D		REVERSE SLOPE GUTTER
#	STATION & OFFSET POINT NUMBER		SLOPE INTERCEPT

PROJECT NO: RD16-003	HWY: CTH S	COUNTY: KENOSHA	PAVING DETAILS	SHEET 105	E

FILE NAME : T:\1165811\CIVIL3D\1165811\SHEETSPLAN\021201-PD.DWG
LAYOUT NAME - 12

PLOT DATE : 5/11/2020 12:50 PM PLOT BY : GUILLAMA, TINA PLOT NAME : PLOT SCALE : 1 IN:40 FT

2

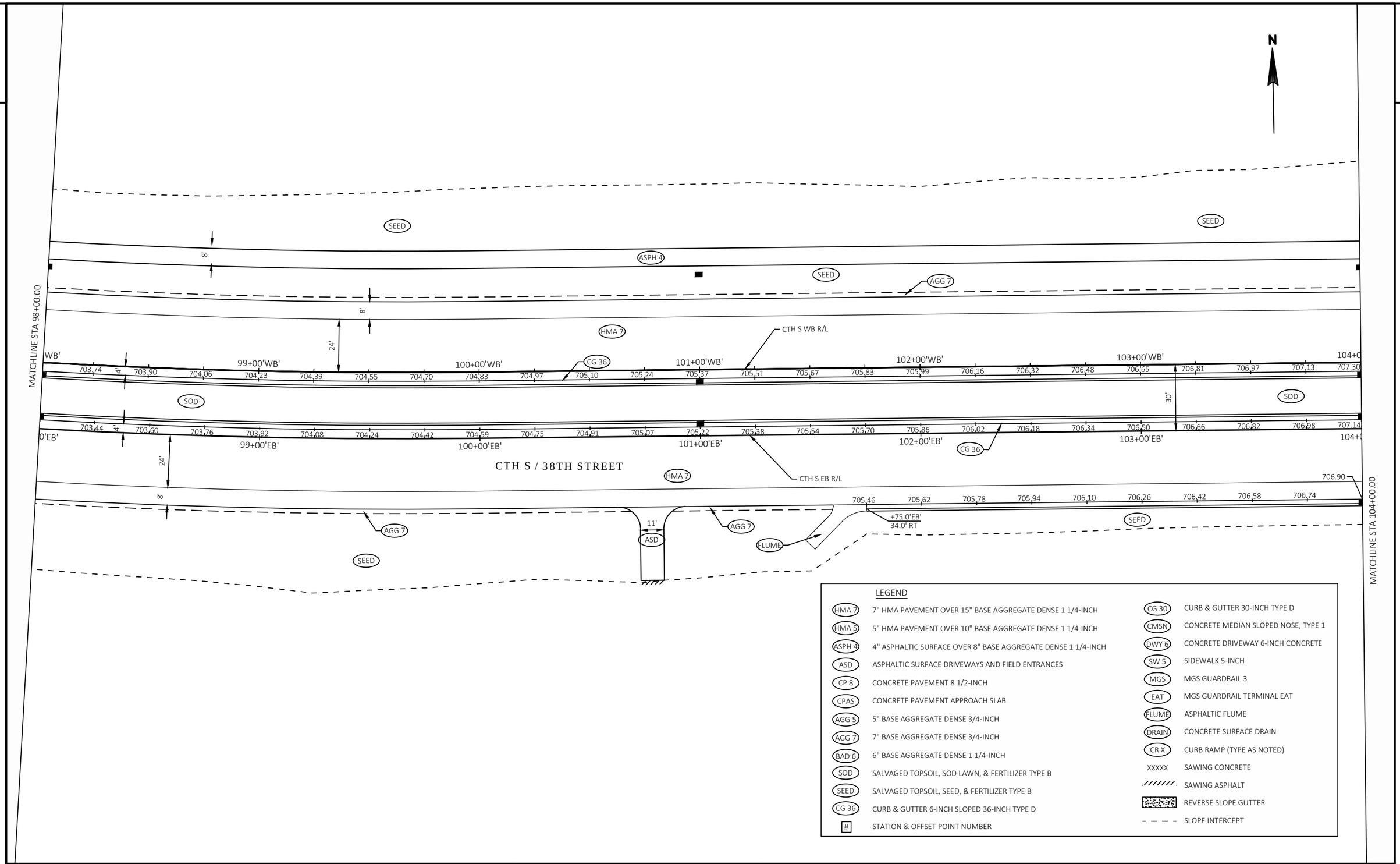

LEGEND

HMA 7	7" HMA PAVEMENT OVER 15" BASE AGGREGATE DENSE 1 1/4-INCH	CG 30	CURB & GUTTER 30-INCH TYPE D
HMA 5	5" HMA PAVEMENT OVER 10" BASE AGGREGATE DENSE 1 1/4-INCH	CMSN	CONCRETE MEDIAN SLOPED NOSE, TYPE 1
ASPH 4	4" ASPHALTIC SURFACE OVER 8" BASE AGGREGATE DENSE 1 1/4-INCH	DWY 6	CONCRETE DRIVEWAY 6-INCH CONCRETE
ASD	ASPHALTIC SURFACE DRIVEWAYS AND FIELD ENTRANCES	SW 5	SIDEWALK 5-INCH
CP 8	CONCRETE PAVEMENT 8 1/2-INCH	MGS	MGS GUARDRAIL 3
CPAS	CONCRETE PAVEMENT APPROACH SLAB	EAT	MGS GUARDRAIL TERMINAL EAT
AGG 5	5" BASE AGGREGATE DENSE 3/4-INCH	FLUME	ASPHALTIC FLUME
AGG 7	7" BASE AGGREGATE DENSE 3/4-INCH	DRAIN	CONCRETE SURFACE DRAIN
BAD 6	6" BASE AGGREGATE DENSE 1 1/4-INCH	CR X	CURB RAMP (TYPE AS NOTED)
SOD	SALVAGED TOPSOIL, SOD LAWN, & FERTILIZER TYPE B	XXXXX	SAWING CONCRETE
SEED	SALVAGED TOPSOIL, SEED, & FERTILIZER TYPE B		SAWING ASPHALT
CG 36	CURB & GUTTER 6-INCH SLOPED 36-INCH TYPE D		REVERSE SLOPE GUTTER
#	STATION & OFFSET POINT NUMBER		SLOPE INTERCEPT

PROJECT NO: RD16-003	HWY: CTH S	COUNTY: KENOSHA	PAVING DETAILS	SHEET 106	E

2

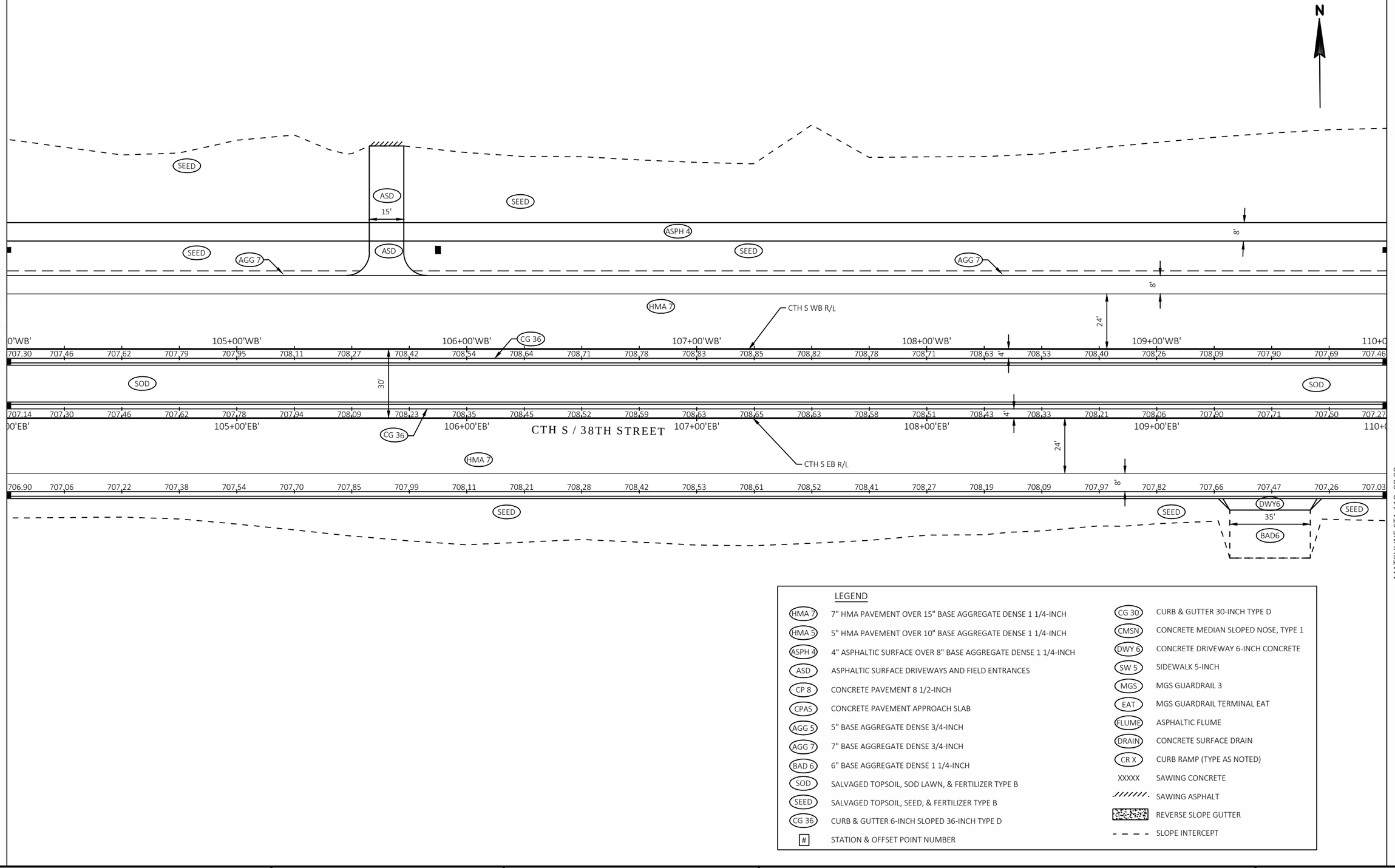

LEGEND

HMA 7	7" HMA PAVEMENT OVER 15" BASE AGGREGATE DENSE 1 1/4-INCH	CG 30	CURB & GUTTER 30-INCH TYPE D
HMA 5	5" HMA PAVEMENT OVER 10" BASE AGGREGATE DENSE 1 1/4-INCH	CMSN	CONCRETE MEDIAN SLOPED NOSE, TYPE 1
ASPH 4	4" ASPHALTIC SURFACE OVER 8" BASE AGGREGATE DENSE 1 1/4-INCH	DWY 6	CONCRETE DRIVEWAY 6-INCH CONCRETE
ASD	ASPHALTIC SURFACE DRIVEWAYS AND FIELD ENTRANCES	SW 5	SIDEWALK 5-INCH
CP 8	CONCRETE PAVEMENT 8 1/2-INCH	MGS	MGS GUARDRAIL 3
CPAS	CONCRETE PAVEMENT APPROACH SLAB	EAT	MGS GUARDRAIL TERMINAL EAT
AGG 5	5" BASE AGGREGATE DENSE 3/4-INCH	FLUME	ASPHALTIC FLUME
AGG 7	7" BASE AGGREGATE DENSE 3/4-INCH	DRAIN	CONCRETE SURFACE DRAIN
BAD 6	6" BASE AGGREGATE DENSE 1 1/4-INCH	CR X	CURB RAMP (TYPE AS NOTED)
SOD	SALVAGED TOPSOIL, SOD LAWN, & FERTILIZER TYPE B	XXXXX	SAWING CONCRETE
SEED	SALVAGED TOPSOIL, SEED, & FERTILIZER TYPE B		SAWING ASPHALT
CG 36	CURB & GUTTER 6-INCH SLOPED 36-INCH TYPE D		REVERSE SLOPE GUTTER
#	STATION & OFFSET POINT NUMBER		SLOPE INTERCEPT

PROJECT NO: RD16-003	HWY: CTH S	COUNTY: KENOSHA	PAVING DETAILS	SHEET 107	E

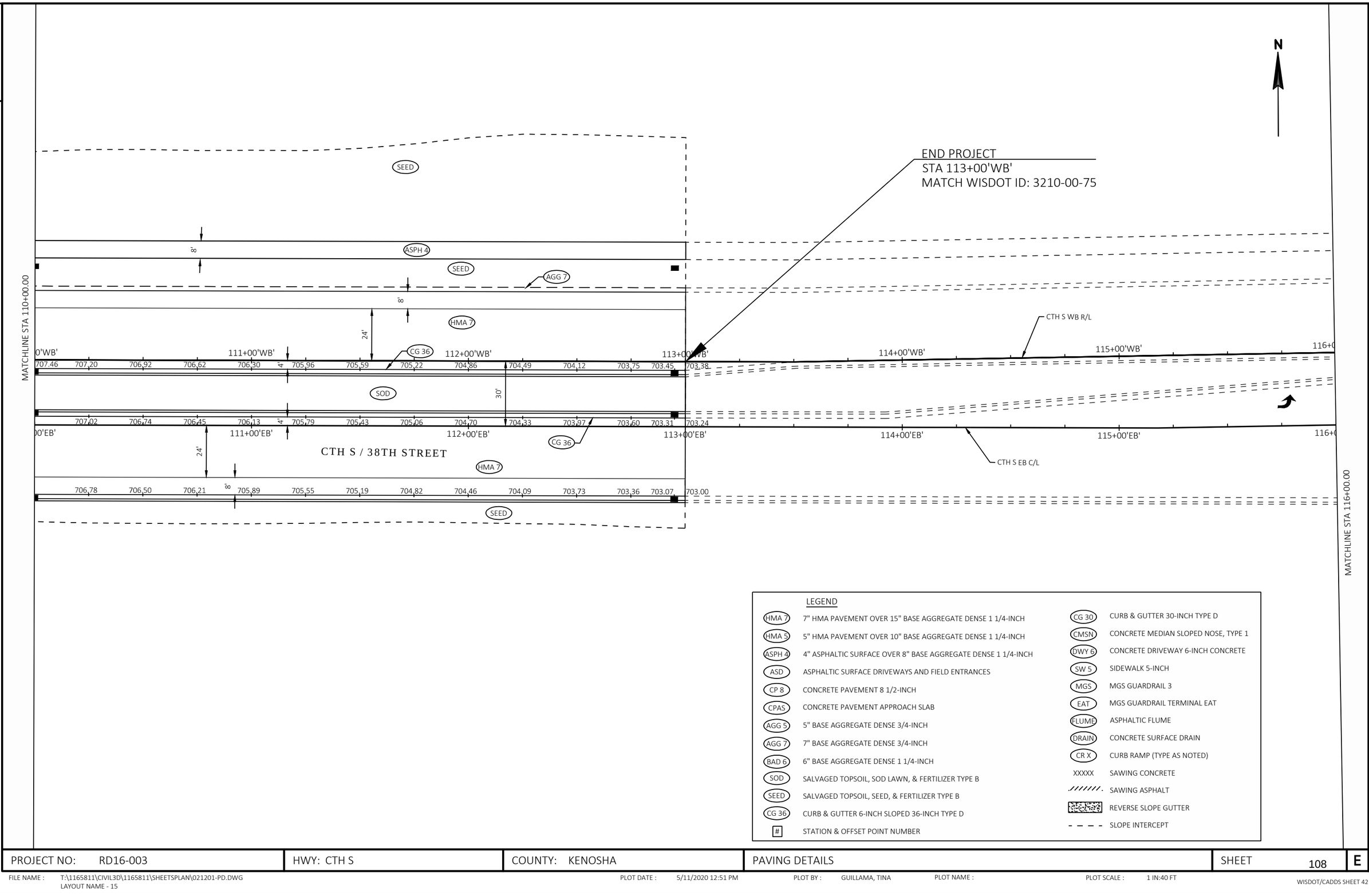

LEGEND

HMA 7	7" HMA PAVEMENT OVER 15" BASE AGGREGATE DENSE 1 1/4-INCH	CG 30	CURB & GUTTER 30-INCH TYPE D
HMA 5	5" HMA PAVEMENT OVER 10" BASE AGGREGATE DENSE 1 1/4-INCH	CMSN	CONCRETE MEDIAN SLOPED NOSE, TYPE 1
ASPH 4	4" ASPHALTIC SURFACE OVER 8" BASE AGGREGATE DENSE 1 1/4-INCH	DWY 6	CONCRETE DRIVEWAY 6-INCH CONCRETE
ASD	ASPHALTIC SURFACE DRIVEWAYS AND FIELD ENTRANCES	SW 5	SIDEWALK 5-INCH
CP 8	CONCRETE PAVEMENT 8 1/2-INCH	MGS	MGS GUARDRAIL 3
CPAS	CONCRETE PAVEMENT APPROACH SLAB	EAT	MGS GUARDRAIL TERMINAL EAT
AGG 5	5" BASE AGGREGATE DENSE 3/4-INCH	FLUME	ASPHALTIC FLUME
AGG 7	7" BASE AGGREGATE DENSE 3/4-INCH	DRAIN	CONCRETE SURFACE DRAIN
BAD 6	6" BASE AGGREGATE DENSE 1 1/4-INCH	CR X	CURB RAMP (TYPE AS NOTED)
SOD	SALVAGED TOPSOIL, SOD LAWN, & FERTILIZER TYPE B	XXXXX	SAWING CONCRETE
SEED	SALVAGED TOPSOIL, SEED, & FERTILIZER TYPE B		SAWING ASPHALT
CG 36	CURB & GUTTER 6-INCH SLOPED 36-INCH TYPE D		REVERSE SLOPE GUTTER
#	STATION & OFFSET POINT NUMBER		SLOPE INTERCEPT

PROJECT NO: RD16-003	HWY: CTH S	COUNTY: KENOSHA	PAVING DETAILS	SHEET 108	E

2

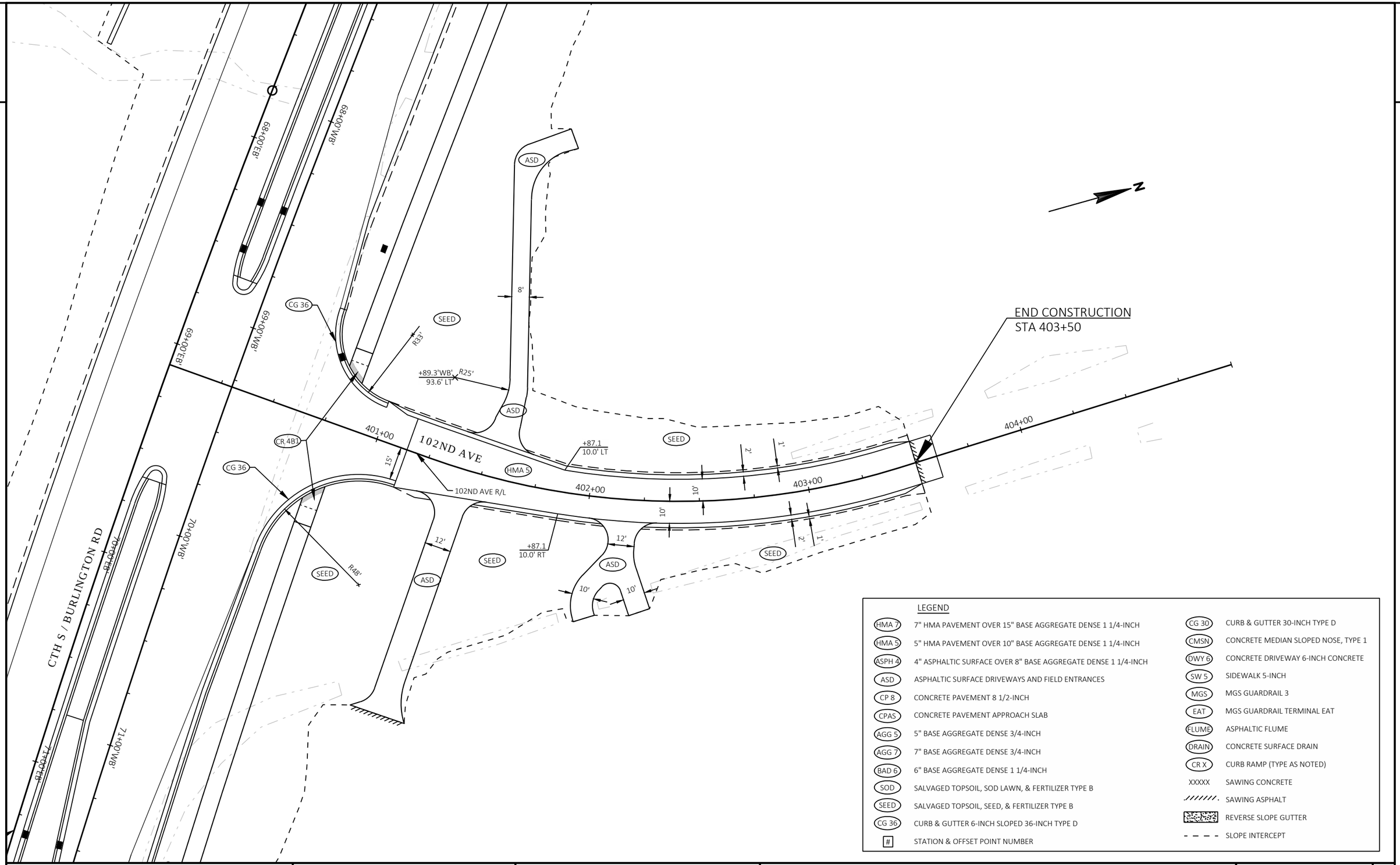

LEGEND

HMA 7	7" HMA PAVEMENT OVER 15" BASE AGGREGATE DENSE 1 1/4-INCH
HMA 5	5" HMA PAVEMENT OVER 10" BASE AGGREGATE DENSE 1 1/4-INCH
ASPH 4	4" ASPHALTIC SURFACE OVER 8" BASE AGGREGATE DENSE 1 1/4-INCH
ASD	ASPHALTIC SURFACE DRIVEWAYS AND FIELD ENTRANCES
CP 8	CONCRETE PAVEMENT 8 1/2-INCH
CPAS	CONCRETE PAVEMENT APPROACH SLAB
AGG 5	5" BASE AGGREGATE DENSE 3/4-INCH
AGG 7	7" BASE AGGREGATE DENSE 3/4-INCH
BAD 6	6" BASE AGGREGATE DENSE 1 1/4-INCH
SOD	SALVAGED TOPSOIL, SOD LAWN, & FERTILIZER TYPE B
SEED	SALVAGED TOPSOIL, SEED, & FERTILIZER TYPE B
CG 36	CURB & GUTTER 6-INCH SLOPED 36-INCH TYPE D
#	STATION & OFFSET POINT NUMBER
CG 30	CURB & GUTTER 30-INCH TYPE D
CMSN	CONCRETE MEDIAN SLOPED NOSE, TYPE 1
DWY 6	CONCRETE DRIVEWAY 6-INCH CONCRETE
SW 5	SIDEWALK 5-INCH
MGS	MGS GUARDRAIL 3
EAT	MGS GUARDRAIL TERMINAL EAT
FLUME	ASPHALTIC FLUME
DRAIN	CONCRETE SURFACE DRAIN
CR X	CURB RAMP (TYPE AS NOTED)
XXXXX	SAWING CONCRETE
	SAWING ASPHALT
	REVERSE SLOPE GUTTER
	SLOPE INTERCEPT

PROJECT NO: RD16-003	HWY: CTH S	COUNTY: KENOSHA	PAVING DETAILS - 102ND AVE	SHEET 109	E

FILE NAME : T:\1165811\CIVIL3D\1165811\SHEETSPLAN\021202-PD.DWG
LAYOUT NAME - 102ND AVE

PLOT DATE : 5/11/2020 12:55 PM PLOT BY : GUILLAMA, TINA PLOT NAME : PLOT SCALE : 1 IN:40 FT

2

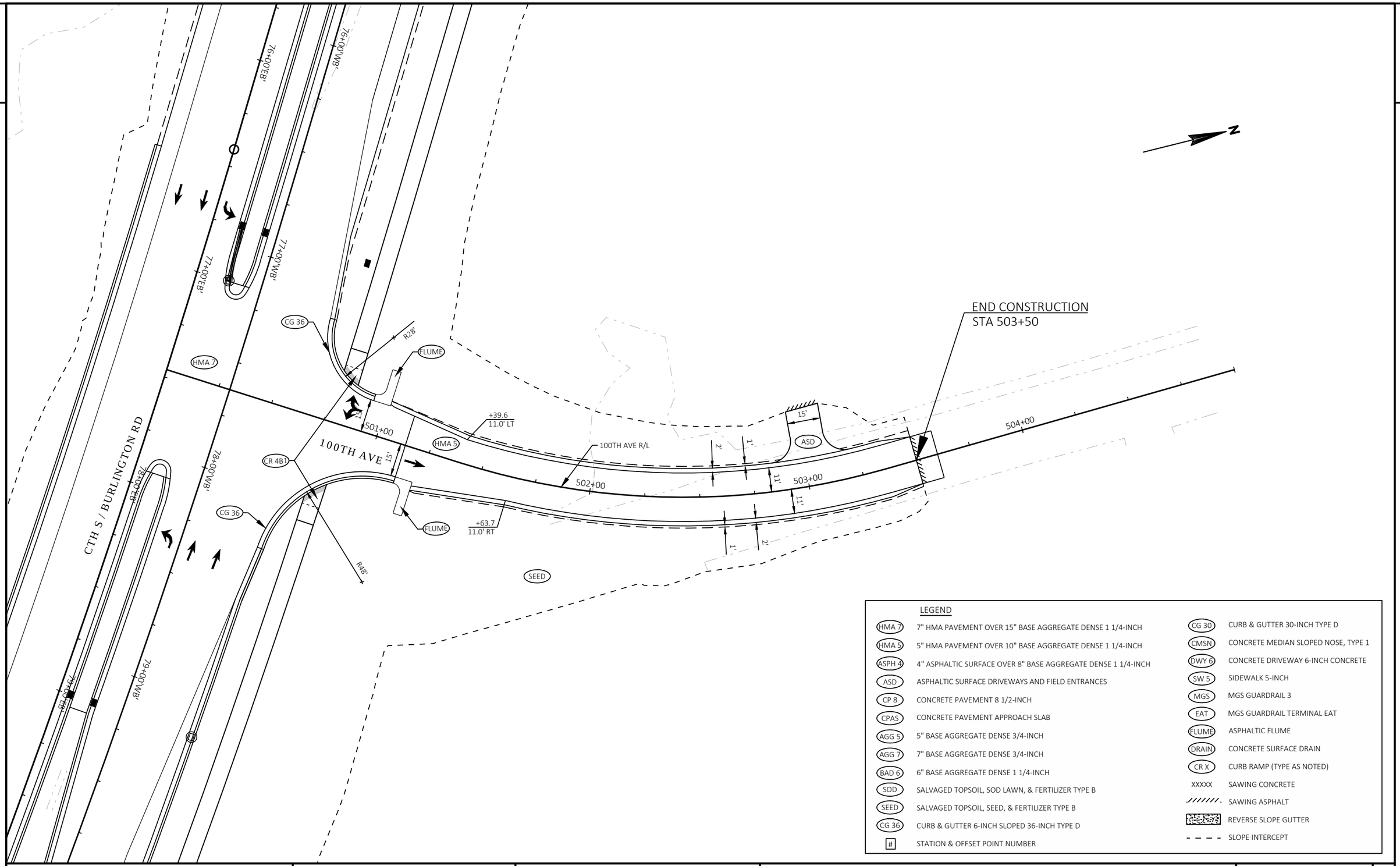

PROJECT NO: RD16-003	HWY: CTH S	COUNTY: KENOSHA	PAVING DETAILS - 100TH AVE	SHEET 110	E

FILE NAME : T:\1165811\CIVIL3D\1165811\SHEETSPLAN\021202-PD.DWG
LAYOUT NAME - 100TH AVE

PLOT DATE : 5/11/2020 12:56 PM PLOT BY : GUILLAMA, TINA PLOT NAME : PLOT SCALE : 1 IN:40 FT

2

STATION & OFFSET TABLE					
POINT	STATION	OFFSET	Y COORDS	X COORDS	RADIUS
44	612+15.50	28.45 LT	227572.15	2558127.47	30'
45	612+45.38	96.23 LT	227648.22	2558113.97	20'
46	615+14.59	37.00 LT	227655.40	2558428.69	22'
47	615+16.81	37.00 RT	227581.44	2558432.19	22'

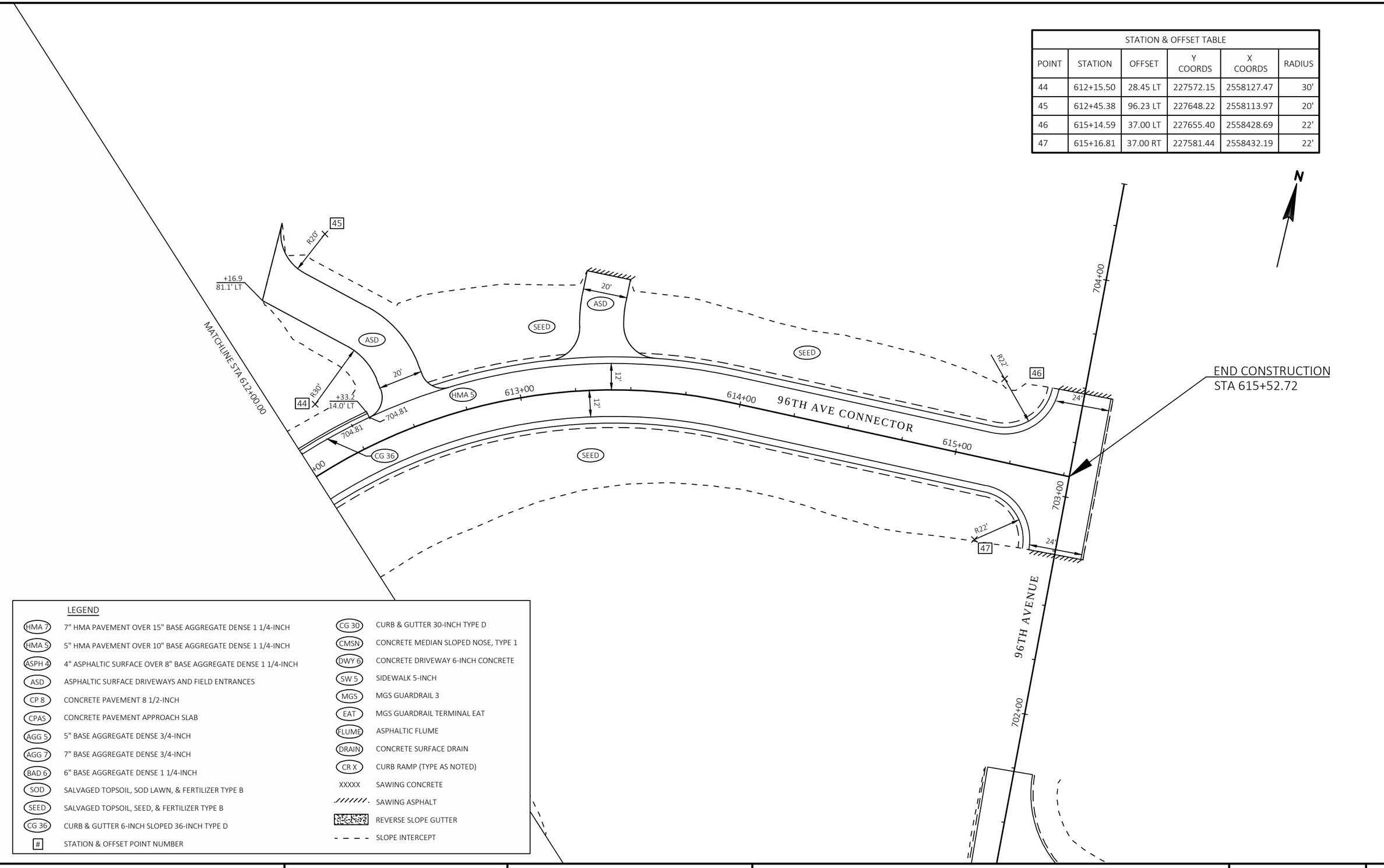

LEGEND

HMA 7	7" HMA PAVEMENT OVER 15" BASE AGGREGATE DENSE 1 1/4-INCH	CG 30	CURB & GUTTER 30-INCH TYPE D
HMA 5	5" HMA PAVEMENT OVER 10" BASE AGGREGATE DENSE 1 1/4-INCH	CMSN	CONCRETE MEDIAN SLOPED NOSE, TYPE 1
ASPH 4	4" ASPHALTIC SURFACE OVER 8" BASE AGGREGATE DENSE 1 1/4-INCH	DWY 6	CONCRETE DRIVEWAY 6-INCH CONCRETE
ASD	ASPHALTIC SURFACE DRIVEWAYS AND FIELD ENTRANCES	SW 5	SIDEWALK 5-INCH
CP 8	CONCRETE PAVEMENT 8 1/2-INCH	MGS	MGS GUARDRAIL 3
CPAS	CONCRETE PAVEMENT APPROACH SLAB	EAT	MGS GUARDRAIL TERMINAL EAT
AGG 5	5" BASE AGGREGATE DENSE 3/4-INCH	FLUME	ASPHALTIC FLUME
AGG 7	7" BASE AGGREGATE DENSE 3/4-INCH	DRAIN	CONCRETE SURFACE DRAIN
BAD 6	6" BASE AGGREGATE DENSE 1 1/4-INCH	CR X	CURB RAMP (TYPE AS NOTED)
SOD	SALVAGED TOPSOIL, SOD LAWN, & FERTILIZER TYPE B	XXXXX	SAWING CONCRETE
SEED	SALVAGED TOPSOIL, SEED, & FERTILIZER TYPE B		SAWING ASPHALT
CG 36	CURB & GUTTER 6-INCH SLOPED 36-INCH TYPE D		REVERSE SLOPE GUTTER
#	STATION & OFFSET POINT NUMBER		SLOPE INTERCEPT

PROJECT NO: RD16-003	HWY: CTH S	COUNTY: KENOSHA	PAVING DETAILS - NEW 96TH AVE CONNECTION	SHEET 111	E

LEGEND

HMA 7	7" HMA PAVEMENT OVER 15" BASE AGGREGATE DENSE 1 1/4-INCH	CG 30	CURB & GUTTER 30-INCH TYPE D
HMA 5	5" HMA PAVEMENT OVER 10" BASE AGGREGATE DENSE 1 1/4-INCH	CMSN	CONCRETE MEDIAN SLOPED NOSE, TYPE 1
ASPH 4	4" ASPHALTIC SURFACE OVER 8" BASE AGGREGATE DENSE 1 1/4-INCH	DWY 6	CONCRETE DRIVEWAY 6-INCH
ASD	ASPHALTIC SURFACE DRIVEWAYS AND FIELD ENTRANCES	SW 5	CONCRETE SIDEWALK 5-INCH
CP 8	CONCRETE PAVEMENT 8 1/2-INCH	MGS	MGS GUARDRAIL
CPAS	CONCRETE PAVEMENT APPROACH SLAB	FLUME	ASPHALTIC FLUME
SOD	SALVAGED TOPSOIL, SOD LAWN, & FERTILIZER TYPE B	DRAIN	CONCRETE SURFACE DRAIN
SEED	SALVAGED TOPSOIL, SEED, & FERTILIZER TYPE B	CR X	CURB RAMP (TYPE AS NOTED)
CG 36	CURB & GUTTER 6-INCH SLOPED 36-INCH TYPE D	X X X X X	SAWCUT

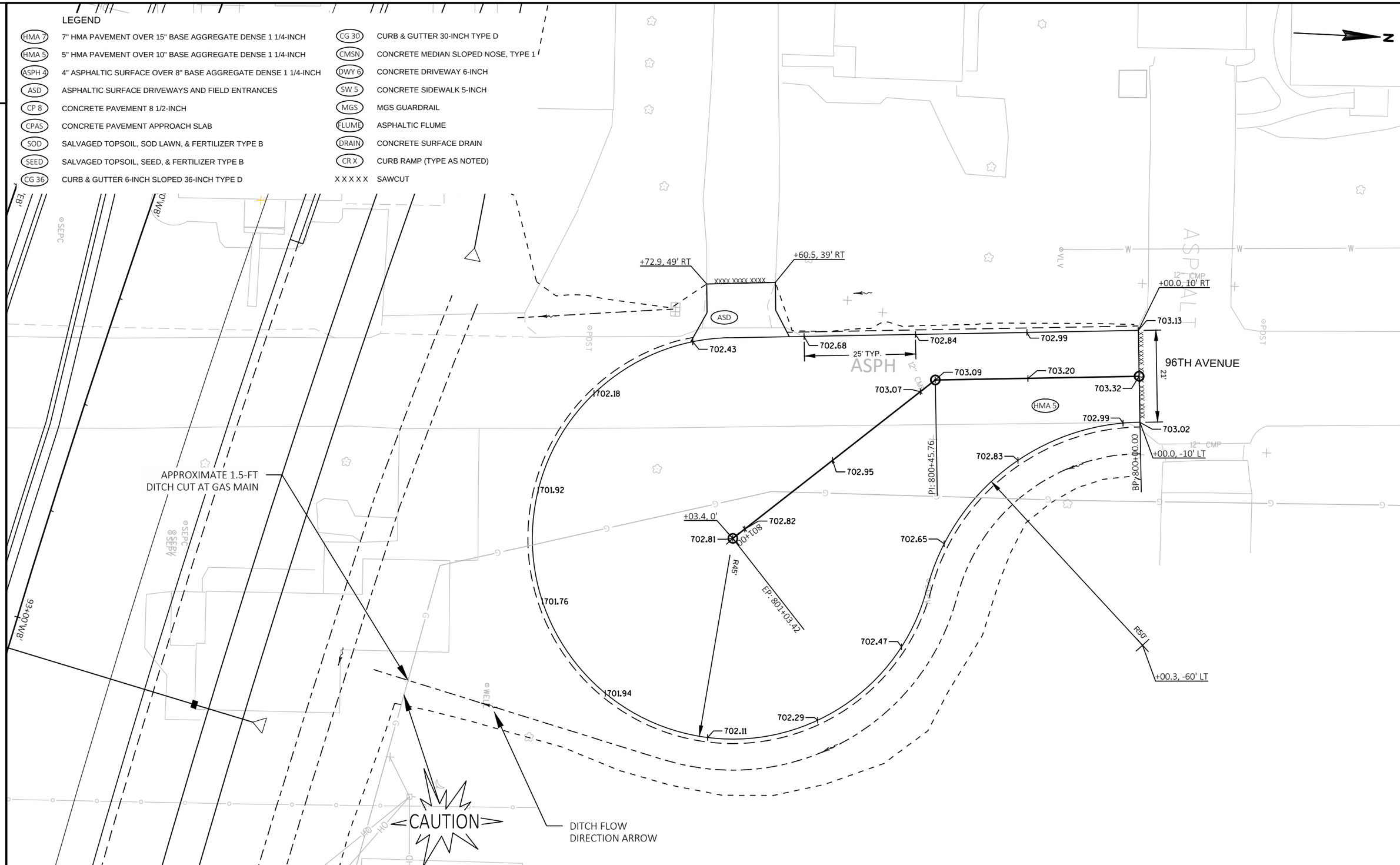

PROJECT NO: RD16-003	HWY: CTH S	COUNTY: KENOSHA	PAVING DETAILS - 96TH AVENUE CUL-DE-SAC	SHEET 112	E

NOTES:
1. PLACE INLET PROTECTION TYPE A DURING GRADING OPERATIONS. PLACE RESPECTIVE INLET PROTECTION WHEN COVER IS INSTALLED.

+30'WB' 75'LT
+00'WB' 74'LT
+50'WB' 78'LT
+65'WB' 77'LT
+21'WB' 59'LT

27+00'WB' 28+00'WB' 29+00'WB' 30+00'WB' 31+00'WB' 32+00'WB'

27+00'EB' 28+00'EB' 29+00'EB' 30+00'EB' 31+00'EB' 32+0

202+00 201+00

CTH S /BURLINGTON ROAD

AMAZON WEST DRIVEWAY

MATCHLINE STA 32+00.00

BEGIN PROJECT
STA. 27+25'WB'

WELL GUY A/C SS MH

LEGEND

- EROSION MAT CLASS I TYPE B
- EROSION MAT CLASS II TYPE C
- SILT FENCE
- SILT FENCE HEAVY DUTY
- RIP RAP MEDIUM
- WETLAND BOUNDARY
- SLOPE INTERCEPT
- INLET PROTECTION (TYPE 'X' AS NOTED)
- TEMPORARY DITCH CHECK
- CULVERT PIPE CHECK
- SILT FENCE DRAINAGE OUTLET, ROCK BAGS
- SURFACE WATER FLOW
- TURBIDITY BARRIER
- FILTER STRIP

PROJECT NO: RD16-003	HWY: CTH S	COUNTY: KENOSHA	EROSION CONTROL	SHEET 113	E

FILE NAME : T:\1165811\CIVIL3D\1165811\SHEETSPLAN\022001-EC.DWG
LAYOUT NAME - 1
PLOT DATE : 5/11/2020 1:02 PM PLOT BY : GUILLAMA, TINA PLOT NAME : PLOT SCALE : 1 IN:40 FT
WISDOT/CADDS SHEET 42

2

2

MATCHLINE STA 32+00.00

+38'WB' 97'LT

+50'WB' 95'LT

+50'WB' 96'LT

2' WIDE TOP OF BERM

+50'WB' 101'LT

+15'WB' 99'LT

+47'WB' 104'LT

+58'WB' 94'LT

+76'WB' 94'LT

N

GUY POLE

GUY POLE

29"X45" RCP

33+00'WB' 34+00'WB' 35+00'WB' 36+00'WB' 37+00'WB' 38+00'WB'

0'EB' 33+00'EB' 34+00'EB' 35+00'EB' 36+00'EB' 37+00'EB' 38+0

CTH S /BURLINGTON ROAD

MH SS

A C

B

MATCHLINE STA 38+00.00

LEGEND

	EROSION MAT CLASS I TYPE B
	EROSION MAT CLASS II TYPE C
	SILT FENCE
	SILT FENCE HEAVY DUTY
	RIP RAP MEDIUM
	WETLAND BOUNDARY
	SLOPE INTERCEPT
X	INLET PROTECTION (TYPE 'X' AS NOTED)
	TEMPORARY DITCH CHECK
	CULVERT PIPE CHECK
	SILT FENCE DRAINAGE OUTLET, ROCK BAGS
	SURFACE WATER FLOW
	TURBIDITY BARRIER
	FILTER STRIP

PROJECT NO: RD16-003	HWY: CTH S	COUNTY: KENOSHA	EROSION CONTROL	SHEET 114	E

FILE NAME : T:\1165811\CIVIL3D\1165811\SHEETSPLAN\022001-EC.DWG
LAYOUT NAME - 2

PLOT DATE : 5/11/2020 1:02 PM PLOT BY : GUILLAMA, TINA PLOT NAME : PLOT SCALE : 1 IN:40 FT

WISDOT/CADDS SHEET 42

2

2

MATCHLINE STA 38+00.00

MATCHLINE STA 44+00.00

+58'WB' 86'LT

+37'WB' 85'LT

+75'WB' 88'LT

+21'WB' 90'LT

39+00'WB'

40+00'WB'

41+00'WB'

42+00'WB'

43+00'WB'

44+00'WB'

39+00'EB'

40+00'EB'

41+00'EB'

42+00'EB'

43+00'EB'

CTH S /BURLINGTON ROAD

AMAZON EAST DRIVEWAY

301+00

8 GUY POLE

GUY

SS

MH

FILTER STRIP

BURIED CABLE

N

LEGEND

- EROSION MAT CLASS I TYPE B
- EROSION MAT CLASS II TYPE C
- SILT FENCE
- SILT FENCE HEAVY DUTY
- RIP RAP MEDIUM
- WETLAND BOUNDARY
- SLOPE INTERCEPT
- INLET PROTECTION (TYPE 'X' AS NOTED)
- TEMPORARY DITCH CHECK
- CULVERT PIPE CHECK
- SILT FENCE DRAINAGE OUTLET, ROCK BAGS
- SURFACE WATER FLOW
- TURBIDITY BARRIER
- FILTER STRIP

PROJECT NO: RD16-003	HWY: CTH S	COUNTY: KENOSHA	EROSION CONTROL	SHEET 115	E

FILE NAME : T:\1165811\CIVIL3D\1165811\SHEETSPLAN\022001-EC.DWG
LAYOUT NAME - 3

PLOT DATE : 5/11/2020 1:02 PM PLOT BY : GUILLAMA, TINA PLOT NAME : PLOT SCALE : 1 IN:40 FT

WISDOT/CADDS SHEET 42

2

MATCHLINE STA 44+00.00

45+00'WB' 46+00'WB' 47+00'WB' 48+00'WB' 49+00'WB' 50+00'WB'

45+00'EB' 46+00'EB' 47+00'EB' 48+00'EB' 49+00'EB'

FILTER STRIP

18" CMP

CTH S /BURLINGTON ROAD

8" CPP 18" CMP 15" CPP 18" CMP

+12'WB' 94'RT
+40'WB' 89'RT
+89'WB' 89'RT
+93'WB' 99'RT
+24'WB' 92'RT
+37'WB' 81'RT
+52'WB' 78'RT
+83'WB' 88'RT
+88'WB' 85'RT
+44'WB' 85'RT
+52'WB' 94'RT
+67'WB' 86'RT
+75'WB' 81'RT
+18'WB 88'RT
+75'WB' 88'RT
+93'WB' 117'RT

MATCHLINE STA 50+00.00

LEGEND

- EROSION MAT CLASS I TYPE B
- EROSION MAT CLASS II TYPE C
- SILT FENCE
- SILT FENCE HEAVY DUTY
- RIP RAP MEDIUM
- WETLAND BOUNDARY
- SLOPE INTERCEPT
- INLET PROTECTION (TYPE 'X' AS NOTED)
- TEMPORARY DITCH CHECK
- CULVERT PIPE CHECK
- SILT FENCE DRAINAGE OUTLET, ROCK BAGS
- SURFACE WATER FLOW
- TURBIDITY BARRIER
- FILTER STRIP

PROJECT NO: RD16-003	HWY: CTH S	COUNTY: KENOSHA	EROSION CONTROL	SHEET 116	E

FILE NAME : T:\1165811\CIVIL3D\1165811\SHEETSPLAN\022001-EC.DWG
LAYOUT NAME - 4
PLOT DATE : 5/11/2020 1:03 PM
PLOT BY : GUILLAMA, TINA
PLOT NAME :
PLOT SCALE : 1 IN:40 FT
WISDOT/CADDS SHEET 42

2

2

FILTER STRIP

MATCHLINE STA 50+00.00

51+00'WB'

52+00'WB'

53+00'WB'

54+00'WB'

55+00'WB'

56+00'WB'

51+00'EB'

52+00'EB'

53+00'EB'

54+00'EB'

55+00'EB'

CTH S /BURLINGTON ROAD

+13'WB'
79'RT

+12'WB'
96'RT

+13'WB'
109'RT

+67'WB'
80'RT

+92'WB'
79'RT

MATCHLINE STA 56+00.00

LEGEND

- EROSION MAT CLASS I TYPE B
- EROSION MAT CLASS II TYPE C
- SILT FENCE
- SILT FENCE HEAVY DUTY
- RIP RAP MEDIUM
- WETLAND BOUNDARY
- SLOPE INTERCEPT
- INLET PROTECTION (TYPE 'X' AS NOTED)
- TEMPORARY DITCH CHECK
- CULVERT PIPE CHECK
- SILT FENCE DRAINAGE OUTLET, ROCK BAGS
- SURFACE WATER FLOW
- TURBIDITY BARRIER
- FILTER STRIP

PROJECT NO: RD16-003	HWY: CTH S	COUNTY: KENOSHA	EROSION CONTROL	SHEET 117	E

FILE NAME : T:\1165811\CIVIL3D\1165811\SHEETSPLAN\022001-EC.DWG
LAYOUT NAME - 5
PLOT DATE : 5/11/2020 1:03 PM
PLOT BY : GUILLAMA, TINA
PLOT NAME :
PLOT SCALE : 1 IN:40 FT
WISDOT/CADDS SHEET 42

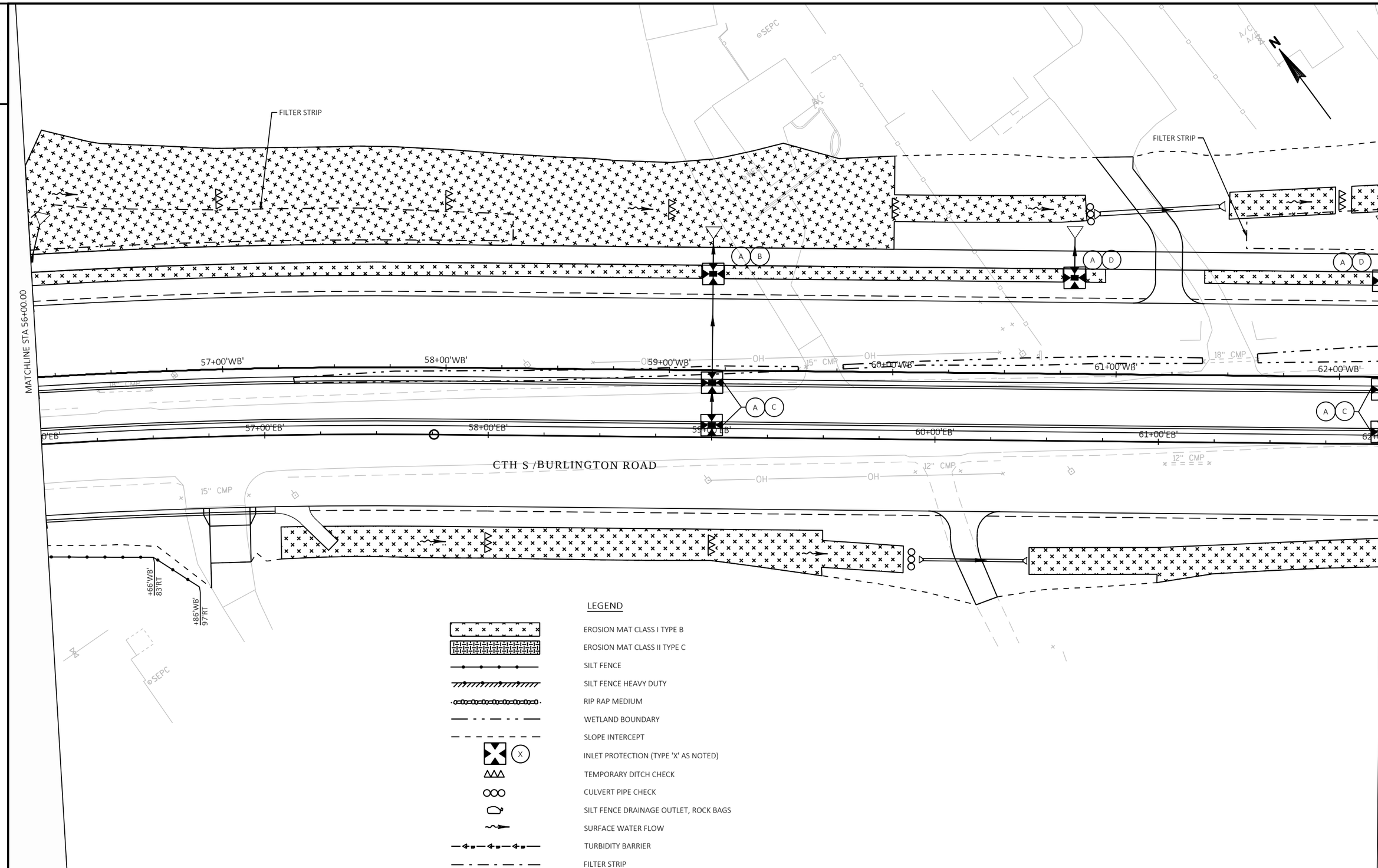

2

PROJECT NO: RD16-003	HWY: CTH S	COUNTY: KENOSHA	EROSION CONTROL	SHEET 118	E

FILE NAME : T:\1165811\CIVIL3D\1165811\SHEETSPLAN\022001-EC.DWG
LAYOUT NAME - 6
PLOT DATE : 5/11/2020 1:03 PM
PLOT BY : GUILLAMA, TINA
PLOT NAME :
PLOT SCALE : 1 IN:40 FT
WISDOT/CADDS SHEET 42

2

2

MATCHLINE STA 62+00.00

MATCHLINE STA 68+00.00

FILTER STRIP

SEPO

WELL

A/G

OH

18" CMP

15" CMP

63+00'WB'

64+00'WB'

65+00'WB'

66+00'WB'

67+00'WB'

68+00'WB'

63+00'EB'

64+00'EB'

65+00'EB'

66+00'EB'

67+00'EB'

A D

A C

CTH S /BURLINGTON ROAD

+62'WB' 107'RT

2' WIDE TOP OF BERM

+69'WB' 110'RT

+84'WB' 107'RT

+04'WB' 113'RT

LEGEND

EROSION MAT CLASS I TYPE B

EROSION MAT CLASS II TYPE C

SILT FENCE

SILT FENCE HEAVY DUTY

RIP RAP MEDIUM

WETLAND BOUNDARY

SLOPE INTERCEPT

INLET PROTECTION (TYPE 'X' AS NOTED)

TEMPORARY DITCH CHECK

CULVERT PIPE CHECK

SILT FENCE DRAINAGE OUTLET, ROCK BAGS

SURFACE WATER FLOW

TURBIDITY BARRIER

FILTER STRIP

PROJECT NO: RD16-003	HWY: CTH S	COUNTY: KENOSHA	EROSION CONTROL	SHEET 119	E

FILE NAME : T:\1165811\CIVIL3D\1165811\SHEETSPLAN\022001-EC.DWG
LAYOUT NAME - 7

PLOT DATE : 5/11/2020 1:04 PM PLOT BY : GUILLAMA, TINA PLOT NAME : PLOT SCALE : 1 IN:40 FT

WISDOT/CADDS SHEET 42

2

2

102ND AVENUE

401+00

MATCHLINE STA 68+00.00

CTH S /BURLINGTON ROAD

69+00'WB'

70+00'WB'

71+00'WB'

72+00'WB'

73+00'WB'

74+00'WB'

69+00'EB'

70+00'EB'

71+00'EB'

72+00'EB'

73+00'EB'

CTH S /BURLINGTON ROAD

MATCHLINE STA 74+00.00

+32'WB'
91'RT

+36'WB'
85'RT

+97'WB'
90'RT

+17'WB'
86'RT

LEGEND

- EROSION MAT CLASS I TYPE B
- EROSION MAT CLASS II TYPE C
- SILT FENCE
- SILT FENCE HEAVY DUTY
- RIP RAP MEDIUM
- WETLAND BOUNDARY
- SLOPE INTERCEPT
- INLET PROTECTION (TYPE 'X' AS NOTED)
- TEMPORARY DITCH CHECK
- CULVERT PIPE CHECK
- SILT FENCE DRAINAGE OUTLET, ROCK BAGS
- SURFACE WATER FLOW
- TURBIDITY BARRIER
- FILTER STRIP

PROJECT NO: RD16-003	HWY: CTH S	COUNTY: KENOSHA	EROSION CONTROL	SHEET 120	E

FILE NAME : T:\1165811\CIVIL3D\1165811\SHEETSPLAN\022001-EC.DWG
LAYOUT NAME - 8

PLOT DATE : 5/11/2020 1:04 PM

PLOT BY : GUILLAMA, TINA

PLOT NAME :

PLOT SCALE : 1 IN:40 FT

WISDOT/CADDS SHEET 42

2

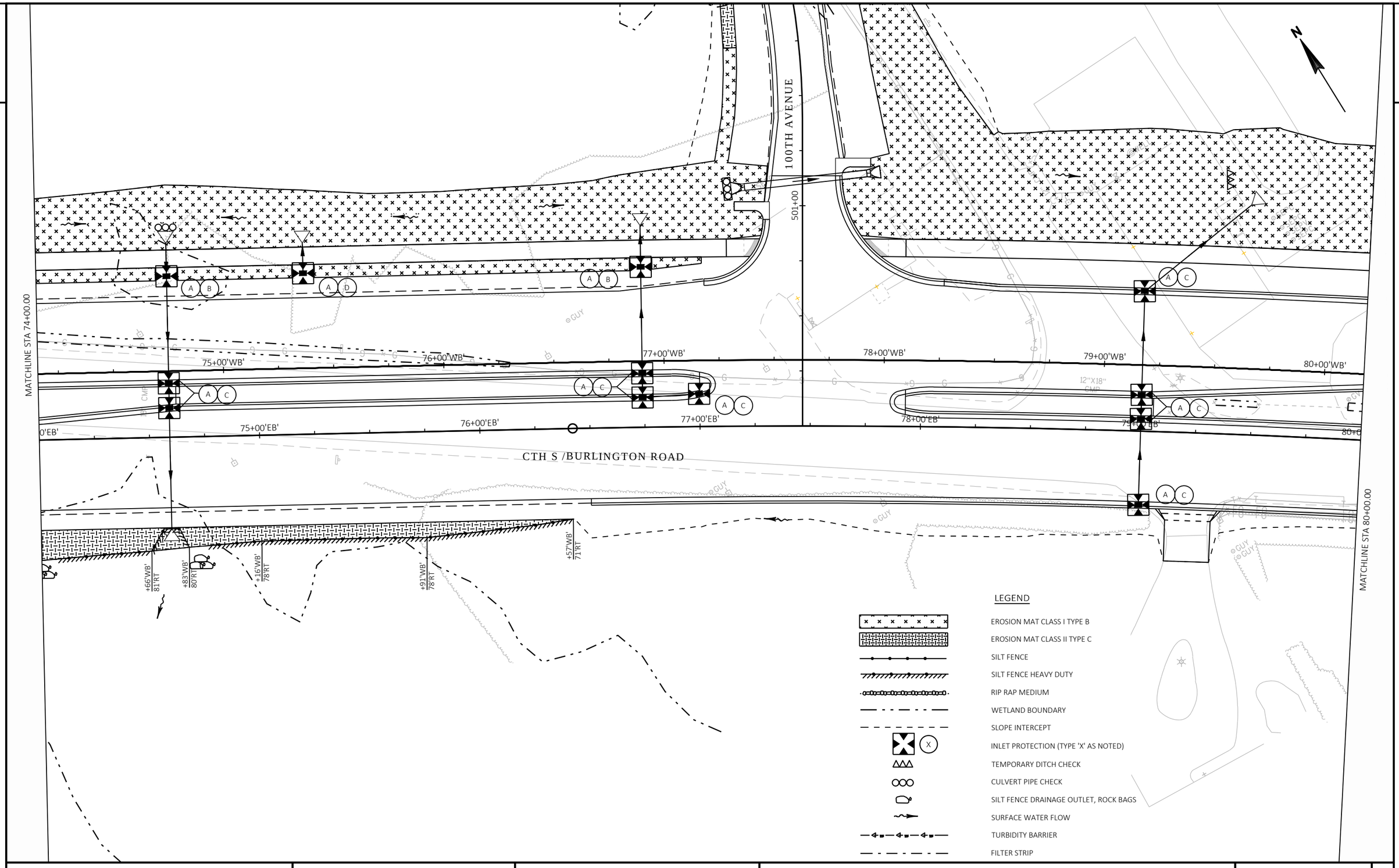

LEGEND

- EROSION MAT CLASS I TYPE B
- EROSION MAT CLASS II TYPE C
- SILT FENCE
- SILT FENCE HEAVY DUTY
- RIP RAP MEDIUM
- WETLAND BOUNDARY
- SLOPE INTERCEPT
- INLET PROTECTION (TYPE 'X' AS NOTED)
- TEMPORARY DITCH CHECK
- CULVERT PIPE CHECK
- SILT FENCE DRAINAGE OUTLET, ROCK BAGS
- SURFACE WATER FLOW
- TURBIDITY BARRIER
- FILTER STRIP

PROJECT NO: RD16-003	HWY: CTH S	COUNTY: KENOSHA	EROSION CONTROL	SHEET 121	E

FILE NAME : T:\1165811\CIVIL3D\1165811\SHEETSPLAN\022001-EC.DWG
LAYOUT NAME - 9
PLOT DATE : 5/11/2020 1:04 PM
PLOT BY : GUILLAMA, TINA
PLOT NAME :
PLOT SCALE : 1 IN:40 FT
WISDOT/CADDS SHEET 42

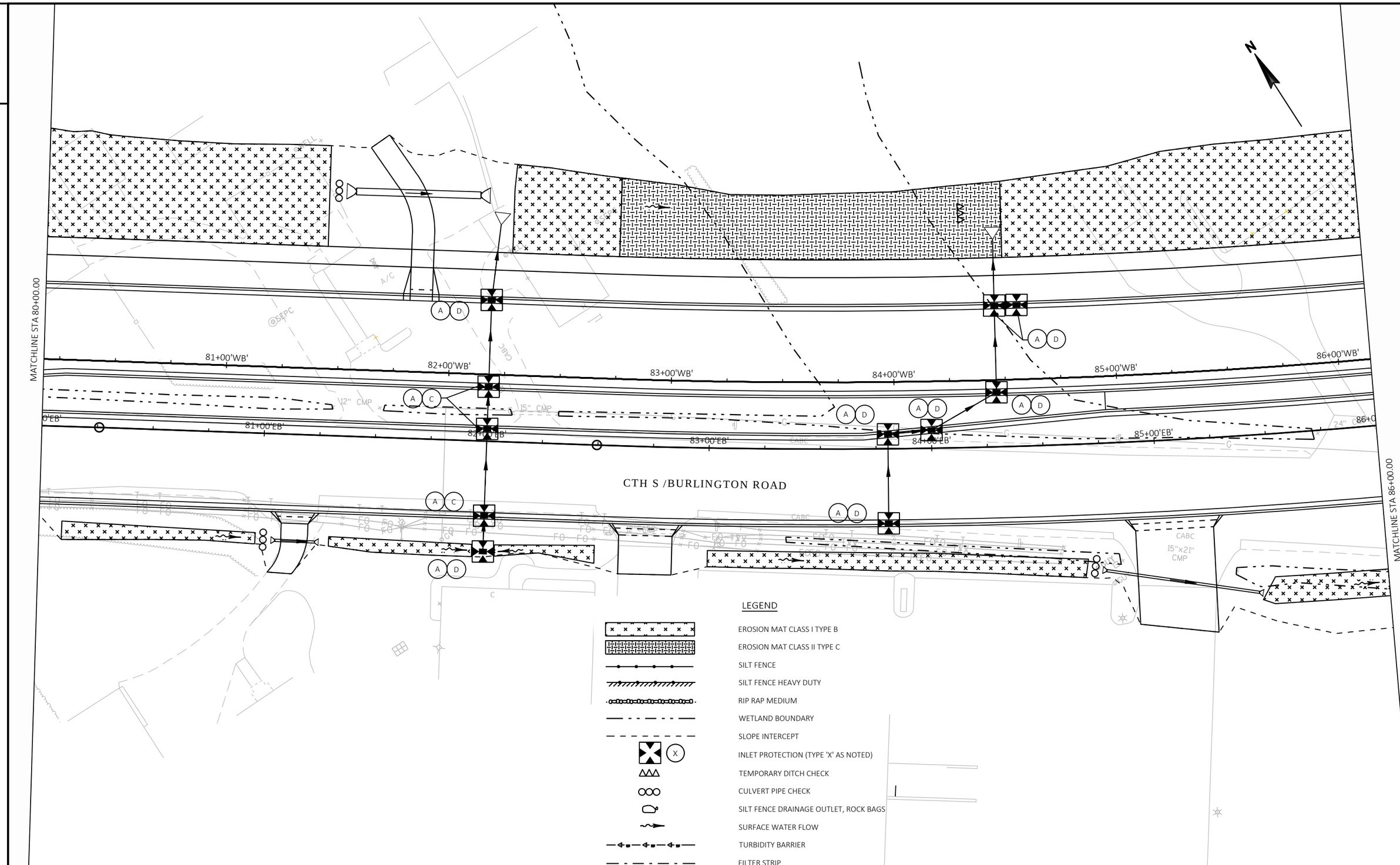

PROJECT NO: RD16-003	HWY: CTH S	COUNTY: KENOSHA	EROSION CONTROL	SHEET 122	E

FILE NAME : T:\1165811\CIVIL3D\1165811\SHEETSPLAN\022001-EC.DWG
LAYOUT NAME - 10
PLOT DATE : 5/11/2020 1:04 PM
PLOT BY : GUILLAMA, TINA
PLOT NAME :
PLOT SCALE : 1 IN:40 FT
WISDOT/CADDS SHEET 42

2

2

96TH AVE CONNECTOR

611+00

612+00

610+00

609+00

MATCHLINE STA 86+00.00

MATCHLINE STA 92+00.00

CTH S /BURLINGTON ROAD

CTH S /38TH ST

38TH STREET

87+00'WB'

88+00'WB'

89+00'WB'

90+00'WB'

91+00'WB'

92+00'WB'

87+00'EB'

88+00'EB'

89+00'EB'

90+00'EB'

91+00'EB'

92+00'EB'

33"x49" CMP

36"x48" CMP

FILTER STRIP

N

LEGEND

- EROSION MAT CLASS I TYPE B
- EROSION MAT CLASS II TYPE C
- SILT FENCE
- SILT FENCE HEAVY DUTY
- RIP RAP MEDIUM
- WETLAND BOUNDARY
- SLOPE INTERCEPT
- INLET PROTECTION (TYPE 'X' AS NOTED)
- TEMPORARY DITCH CHECK
- CULVERT PIPE CHECK
- SILT FENCE DRAINAGE OUTLET, ROCK BAGS
- SURFACE WATER FLOW
- TURBIDITY BARRIER
- FILTER STRIP

PROJECT NO: RD16-003	HWY: CTH S	COUNTY: KENOSHA	EROSION CONTROL	SHEET 123	E

FILE NAME : T:\1165811\CIVIL3D\1165811\SHEETSPLAN\022001-EC.DWG
LAYOUT NAME - 11

PLOT DATE : 5/11/2020 1:05 PM PLOT BY : GUILLAMA, TINA PLOT NAME : PLOT SCALE : 1 IN:40 FT

WISDOT/CADDS SHEET 42

2

2

MATCHLINE STA 92+00.00

MATCHLINE STA 98+00.00

N

CTH S /38TH ST

93+00'WB'
94+00'WB'
95+00'WB'
96+00'WB'
97+00'WB'
98+00

93+00'EB'
94+00'EB'
95+00'EB'
96+00'EB'
97+00'EB'

A B
A C
A D

SEPC
SEPV
GUY
CABC
36" CMP
CONCRETE WALL
FILTER STRIP
CHAIN LINK FENCE

LEGEND

- EROSION MAT CLASS I TYPE B
- EROSION MAT CLASS II TYPE C
- SILT FENCE
- SILT FENCE HEAVY DUTY
- RIP RAP MEDIUM
- WETLAND BOUNDARY
- SLOPE INTERCEPT
- INLET PROTECTION (TYPE 'X' AS NOTED)
- TEMPORARY DITCH CHECK
- CULVERT PIPE CHECK
- SILT FENCE DRAINAGE OUTLET, ROCK BAGS
- SURFACE WATER FLOW
- TURBIDITY BARRIER
- FILTER STRIP

PROJECT NO: RD16-003	HWY: CTH S	COUNTY: KENOSHA	EROSION CONTROL	SHEET 124	E

FILE NAME : T:\1165811\CIVIL3D\1165811\SHEETSPLAN\022001-EC.DWG
LAYOUT NAME - 12

PLOT DATE : 5/11/2020 1:05 PM PLOT BY : GUILLAMA, TINA PLOT NAME : PLOT SCALE : 1 IN:40 FT

WISDOT/CADDS SHEET 42

2

2

N

MATCHLINE STA 98+00.00

WB'

99+00'WB'

100+00'WB'

101+00'WB'

102+00'WB'

103+00'WB'

104+0

A B

A C

B'

99+00'EB'

100+00'EB'

101+00'EB'

102+00'EB'

103+00'EB'

104+0

CTH S /38TH ST

A C

MATCHLINE STA 104+00.00

+77'WB'
79'RT

LEGEND

- EROSION MAT CLASS I TYPE B
- EROSION MAT CLASS II TYPE C
- SILT FENCE
- SILT FENCE HEAVY DUTY
- RIP RAP MEDIUM
- WETLAND BOUNDARY
- SLOPE INTERCEPT
- INLET PROTECTION (TYPE 'X' AS NOTED) — X
- TEMPORARY DITCH CHECK
- CULVERT PIPE CHECK
- SILT FENCE DRAINAGE OUTLET, ROCK BAGS
- SURFACE WATER FLOW
- TURBIDITY BARRIER
- FILTER STRIP

PROJECT NO: RD16-003	HWY: CTH S	COUNTY: KENOSHA	EROSION CONTROL	SHEET 125	E

FILE NAME : T:\1165811\CIVIL3D\1165811\SHEETSPLAN\022001-EC.DWG
LAYOUT NAME - 13

PLOT DATE : 5/11/2020 1:05 PM PLOT BY : GUILLAMA, TINA PLOT NAME : PLOT SCALE : 1 IN:40 FT

WISDOT/CADDS SHEET 42

2

2

N

FILTER STRIP

MATCHLINE STA 104+00.00

0'WB' 105+00'WB' 106+00'WB' 107+00'WB' 108+00'WB' 109+00'WB' 110+0

0'EB' 105+00'EB' 106+00'EB' 107+00'EB' 108+00'EB' 109+00'EB' 110+

CHAIN LINK FENCE

CTH S /38TH ST

CABC

+87'WB' 76'RT

+00'WB' 90'RT

+25'WB' 84'RT

+50'WB' 83'RT

+00'WB' 85'RT

+75'WB' 83'RT

+00'WB' 86'RT

+23'WB' 80'RT

+76'WB' 79'RT

MATCHLINE STA 110+00.00

WOOD FENCE

CHAIN LINK FENCE

LEGEND

- EROSION MAT CLASS I TYPE B
- EROSION MAT CLASS II TYPE C
- SILT FENCE
- SILT FENCE HEAVY DUTY
- RIP RAP MEDIUM
- WETLAND BOUNDARY
- SLOPE INTERCEPT
- INLET PROTECTION (TYPE 'X' AS NOTED)
- TEMPORARY DITCH CHECK
- CULVERT PIPE CHECK
- SILT FENCE DRAINAGE OUTLET, ROCK BAGS
- SURFACE WATER FLOW
- TURBIDITY BARRIER
- FILTER STRIP

PROJECT NO: RD16-003	HWY: CTH S	COUNTY: KENOSHA	EROSION CONTROL	SHEET 126	E

FILE NAME : T:\1165811\CIVIL3D\1165811\SHEETSPLAN\022001-EC.DWG
LAYOUT NAME - 14

PLOT DATE : 5/11/2020 1:06 PM PLOT BY : GUILLAMA, TINA PLOT NAME : PLOT SCALE : 1 IN:40 FT

WISDOT/CADDS SHEET 42

2

2

N

FILTER STRIP

MATCHLINE STA 110+00.00

0'WB' 111+00'WB' 112+00'WB' 113+00'WB' 114+00'WB' 115+00'WB' 116+0

A B

A C

0'EB' 111+00'EB' 112+00'EB' 113+00'EB' 114+00'EB' 115+00'EB' 116+0

CTH S /38TH ST

A C

CHAIN LINK FENCE

+00'WB'
82 RT

MATCHLINE STA 116+00.00

END PROJECT
STA. 113+00'WB'
MATCH WISDOT ID 3210-00-75

LEGEND

- EROSION MAT CLASS I TYPE B
- EROSION MAT CLASS II TYPE C
- SILT FENCE
- SILT FENCE HEAVY DUTY
- RIP RAP MEDIUM
- WETLAND BOUNDARY
- SLOPE INTERCEPT
- INLET PROTECTION (TYPE 'X' AS NOTED) — X
- TEMPORARY DITCH CHECK
- CULVERT PIPE CHECK
- SILT FENCE DRAINAGE OUTLET, ROCK BAGS
- SURFACE WATER FLOW
- TURBIDITY BARRIER
- FILTER STRIP

PROJECT NO: RD16-003	HWY: CTH S	COUNTY: KENOSHA	EROSION CONTROL	SHEET 127	E

FILE NAME : T:\1165811\CIVIL3D\1165811\SHEETSPLAN\022001-EC.DWG
LAYOUT NAME - 15

PLOT DATE : 5/11/2020 1:06 PM PLOT BY : GUILLAMA, TINA PLOT NAME : PLOT SCALE : 1 IN:40 FT

WISDOT/CADDS SHEET 42

2

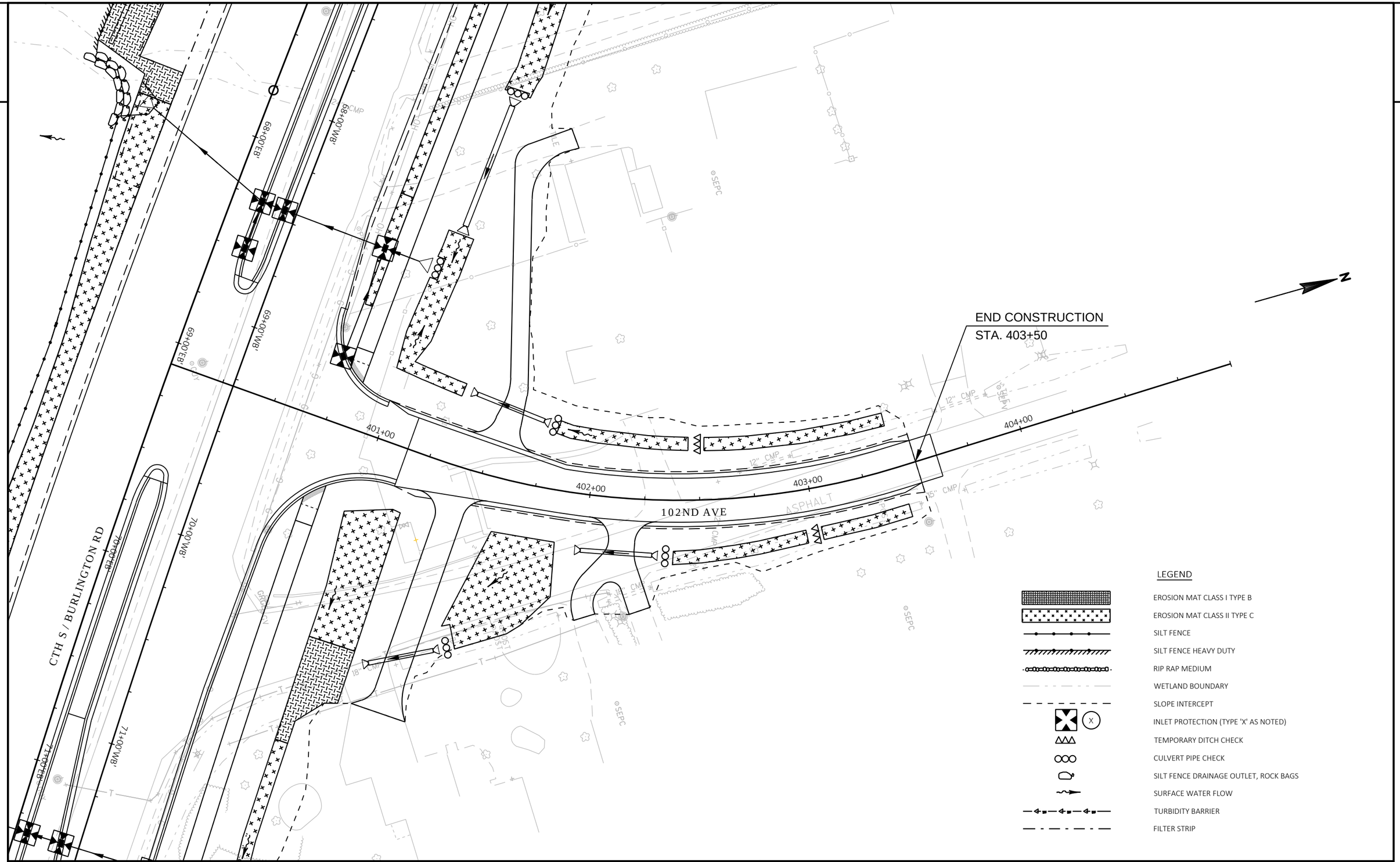

PROJECT NO: RD16-003	HWY: CTH S	COUNTY: KENOSHA	EROSION CONTROL - 102ND AVE	SHEET 128	E

FILE NAME : T:\1165811\CIVIL3D\1165811\SHEETSPLAN\022002-EC.DWG
LAYOUT NAME - 102ND AVE

PLOT DATE : 5/11/2020 1:12 PM PLOT BY : GUILLAMA, TINA PLOT NAME : PLOT SCALE : 1 IN:40 FT

2

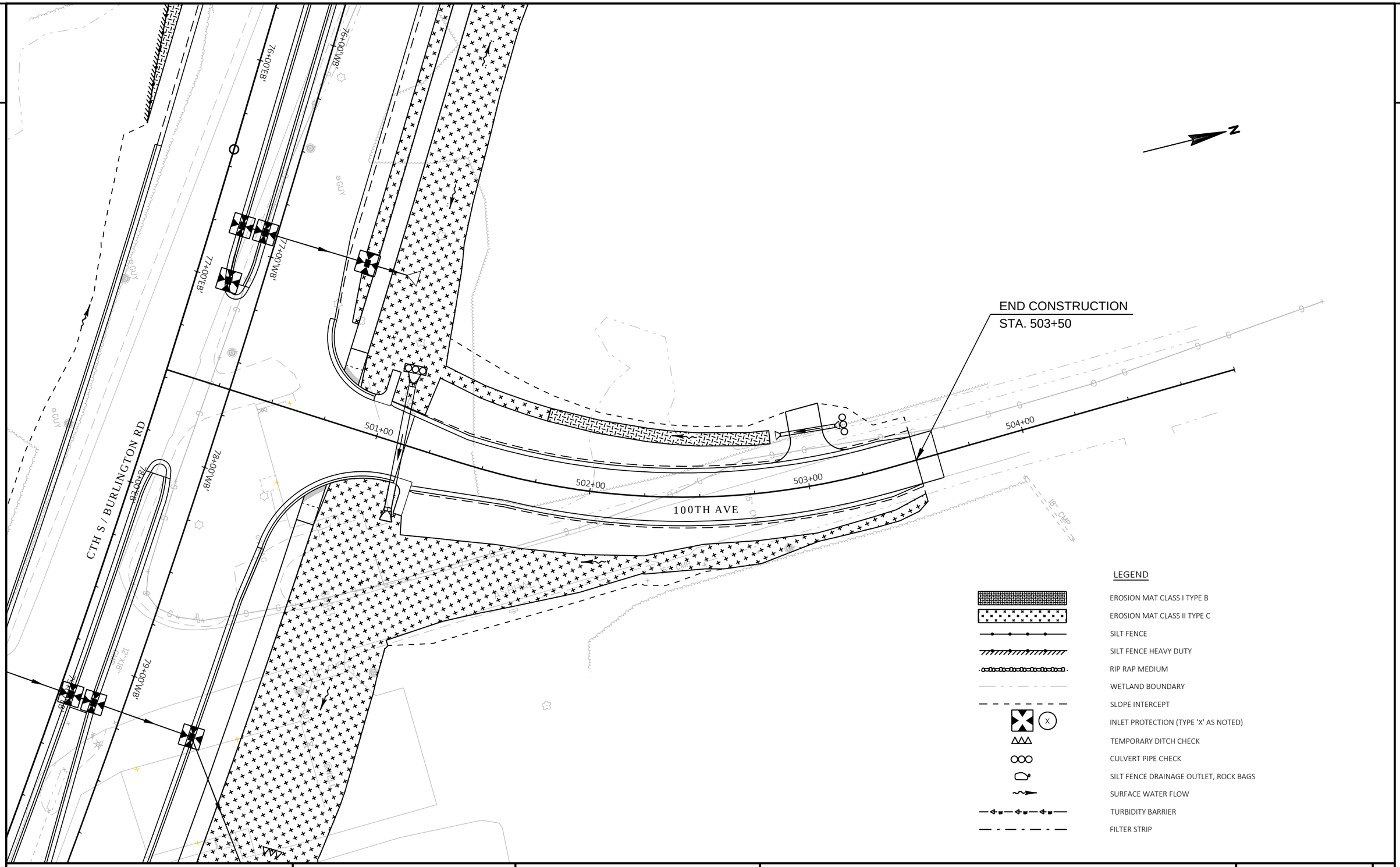

PROJECT NO: RD16-003	HWY: CTH S	COUNTY: KENOSHA	EROSION CONTROL - 100TH AVE	SHEET 129	E

FILE NAME : T:\1165811\CIVIL3D\1165811\SHEETSPLAN\022002-EC.DWG
LAYOUT NAME - 100TH AVE

PLOT DATE : 5/11/2020 1:12 PM PLOT BY : GUILLAMA, TINA PLOT NAME : PLOT SCALE : 1 IN:40 FT

2

LEGEND

- EROSION MAT CLASS I TYPE B
- EROSION MAT CLASS II TYPE C
- SILT FENCE
- SILT FENCE HEAVY DUTY
- RIP RAP MEDIUM
- WETLAND BOUNDARY
- SLOPE INTERCEPT
- INLET PROTECTION (TYPE 'X' AS NOTED)
- TEMPORARY DITCH CHECK
- CULVERT PIPE CHECK
- SILT FENCE DRAINAGE OUTLET, ROCK BAGS
- SURFACE WATER FLOW
- TURBIDITY BARRIER
- FILTER STRIP

N

FILTER STRIP

MATCHLINE STA 612+00.00

96TH AVE CONNECTOR

613+00

614+00

615+00

704+00

703+00

702+00

END CONSTRUCTION
STA. 615+52.72

FILTER STRIP

96TH AVENUE

OH

W

ASPHALT

12" CMP

VLV

PROJECT NO: RD16-003	HWY: CTH S	COUNTY: KENOSHA	EROSION CONTROL - 38TH ST	SHEET 130	E

FILE NAME : T:\1165811\CIVIL3D\1165811\SHEETSPLAN\022002-EC.DWG
LAYOUT NAME - 38TH ST(2)

PLOT DATE : 5/11/2020 1:13 PM PLOT BY : GUILLAMA, TINA PLOT NAME : PLOT SCALE : 1 IN:40 FT

2

REMOVALS LEGEND

- RI — REMOVING INLET
- RP — REMOVING STORM SEWER PIPE

R/W

20F STA 27+79.22'WB', 33.5' LT — ADJUST INLET COVERS

20 STA 27+78.29'WB', 16.8' LT — ADJUST MH COVER

20D STA 27+57.43'WB', 10.7' RT — INLETS 4-HM

20B STA 27+56.82'WB', 26.1' RT — INLETS 4-HM

20E STA 27+76.05'WB', 5.5' RT — MANHOLES 4-J, FLAT SLAB TOP, 2' DIA OPENING REQ'D

11 STA 27+73.99'WB', 57.3' RT — ADJUST MH COVER

11C STA 27+74.75'WB', 73.4' RT — MH COVER-J

11B STA 27+58.11'WB', 89.7' RT — INLETS 2x3-HM

CTH S WB R/L

CTH S EB C/L

CTH S

AMAZON WEST DRIVEWAY

21 STA 29+78.89'WB', 15.6' LT — ADJUST MH COVER

21A STA 29+25.00'WB', 13.5' RT — INLETS 2x3-HM

21B STA 29+78.77'WB', 13.5' RT — INLETS 2x3-HM

12 STA 29+81.45'WB', 51.3' RT — ADJUST MH COVER

SLOPE INTERCEPT

23A STA 31+30.39'WB', 69.5' LT — CATCH BASINS MEDIAN 1G-MS

22A STA 30+58.57'WB', 33.5' LT — INLETS 2x3-HM

22 STA 30+58.57'WB', 8.7' LT — ADJUST MH COVER

22C STA 30+58.57'WB', 13.5' RT — INLETS 2x3-HM

22B STA 30+58.86'WB', 26.4' RT — INLETS 2x3-HM

13 STA 30+76.98'WB', 49.4' RT — ADJUST MH COVER

13A STA 30+77.30'WB', 65.0' RT — INLETS 2x3-HM

23 STA 31+80.57'WB', 3.1' LT — ADJUST MH COVER

MATCHLINE STA 31+75.00

TLE

27+00 28+00 29+00 30+00 31+00

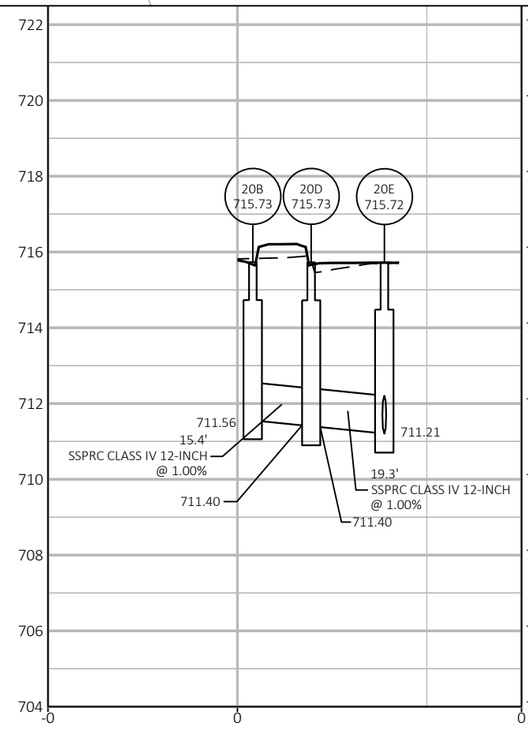

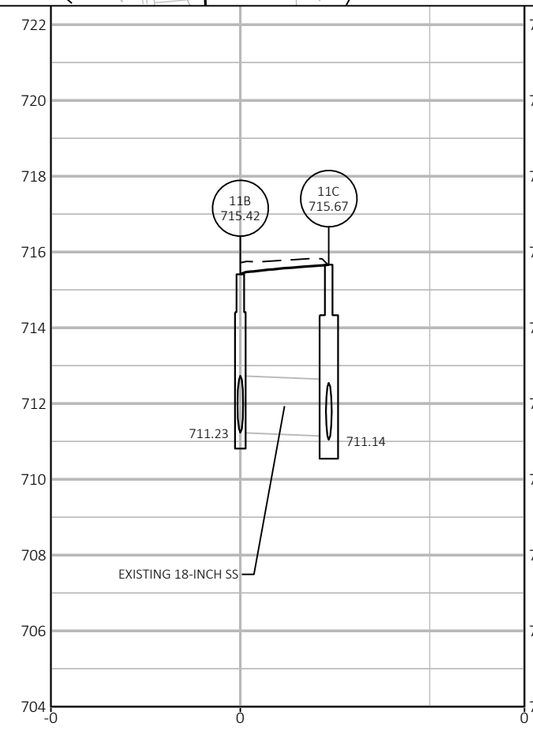

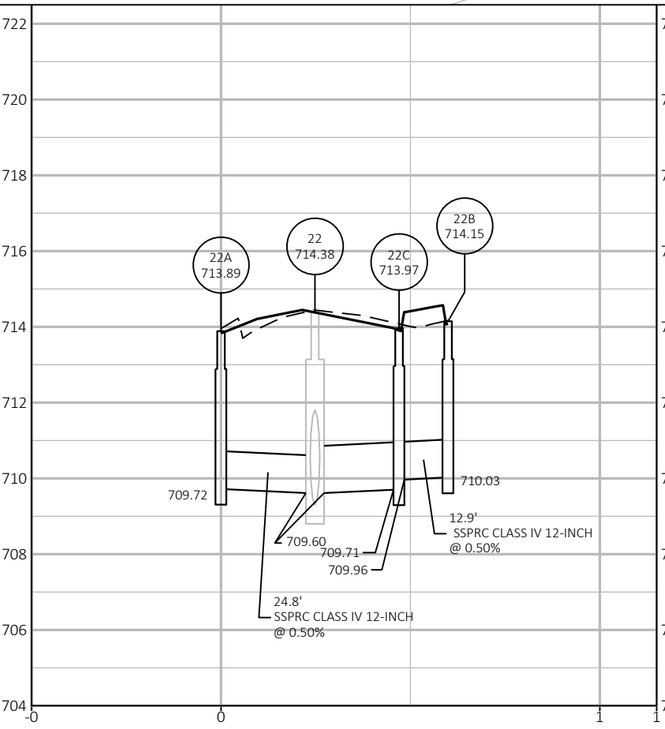

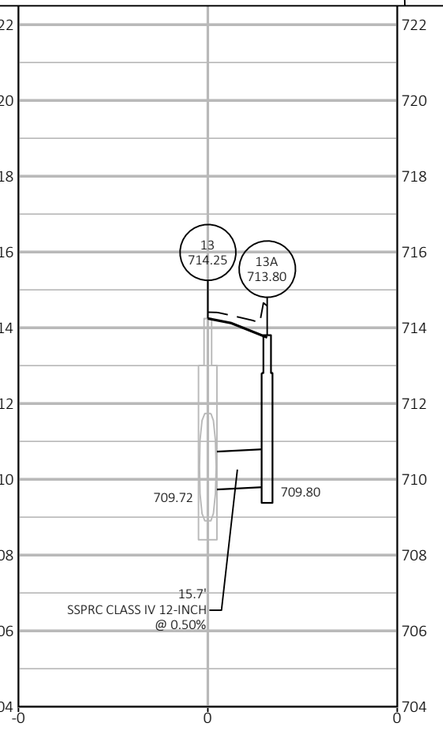

PROJECT NO: RD16-003	HWY: CTH S	COUNTY: KENOSHA	STORM SEWER	SHEET 131	E

FILE NAME : T:\1165811\CIVIL3D\1165811\SHEETSPLAN\022501-SS.DWG
LAYOUT NAME - 1

PLOT DATE : 5/11/2020 1:20 PM PLOT BY : GUILLAMA, TINA PLOT NAME : PLOT SCALE : 1 IN:40 FT

WISDOT/CADDS SHEET 41

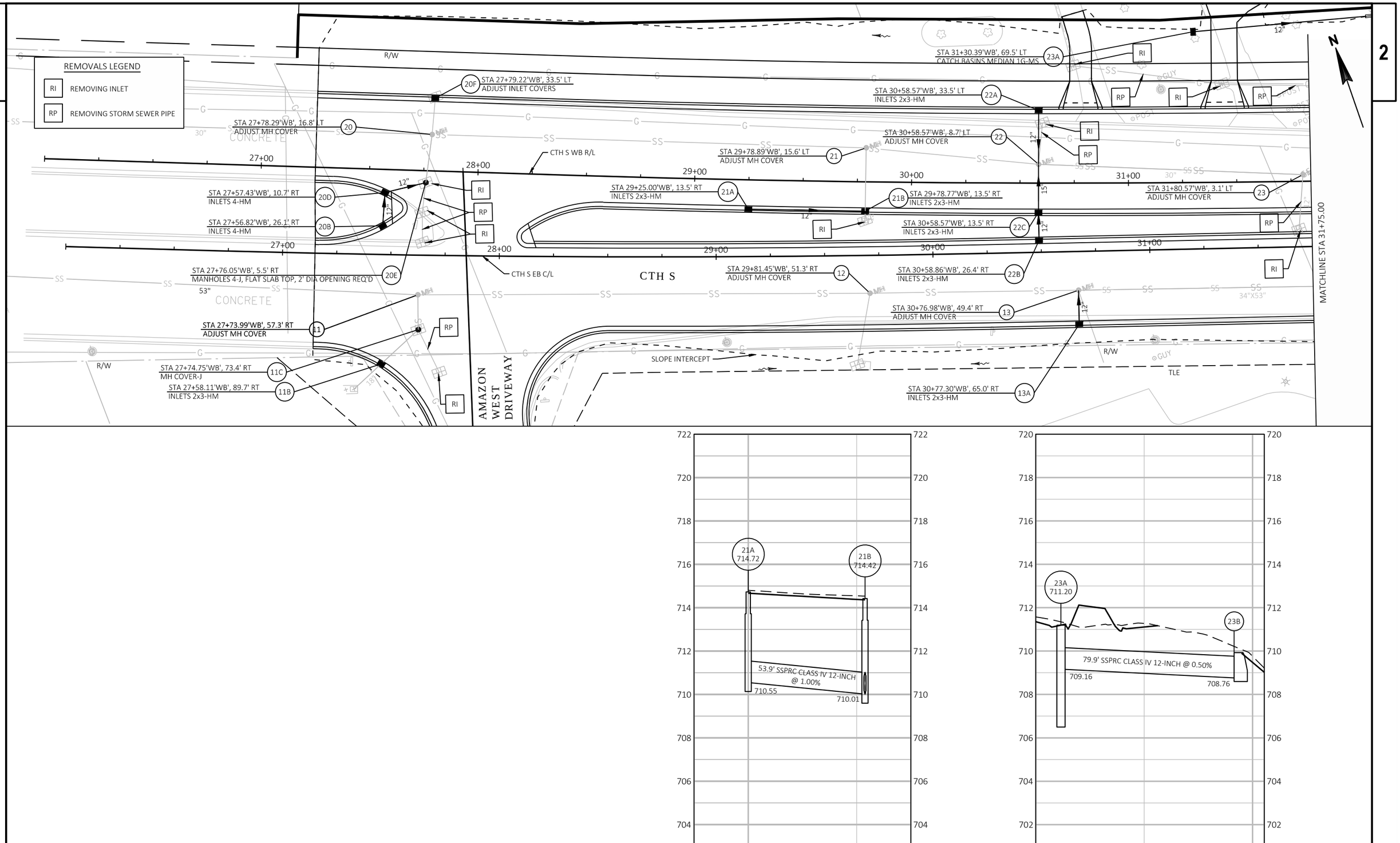

PROJECT NO: RD16-003	HWY: CTH S	COUNTY: KENOSHA	STORM SEWER	SHEET 132	E

FILE NAME : T:\1165811\CIVIL3D\1165811\SHEETSPLAN\022501-SS.DWG
LAYOUT NAME - 1 (B)
PLOT DATE : 5/11/2020 1:20 PM
PLOT BY : GUILLAMA, TINA
PLOT NAME :
PLOT SCALE : 1 IN:40 FT
WISDOT/CADDS SHEET 41

2

23B STA 32+10.84'WB', 75.6' LT
APRON ENDWALLS FOR CPRC 12-INCH

25 STA 32+42.33'WB', 65.4' LT
APRON ENDWALLS FOR CPRC 30-INCH

24 STA 32+26.25'WB', 26.6' LT
MANHOLES 6-J

24A STA 32+05.23'WB', 43.1' LT
ADJUST INLET COVER

30C STA 33+80.83'WB', 66.1' LT
APRON ENDWALLS FOR CPRC 15-INCH

30B STA 33+80.83'WB', 33.5' LT
CATCH BASINS 2x3-HM

30A STA 33+80.83'WB', 5.5' RT
INLETS 2x3-HM

15A STA 33+80.83'WB', 24.5' RT
INLETS 2x3-HM

15 STA 33+80.83'WB', 50.0' RT
ADJUST MH COVER

14 STA 32+36.37'WB', 48.6' RT
ADJUST MH COVER

15D STA 33+80.89'WB', 59.5' RT
MANHOLES 4-J

15B STA 33+70.83'WB', 63.5' RT
INLETS 4-HM

WETLAND BOUNDARY

CTH S

CTH S WB R/L

CTH S EB C/L

R/W

SLOPE INTERCEPT
TLE

35C STA 36+78.09'WB', 71.1' LT
APRON ENDWALLS FOR CPRC 15-INCH

35B STA 36+78.09'WB', 33.5' LT
CATCH BASINS 2x3-HM

35A STA 36+78.09'WB', 5.5' RT
INLETS 2x3-HM

16A STA 36+78.09'WB', 24.5' RT
INLETS 2x3-HM

16 STA 36+78.09'WB', 55.1' RT
ADJUST MH COVER

16B STA 36+09.21'WB', 72.5' RT
INLETS 2x3-HM

16C STA 36+77.17'WB', 72.5' RT
INLETS 2x3-HM

16D STA 36+77.28'WB', 84.7' RT
EXISTING INLET

MATCHLINE STA 31+75.00

MATCHLINE STA 37+50.00

REMOVALS LEGEND

RI REMOVING INLET

RP REMOVING STORM SEWER PIPE

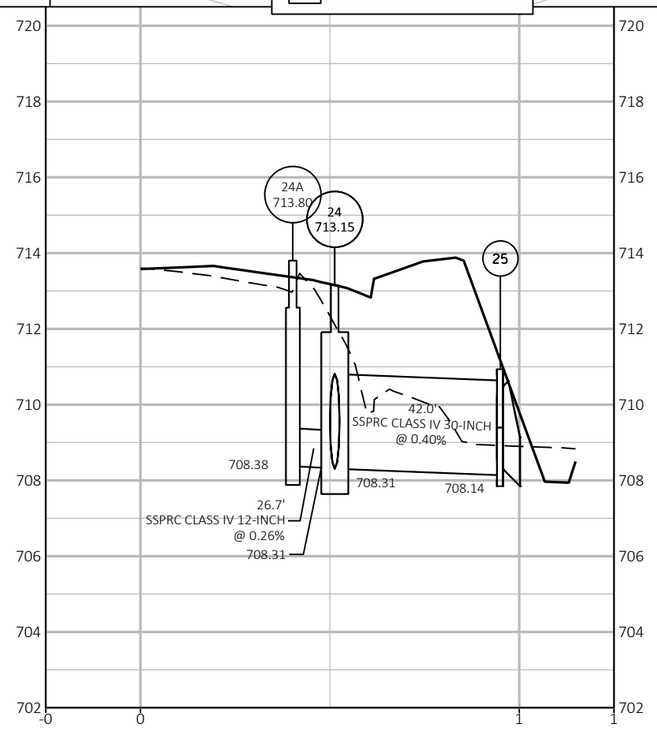

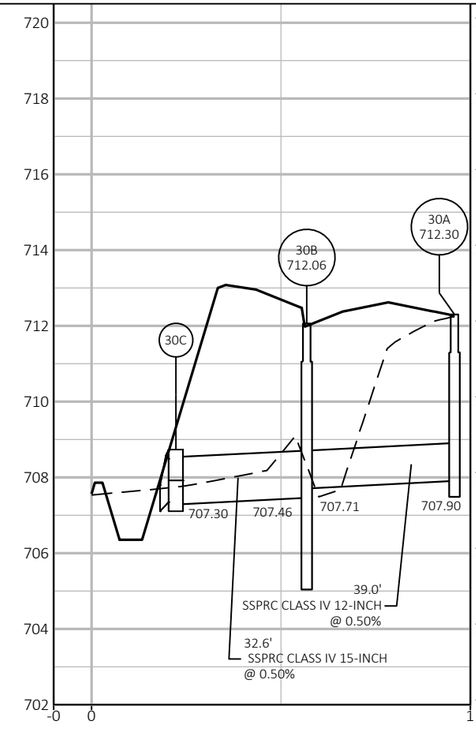

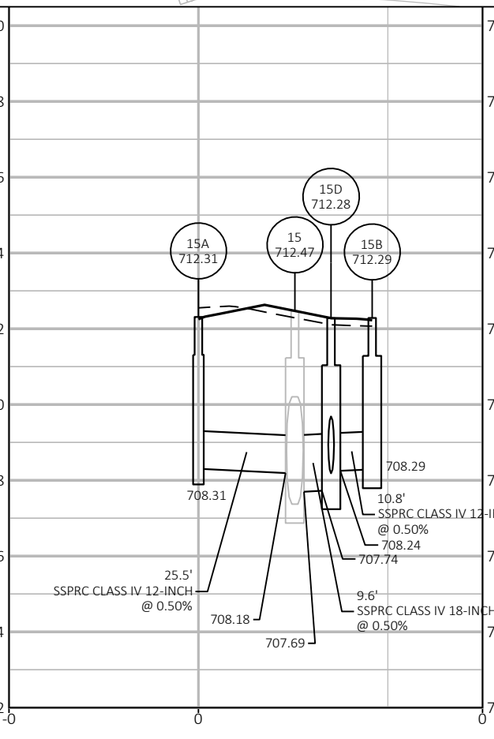

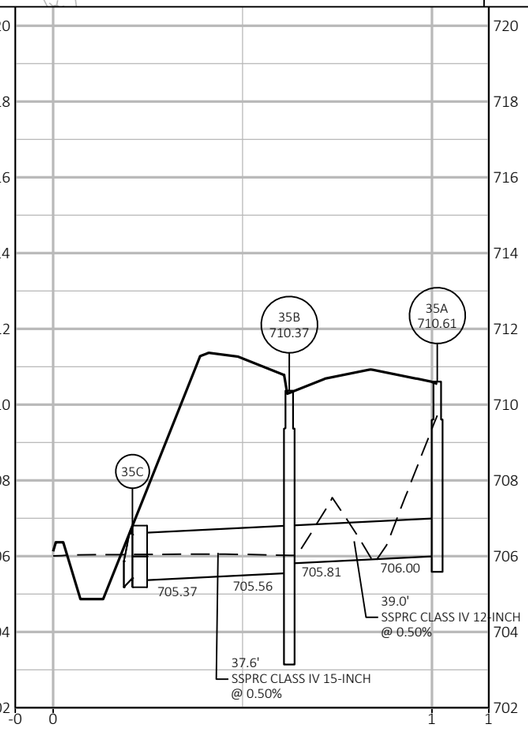

PROJECT NO: RD16-003	HWY: CTH S	COUNTY: KENOSHA	STORM SEWER	SHEET 133	E

FILE NAME : T:\1165811\CIVIL3D\1165811\SHEETSPLAN\022501-SS.DWG
LAYOUT NAME - 2

PLOT DATE : 5/11/2020 1:21 PM

PLOT BY : GUILLAMA, TINA

PLOT NAME :

PLOT SCALE : 1 IN:40 FT

WISDOT/CADDS SHEET 41

2

23B STA 32+10.84'WB', 75.6' LT
APRON ENDWALLS FOR CPRC 12-INCH

25 STA 32+42.33'WB', 65.4' LT
APRON ENDWALLS FOR CPRC 30-INCH

RP

12"

30"

24 STA 32+26.25'WB', 26.6' LT
MANHOLES 6-J

24A STA 32+05.23'WB', 43.1' LT
ADJUST INLET COVER

MATCHLINE STA 31+75.00

32+00 33+00 34+00 35+00 36+00 37+00

30C STA 33+80.83'WB', 66.1' LT
APRON ENDWALLS FOR CPRC 15-INCH

WETLAND BOUNDARY

15"

12"

30B STA 33+80.83'WB', 33.5' LT
CATCH BASINS 2x3-HM

30A STA 33+80.83'WB', 5.5' RT
INLETS 2x3-HM

CTH S WB R/L

CTH S

CTH S EB C/L

STA 36+78.09'WB', 71.1' LT
APRON ENDWALLS FOR CPRC 15-INCH 35C

GUY POLE

STA 36+78.09'WB', 33.5' LT
CATCH BASINS 2x3-HM 35B

STA 36+78.09'WB', 5.5' RT
INLETS 2x3-HM 35A

15A STA 33+80.83'WB', 24.5' RT
INLETS 2x3-HM

RP

RI

18"

14 STA 32+36.37'WB', 48.6' RT
ADJUST MH COVER

15 STA 33+80.83'WB', 50.0' RT
ADJUST MH COVER

34"X53"

R/W

RP

RI

15D STA 33+80.89'WB', 59.5' RT
MANHOLES 4-J

15B STA 33+70.83'WB', 63.5' RT
INLETS 4-HM

SLOPE INTERCEPT
TLE

STA 36+78.09'WB', 24.5' RT
INLETS 2x3-HM 16A

STA 36+78.09'WB', 55.1' RT
ADJUST MH COVER 16

RP

RI

STA 36+09.21'WB', 72.5' RT
INLETS 2x3-HM 16B

STA 36+77.17'WB', 72.5' RT
INLETS 2x3-HM 16C

STA 36+77.28'WB', 84.7' RT
EXISTING INLET 16D

MATCHLINE STA 37+50.00

N

REMOVALS LEGEND

RI REMOVING INLET

RP REMOVING STORM SEWER PIPE

716 714 712 710 708 706 704 702 700 698

-0 0 1 1

16A 710.62

16 710.68

16C 710.37

16B 710.75

67.6' SSPRC CLASS IV 12-INCH
@ 0.50%

706.62

705.92

706.26

706.60

705.92

30.6'
SSPRC CLASS IV 12-INCH
@ 0.50%

706.01

17.4'
SSPRC CLASS IV 18-INCH
@ 0.50%

PROJECT NO: RD16-003	HWY: CTH S	COUNTY: KENOSHA	STORM SEWER	SHEET 134	E

FILE NAME : T:\1165811\CIVIL3D\1165811\SHEETSPLAN\022501-SS.DWG
LAYOUT NAME - 2 (B)

PLOT DATE : 5/11/2020 1:22 PM PLOT BY : GUILLAMA, TINA PLOT NAME : PLOT SCALE : 1 IN:40 FT

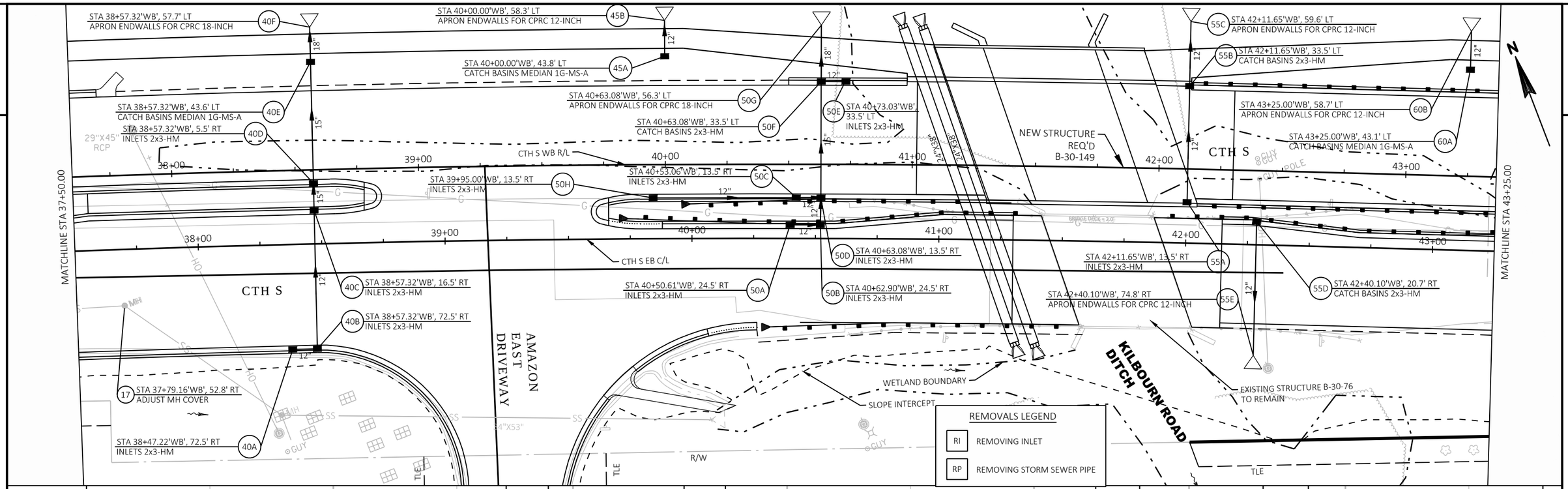

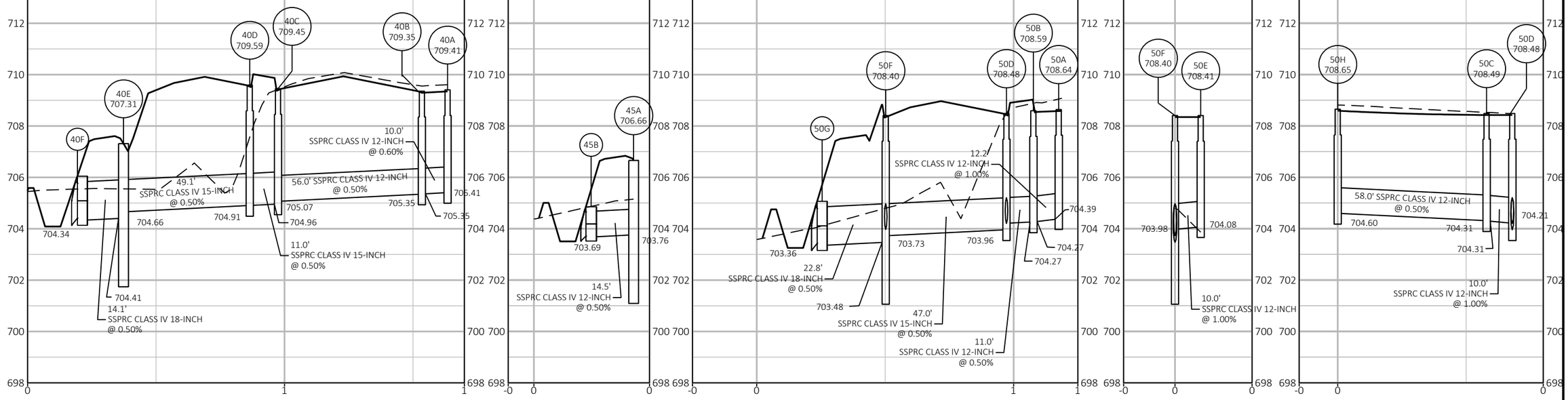

PROJECT NO: RD16-003	HWY: CTH S	COUNTY: KENOSHA	STORM SEWER	SHEET 135 E

2

STA 38+57.32'WB', 57.7' LT
APRON ENDWALLS FOR CPRC 18-INCH
40F

STA 40+00.00'WB', 58.3' LT
APRON ENDWALLS FOR CPRC 12-INCH
45B

STA 40+00.00'WB', 43.8' LT
CATCH BASINS MEDIAN 1G-MS-A
45A

STA 38+57.32'WB', 43.6' LT
CATCH BASINS MEDIAN 1G-MS-A
40E

STA 38+57.32'WB', 5.5' RT
INLETS 2x3-HM
40D

STA 40+63.08'WB', 56.3' LT
APRON ENDWALLS FOR CPRC 18-INCH
50G

STA 40+63.08'WB', 33.5' LT
CATCH BASINS 2x3-HM
50F

STA 40+73.03'WB', 33.5' LT
INLETS 2x3-HM
50E

STA 42+11.65'WB', 59.6' LT
APRON ENDWALLS FOR CPRC 12-INCH
55C

STA 42+11.65'WB', 33.5' LT
CATCH BASINS 2x3-HM
55B

STA 43+25.00'WB', 58.7' LT
APRON ENDWALLS FOR CPRC 12-INCH
60B

STA 43+25.00'WB', 43.1' LT
CATCH BASINS MEDIAN 1G-MS-A
60A

NEW STRUCTURE
REQ'D
B-30-149

29"X45" RCP

CTH S WB R/L

STA 39+95.00'WB', 13.5' RT
INLETS 2x3-HM
50H

STA 40+53.06'WB', 13.5' RT
INLETS 2x3-HM
50C

CTH S EB C/L

STA 38+57.32'WB', 16.5' RT
INLETS 2x3-HM
40C

STA 38+57.32'WB', 72.5' RT
INLETS 2x3-HM
40B

STA 40+50.61'WB', 24.5' RT
INLETS 2x3-HM
50A

STA 40+62.90'WB', 24.5' RT
INLETS 2x3-HM
50B

STA 40+63.08'WB', 13.5' RT
INLETS 2x3-HM
50D

STA 42+11.65'WB', 13.5' RT
INLETS 2x3-HM
55A

STA 42+40.10'WB', 74.8' RT
APRON ENDWALLS FOR CPRC 12-INCH
55E

STA 42+40.10'WB', 20.7' RT
CATCH BASINS 2x3-HM
55D

STA 37+79.16'WB', 52.8' RT
ADJUST MH COVER
17

STA 38+47.22'WB', 72.5' RT
INLETS 2x3-HM
40A

MATCHLINE STA 37+50.00

MATCHLINE STA 43+25.00

CTH S

AMAZON
EAST
DRIVEWAY

KILBOURN ROAD
DITCH

WETLAND BOUNDARY

SLOPE INTERCEPT

EXISTING STRUCTURE B-30-76
TO REMAIN

R/W

TLE

REMOVALS LEGEND

RI	REMOVING INLET
RP	REMOVING STORM SEWER PIPE

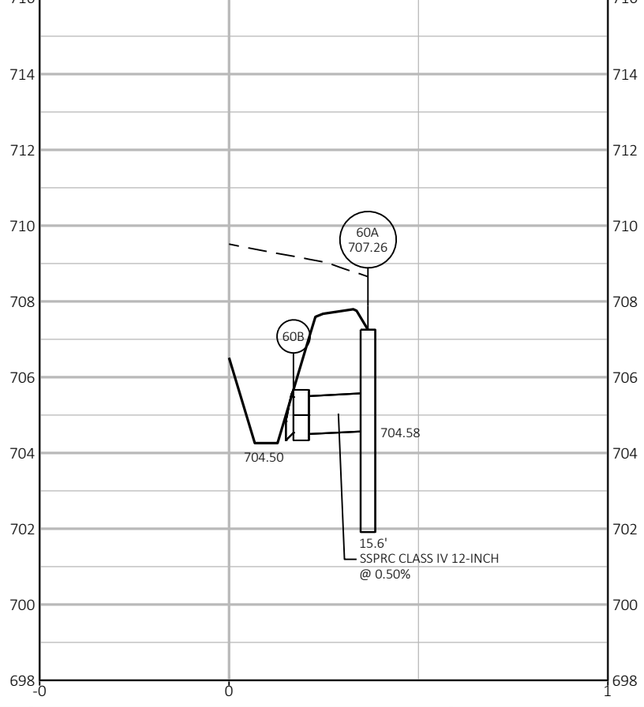

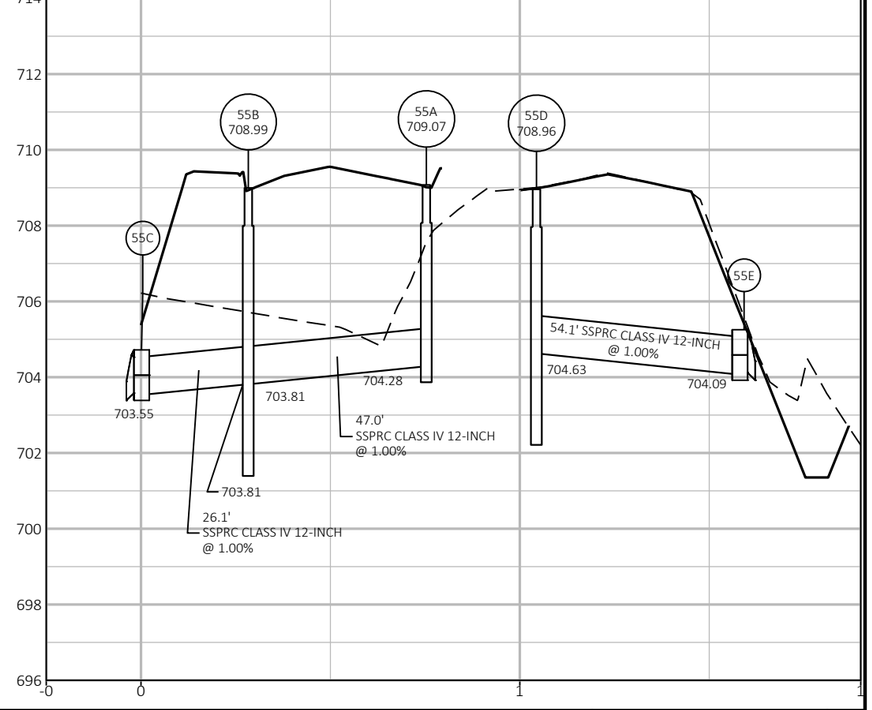

PROJECT NO: RD16-003	HWY: CTH S	COUNTY: KENOSHA	STORM SEWER	SHEET 136	E

FILE NAME : T:\1165811\CIVIL3D\1165811\SHEETSPLAN\022501-SS.DWG
LAYOUT NAME - 3 (B)
PLOT DATE : 5/11/2020 1:23 PM
PLOT BY : GUILLAMA, TINA
PLOT NAME :
PLOT SCALE : 1 IN:40 FT
WISDOT/CADDS SHEET 41

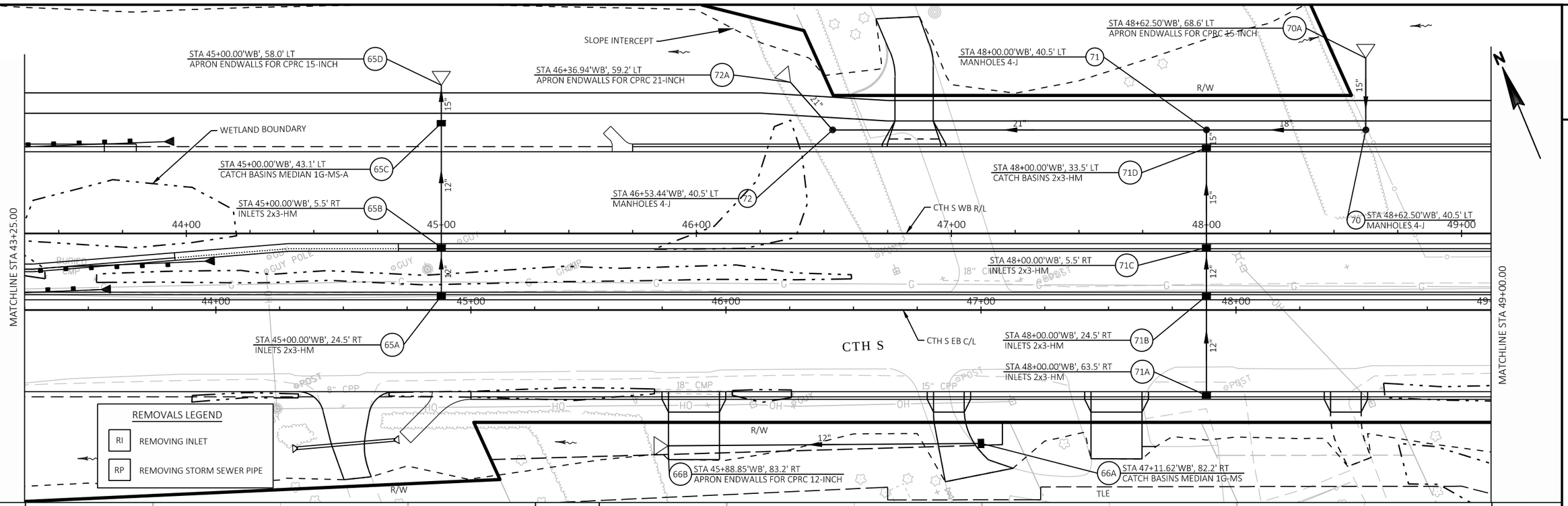

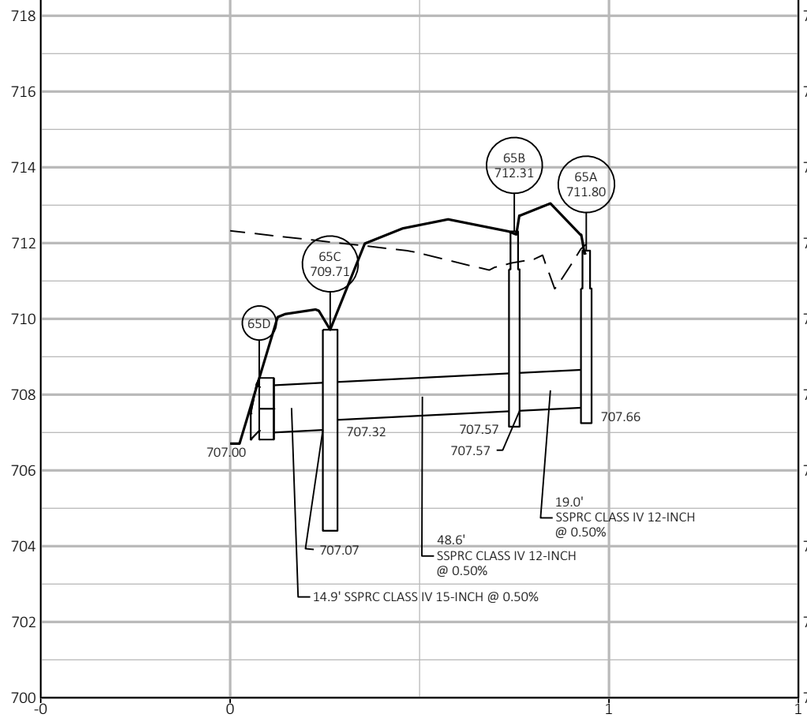

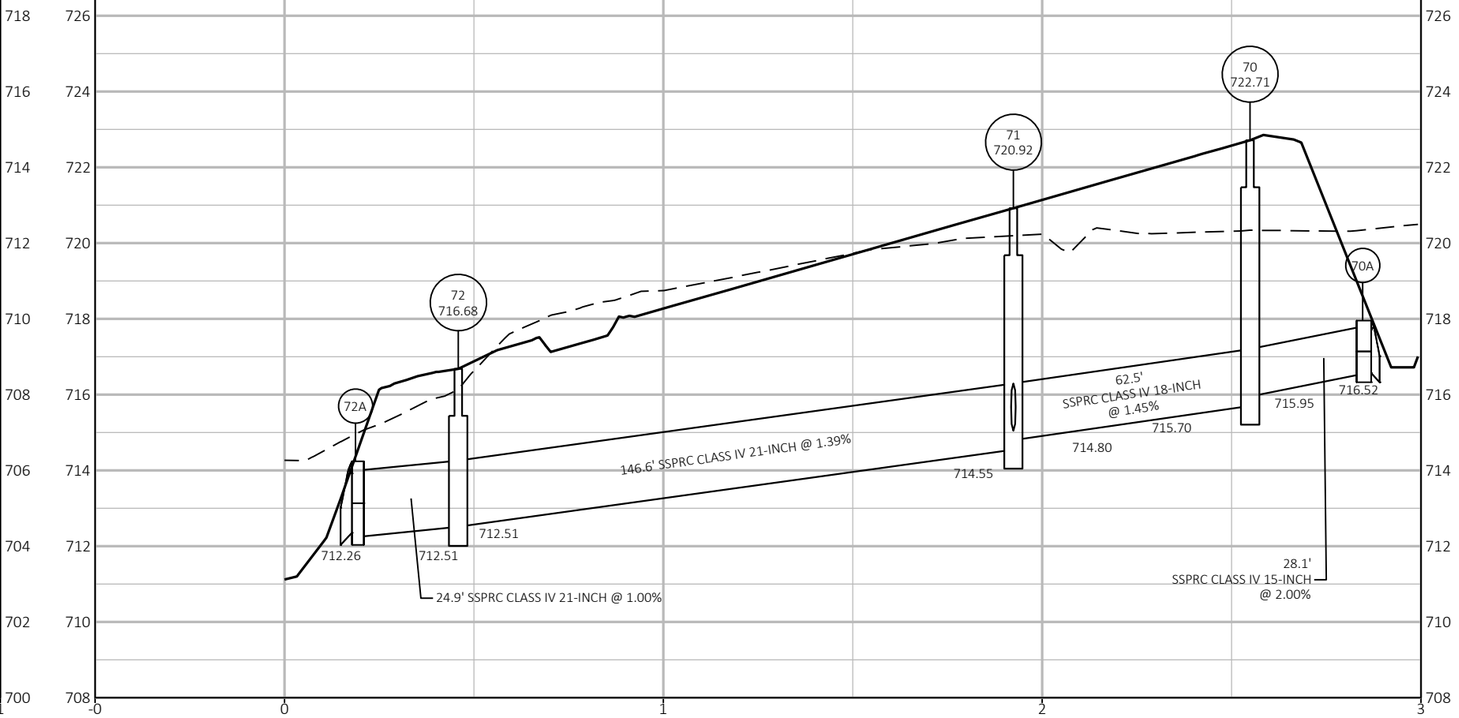

PROJECT NO: RD16-003	HWY: CTH S	COUNTY: KENOSHA	STORM SEWER	SHEET 137	E

FILE NAME : T:\1165811\CIVIL3D\1165811\SHEETSPLAN\022501-SS.DWG
LAYOUT NAME - 4

PLOT DATE : 5/11/2020 1:24 PM PLOT BY : GUILLAMA, TINA PLOT NAME : PLOT SCALE : 1 IN:40 FT

WISDOT/CADDS SHEET 41

2

MATCHLINE STA 43+25.00

MATCHLINE STA 49+00.00

STA 45+00.00'WB', 58.0' LT
APRON ENDWALLS FOR CPRC 15-INCH (65D)

SLOPE INTERCEPT

STA 46+36.94'WB', 59.2' LT
APRON ENDWALLS FOR CPRC 21-INCH (72A)

STA 48+62.50'WB', 68.6' LT
APRON ENDWALLS FOR CPRC 15-INCH (70A)

STA 48+00.00'WB', 40.5' LT
MANHOLES 4-J (71)

WETLAND BOUNDARY

STA 45+00.00'WB', 43.1' LT
CATCH BASINS MEDIAN 1G-MS-A (65C)

STA 46+53.44'WB', 40.5' LT
MANHOLES 4-J (72)

STA 48+00.00'WB', 33.5' LT
CATCH BASINS 2x3-HM (71D)

STA 45+00.00'WB', 5.5' RT
INLETS 2x3-HM (65B)

CTH S WB R/L

STA 48+62.50'WB', 40.5' LT
MANHOLES 4-J (70)

STA 48+00.00'WB', 5.5' RT
INLETS 2x3-HM (71C)

STA 45+00.00'WB', 24.5' RT
INLETS 2x3-HM (65A)

CTH S

CTH S EB C/L

STA 48+00.00'WB', 24.5' RT
INLETS 2x3-HM (71B)

STA 48+00.00'WB', 63.5' RT
INLETS 2x3-HM (71A)

REMOVALS LEGEND

RI REMOVING INLET

RP REMOVING STORM SEWER PIPE

STA 45+88.85'WB', 83.2' RT
APRON ENDWALLS FOR CPRC 12-INCH (66B)

STA 47+11.62'WB', 82.2' RT
CATCH BASINS MEDIAN 1G-MS (66A)

R/W

TLE

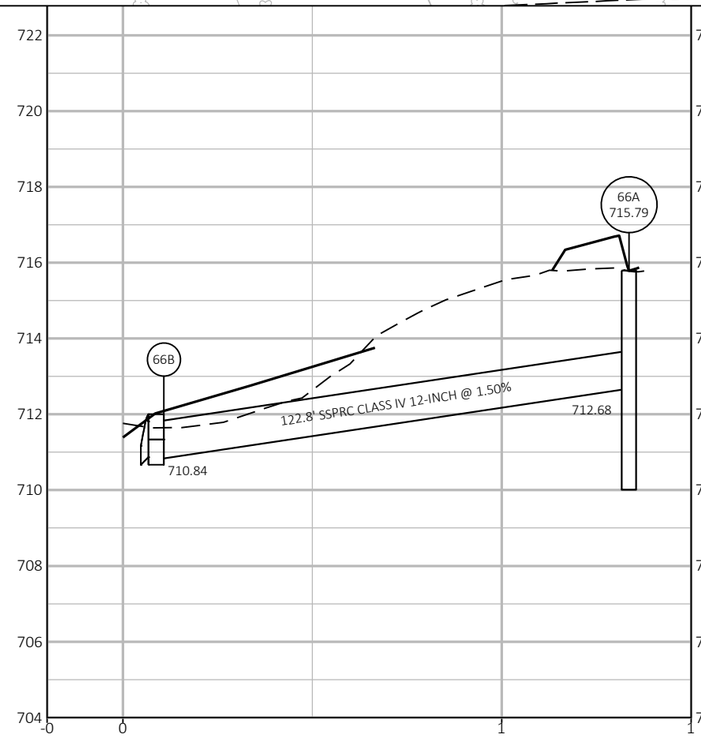

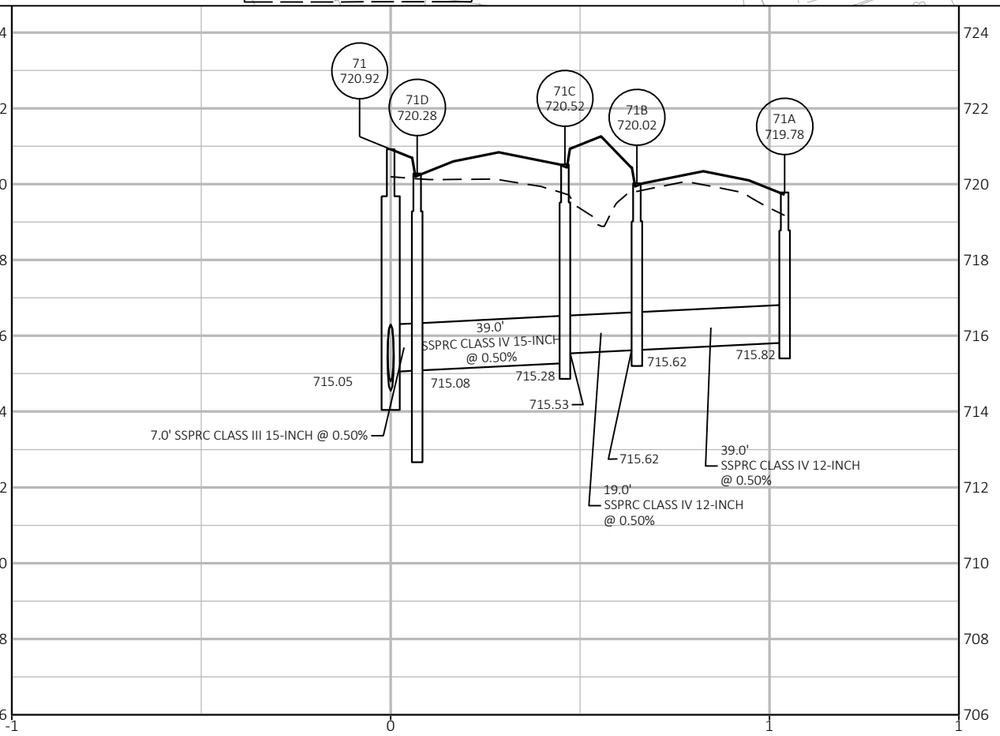

PROJECT NO: RD16-003	HWY: CTH S	COUNTY: KENOSHA	STORM SEWER	SHEET 138	E

FILE NAME : T:\1165811\CIVIL3D\1165811\SHEETSPLAN\022501-SS.DWG
LAYOUT NAME - 4 (B)

PLOT DATE : 5/11/2020 1:25 PM

PLOT BY : GUILLAMA, TINA

PLOT NAME :

PLOT SCALE : 1 IN:40 FT

2

REMOVALS LEGEND

RI	REMOVING INLET
RP	REMOVING STORM SEWER PIPE

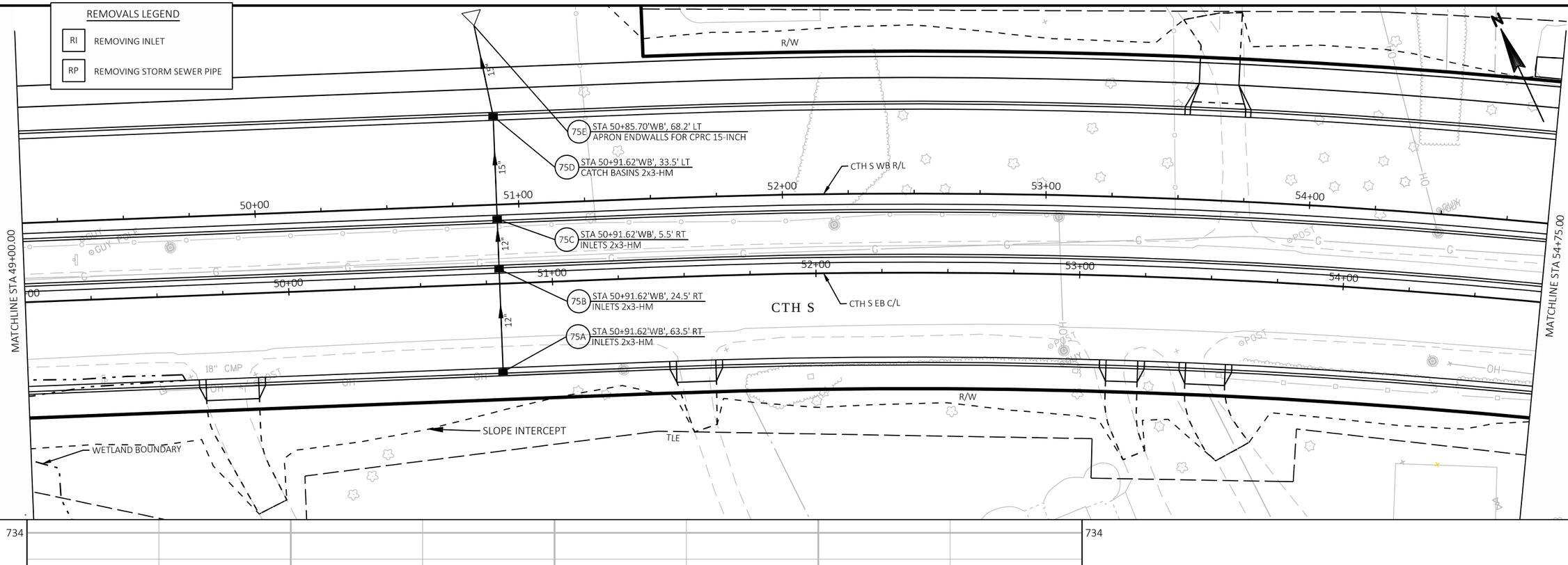

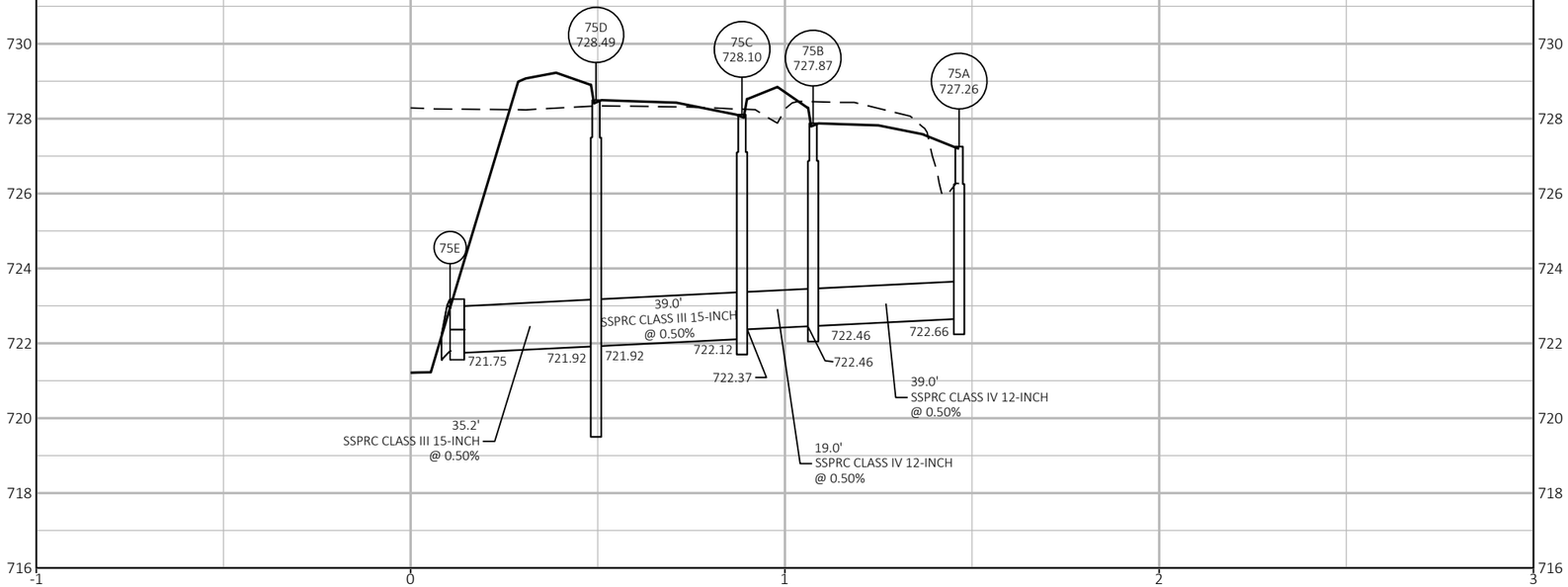

PROJECT NO: RD16-003	HWY: CTH S	COUNTY: KENOSHA	STORM SEWER	SHEET 139	E

FILE NAME : T:\1165811\CIVIL3D\1165811\SHEETSPLAN\022501-SS.DWG
LAYOUT NAME - 5

PLOT DATE : 5/11/2020 1:26 PM PLOT BY : GUILLAMA, TINA PLOT NAME : PLOT SCALE : 1 IN:40 FT

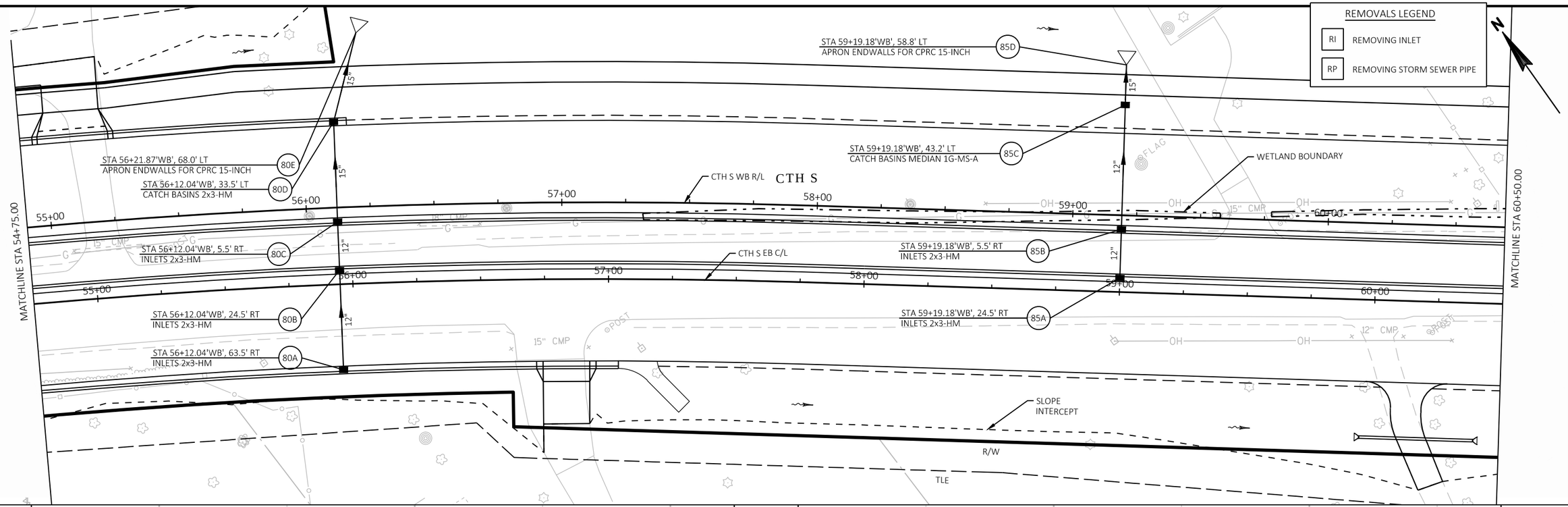

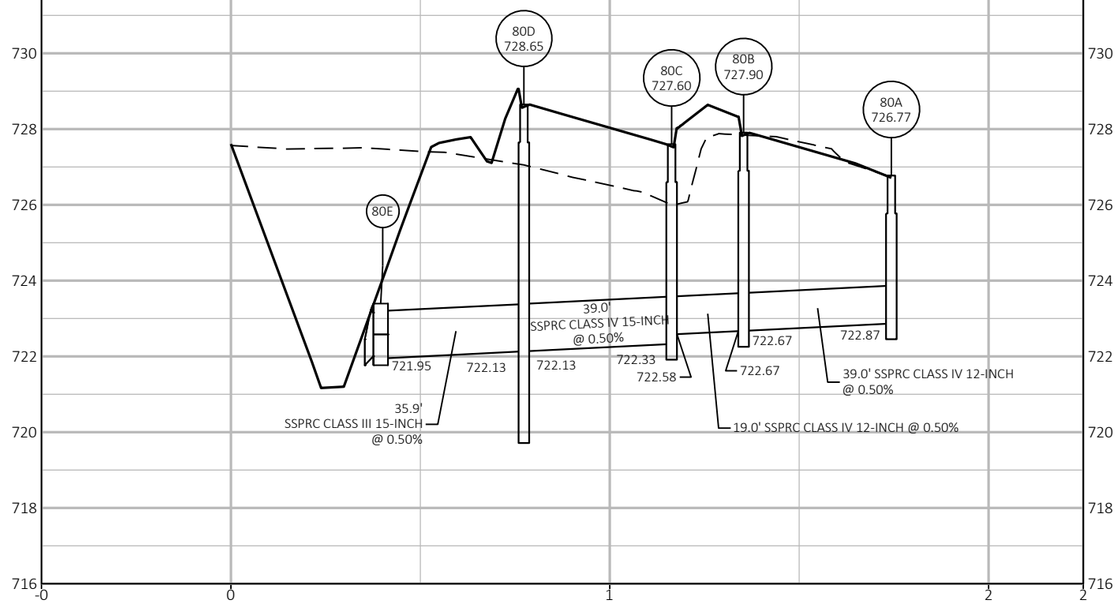

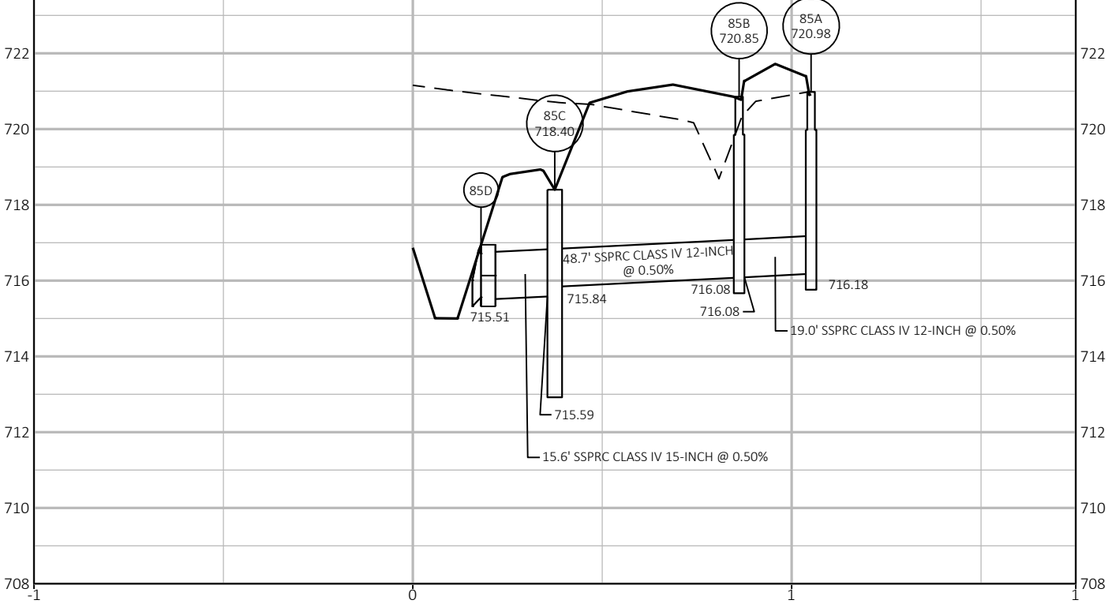

PROJECT NO: RD16-003	HWY: CTH S	COUNTY: KENOSHA	STORM SEWER	SHEET 140	E

FILE NAME : T:\1165811\CIVIL3D\1165811\SHEETSPLAN\022501-SS.DWG
LAYOUT NAME - 6
PLOT DATE : 5/11/2020 1:27 PM
PLOT BY : GUILLAMA, TINA
PLOT NAME :
PLOT SCALE : 1 IN:40 FT
WISDOT/CADDS SHEET 41

2

MATCHLINE STA 60+50.00

MATCHLINE STA 66+25.00

STA 62+19.18'WB', 66.7' LT
APRON ENDWALLS FOR CPRC 15-INCH
95E

STA 62+19.18'WB', 43.1' LT
CATCH BASINS MEDIAN 1G-MS-A
95D

STA 60+81.00'WB', 60.6' LT
APRON ENDWALLS FOR CPRC 12-INCH
90B

STA 60+81.00'WB', 43.1' LT
CATCH BASINS MEDIAN 1G-MS-A
90A

STA 62+50.00'WB', 43.1' LT
INLETS MEDIAN 1G-MS-A
95C

WETLAND BOUNDARY

CTH S WB R/L

STA 62+19.18'WB', 5.5' RT
INLETS 2x3-HM
95B

STA 64+33.83'WB', 24.5' RT
INLETS 2x3-HM
105A

STA 65+53.67'WB', 5.5' RT
MANHOLES 5-HM, FLAT TOP SLAB, 2'X3' OPENING REQ'D
110G

CTH S

CTH S EB C/L

STA 62+19.18'WB', 24.5' RT
INLETS 2x3-HM
95A

STA 64+43.83'WB', 24.5' RT
CATCH BASINS 2x3-HM
105B

STA 65+53.67'WB', 59.9' LT
APRON ENDWALLS FOR CPRCHE 24x38-INCH
110A

STA 65+53.67'WB', 59.7' LT
APRON ENDWALLS FOR CPRCHE 24x38-INCH
110F

STA 65+63.67'WB', 43.1' LT
INLETS MEDIAN 2G-MS-A
110B

STA 65+63.67'WB', 5.5' RT
MANHOLES 5-HM, FLAT TOP SLAB, 2'X3' OPENING REQ'D
110C

STA 65+53.67'WB', 72.7' RT
APRON ENDWALLS FOR CPRCHE 24x38-INCH
110H

STA 65+63.66'WB', 73.1' RT
APRON ENDWALLS FOR CPRCHE 24x38-INCH
110E

STA 64+43.83'WB', 69.6' RT
APRON ENDWALLS FOR CPRC 12-INCH
105C

STA 65+63.67'WB', 22.9' RT
CATCH BASINS 5-HM
110D

TOP OF BERM

SLOPE INTERCEPT

TLE

R/W

REMOVALS LEGEND

RI REMOVING INLET

RP REMOVING STORM SEWER PIPE

61+00 62+00 63+00 64+00 65+00 66+00

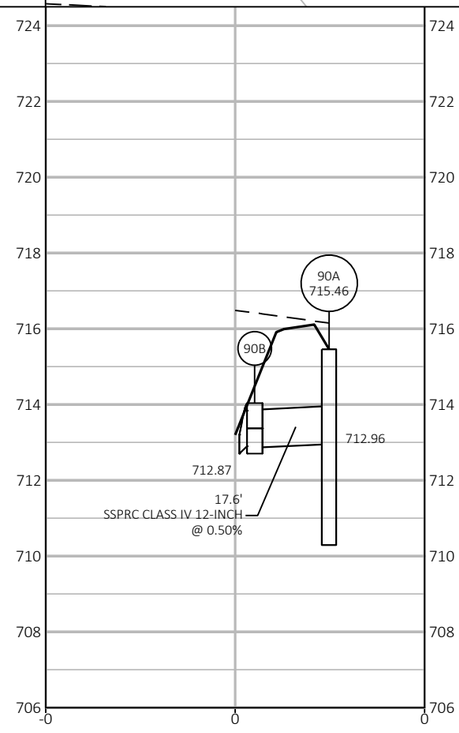

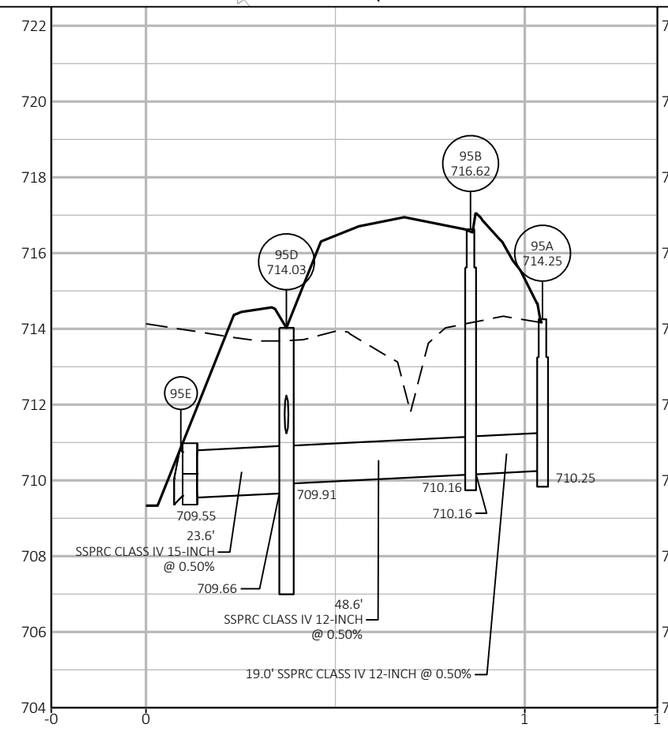

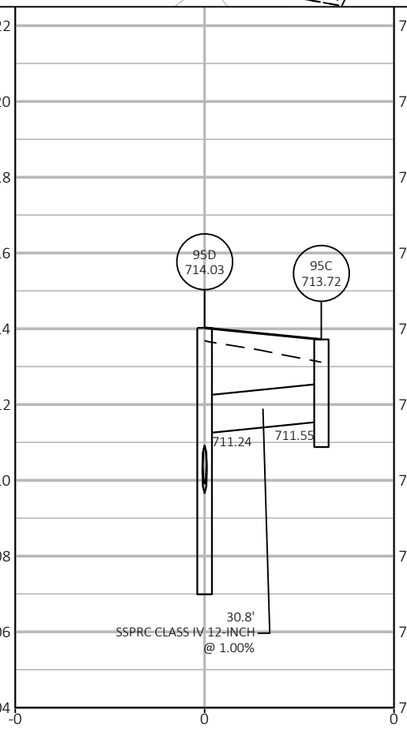

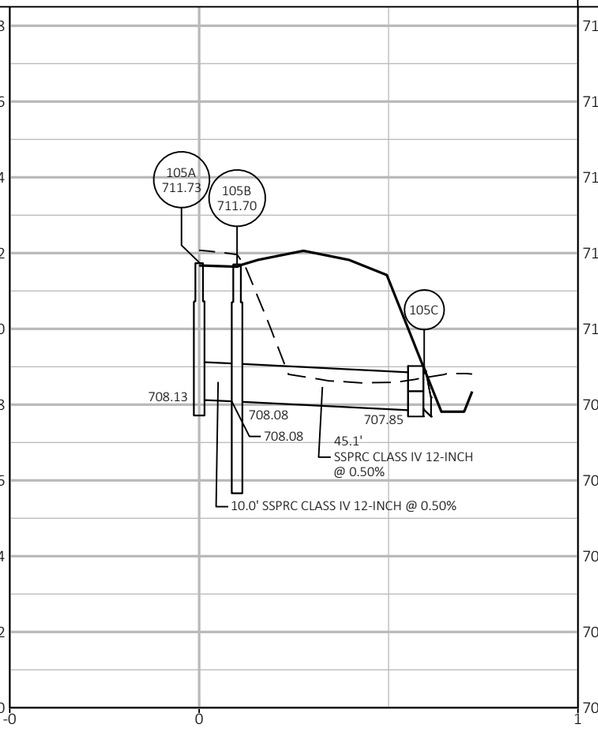

PROJECT NO: RD16-003	HWY: CTH S	COUNTY: KENOSHA	STORM SEWER	SHEET 141	E

FILE NAME : T:\1165811\CIVIL3D\1165811\SHEETSPLAN\022501-SS.DWG
LAYOUT NAME - 7

PLOT DATE : 5/11/2020 1:27 PM PLOT BY : GUILLAMA, TINA PLOT NAME : PLOT SCALE : 1 IN:40 FT

2

STA 62+19.18'WB', 66.7' LT
APRON ENDWALLS FOR CPRC 15-INCH
95E

STA 62+19.18'WB', 43.1' LT
CATCH BASINS MEDIAN 1G-MS-A
95D

STA 60+81.00'WB', 60.6' LT
APRON ENDWALLS FOR CPRC 12-INCH
90B

STA 60+81.00'WB', 43.1' LT
CATCH BASINS MEDIAN 1G-MS-A
90A

STA 62+50.00'WB', 43.1' LT
INLETS MEDIAN 1G-MS-A
95C

STA 62+19.18'WB', 5.5' RT
INLETS 2x3-HM
95B

STA 62+19.18'WB', 24.5' RT
INLETS 2x3-HM
95A

STA 64+33.83'WB', 24.5' RT
INLETS 2x3-HM
105A

STA 64+43.83'WB', 24.5' RT
CATCH BASINS 2x3-HM
105B

STA 64+43.83'WB', 69.6' RT
APRON ENDWALLS FOR CPRC 12-INCH
105C

STA 65+63.67'WB', 59.9' LT
APRON ENDWALLS FOR CPRCHE 24x38-INCH
110A

STA 65+53.67'WB', 59.7' LT
APRON ENDWALLS FOR CPRCHE 24x38-INCH
110F

STA 65+63.67'WB', 43.1' LT
INLETS MEDIAN 2G-MS-A
110B

STA 65+63.67'WB', 5.5' RT
MANHOLES 5-HM, FLAT TOP SLAB, 2'X3' OPENING REQ'D
110C

STA 65+53.67'WB', 5.5' RT
MANHOLES 5-HM, FLAT TOP SLAB, 2'X3' OPENING REQ'D
110G

STA 65+53.67'WB', 72.7' RT
APRON ENDWALLS FOR CPRCHE 24x38-INCH
110H

STA 65+63.66'WB', 73.1' RT
APRON ENDWALLS FOR CPRCHE 24x38-INCH
110E

STA 65+63.62'WB', 22.9' RT
CATCH BASINS 5-HM
110D

MATCHLINE STA 60+50.00

MATCHLINE STA 66+25.00

WETLAND BOUNDARY

CTH S WB R/L

CTH S EB C/L

CTH S

TOP OF BERM

SLOPE INTERCEPT

R/W

TLE

61+00 62+00 63+00 64+00 65+00 66+00

12" 15" 18" CMP 12" CMP 15" CMP 24"X38" OH G POST

REMOVALS LEGEND

RI	REMOVING INLET
RP	REMOVING STORM SEWER PIPE

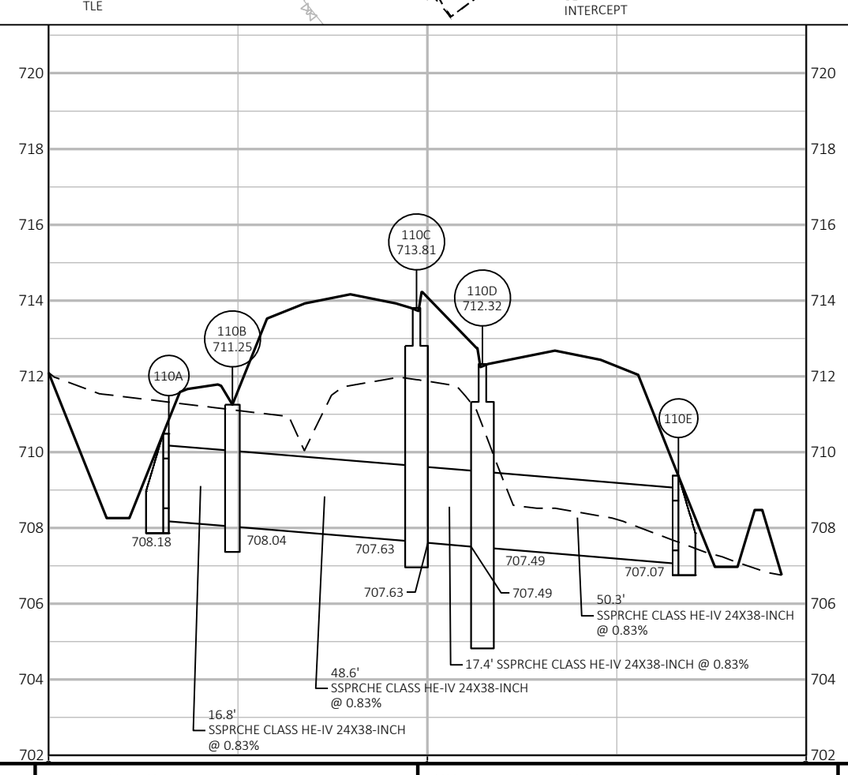

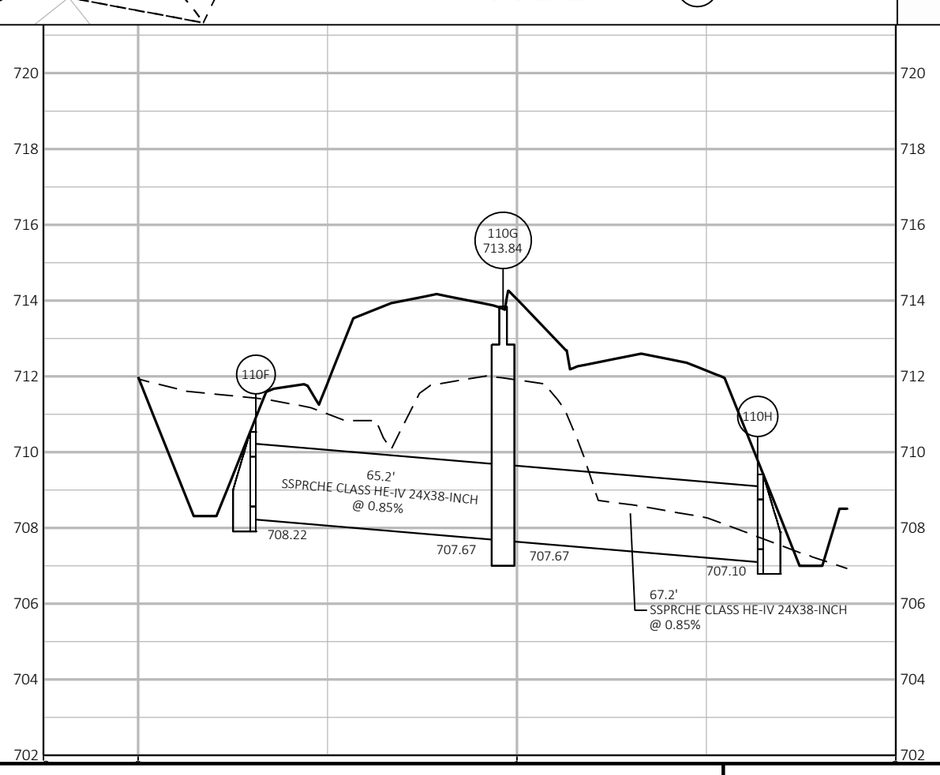

PROJECT NO: RD16-003	HWY: CTH S	COUNTY: KENOSHA	STORM SEWER	SHEET 142	E

FILE NAME : T:\1165811\CIVIL3D\1165811\SHEETSPLAN\022501-SS.DWG
LAYOUT NAME - 7 (B)
PLOT DATE : 5/11/2020 1:28 PM
PLOT BY : GUILLAMA, TINA
PLOT NAME :
PLOT SCALE : 1 IN:40 FT
WISDOT/CADDS SHEET 41

2

7 WB , 43.1' LT

MATCHLINE STA 66+25.00

MATCHLINE STA 72+00.00

102ND AVE

102ND AVE R/L

401+0

125A STA 68+45.36'WB', 59.7' LT
APRON ENDWALLS FOR CPRCHE 24x38-INCH

125B STA 68+98.42'WB', 42.5' LT
INLETS 4-HM

125D STA 68+45.36'WB', 43.2' LT
INLETS MEDIAN 2G-MS-A

125E STA 68+45.36'WB', 5.5' RT
MANHOLES 5-HM, FLAT TOP SLAB, 2'X3' OPENING REQ'D

125F STA 68+67.86'WB', 16.5' RT
INLETS 2x3-HM

125G STA 68+45.36'WB', 16.5' RT
CATCH BASINS 5-HM

125H STA 68+23.36'WB', 77.8' RT
APRON ENDWALLS FOR CPRCHE 24x38-INCH

130A STA 71+50.05'WB', 63.7' LT
APRON ENDWALLS FOR CPRC 24-INCH

130B STA 71+50.00'WB', 33.5' LT
INLETS 2x3-HM

130C STA 71+50.04'WB', 8.4' RT
INLETS 4-HM

130D STA 71+50.00'WB', 24.5' RT
CATCH BASINS 2x3-HM

130E STA 71+49.85'WB', 77.9' RT
APRON ENDWALLS FOR CPRC 24-INCH

CTH S

CTH S WB R/L

CTH S EB C/L

24"X38"

12"

24"

67+00 68+00 69+00 70+00 71+00 72+00

TOP OF BERM

WETLAND BOUNDARY

SLOPE INTERCEPT

R/W

TLE

REMOVALS LEGEND

RI	REMOVING INLET
RP	REMOVING STORM SEWER PIPE

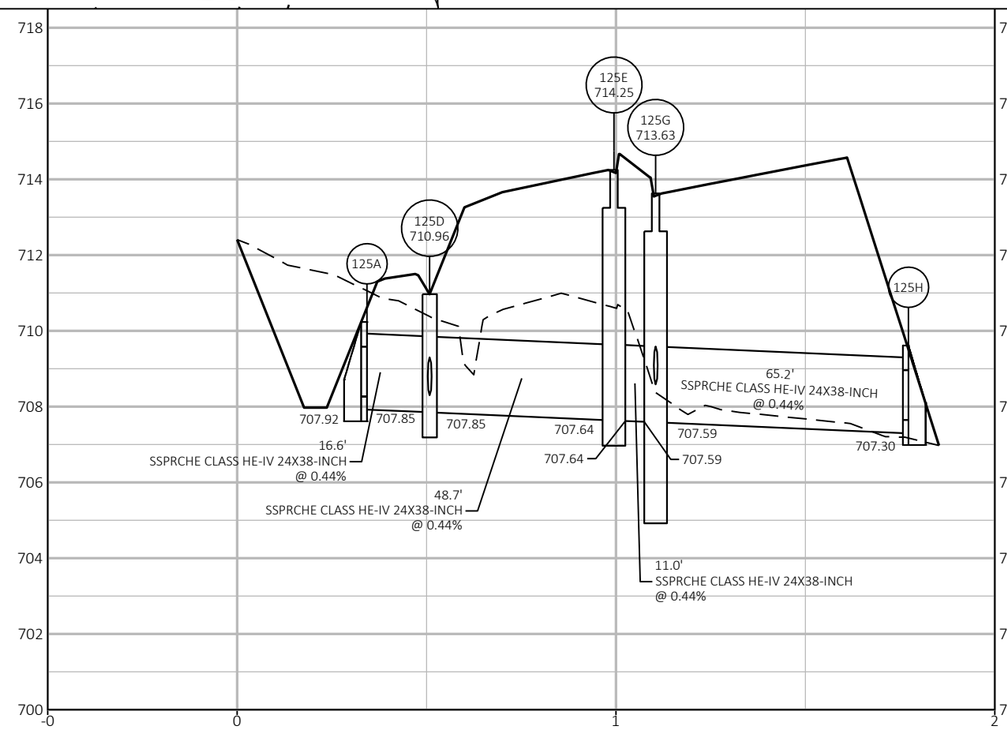

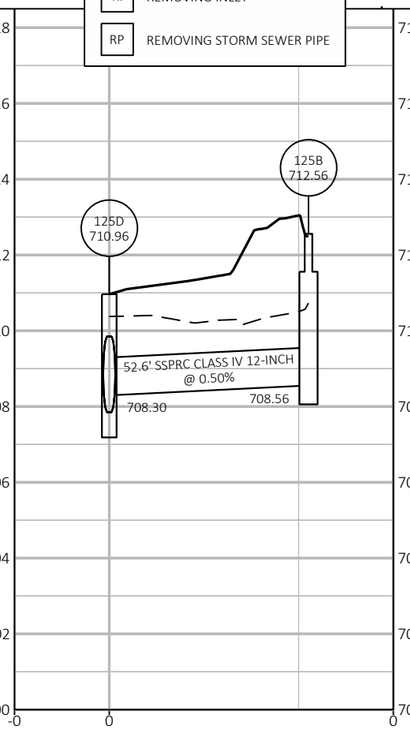

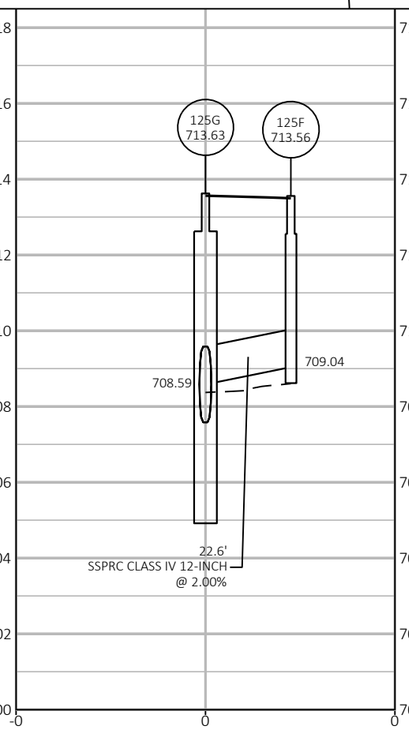

PROJECT NO: RD16-003	HWY: CTH S	COUNTY: KENOSHA	STORM SEWER	SHEET 143 E

FILE NAME : T:\1165811\CIVIL3D\1165811\SHEETSPLAN\022501-SS.DWG
LAYOUT NAME - 8

PLOT DATE : 5/11/2020 1:29 PM PLOT BY : GUILLAMA, TINA PLOT NAME : PLOT SCALE : 1 IN:40 FT

WISDOT/CADDS SHEET 41

2

STA 68+45.36'WB', 59.7' LT
APRON ENDWALLS FOR CPRCHE 24x38-INCH
125A
24"X38"
12"
401
102ND AVE
102ND AVE R/L
STA 71+50.05'WB', 63.7' LT
APRON ENDWALLS FOR CPRC 24-INCH
130A
24"
125B
STA 68+98.42'WB', 42.5' LT
INLETS 4-HM
STA 71+50.00'WB', 33.5' LT
INLETS 2x3-HM
130B
STA 68+45.36'WB', 5.5' RT
MANHOLES 5-HM, FLAT TOP SLAB, 2'X3' OPENING REQ'D
125E
125D
STA 68+45.36'WB', 43.2' LT
INLETS MEDIAN 2G-MS-A
STA 71+50.04'WB', 8.4' RT
INLETS 4-HM
130C
24"
67+00
68+00
69+00
70+00
71+00
72+00
CTH S WB R/L
MATCHLINE STA 66+25.00
MATCHLINE STA 72+00.00
12"
CTH S EB C/L
STA 68+45.36'WB', 16.5' RT
CATCH BASINS 5-HM
125G
STA 68+67.86'WB', 16.5' RT
INLETS 2x3-HM
125F
CTH S
STA 71+50.00'WB', 24.5' RT
CATCH BASINS 2x3-HM
130D
24"X38"
125H
STA 68+23.36'WB', 77.8' RT
APRON ENDWALLS FOR CPRCHE 24x38-INCH
STA 71+49.85'WB', 77.9' RT
APRON ENDWALLS FOR CPRC 24-INCH
130E
SLOPE
INTERCEPT
TOP OF BERM
WETLAND
BOUNDARY
R/W
TLE

REMOVALS LEGEND
RI REMOVING INLET
RP REMOVING STORM SEWER PIPE

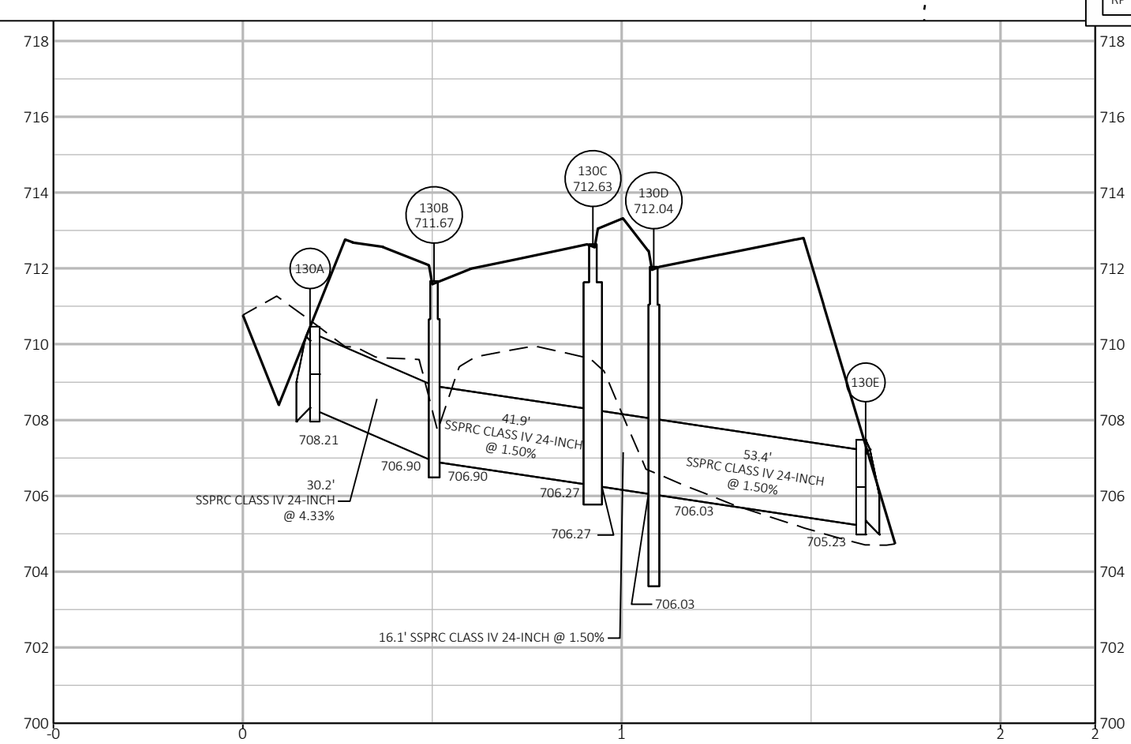

PROJECT NO: RD16-003	HWY: CTH S	COUNTY: KENOSHA	STORM SEWER	SHEET 144	E

FILE NAME : T:\1165811\CIVIL3D\1165811\SHEETSPLAN\022501-SS.DWG
LAYOUT NAME - 8 (B)
PLOT DATE : 5/11/2020 1:30 PM
PLOT BY : GUILLAMA, TINA
PLOT NAME :
PLOT SCALE : 1 IN:40 FT

2

MATCHLINE STA 72+00.00

MATCHLINE STA 77+75.00

100TH AVE

100TH AVE R/L

CTH S

CTH S WB R/L

CTH S EB C/L

STA 74+75.00'WB', 58.1' LT
APRON ENDWALLS FOR CPRC 21-INCH
135A

STA 74+75.00'WB', 43.1' LT
INLETS MEDIAN 2G-MS-A
135B

STA 74+75.00'WB', 5.5' RT
INLETS 2x3-HM
135C

STA 74+75.00'WB', 16.7' RT
CATCH BASINS 4-HM
135D

STA 74+75.00'WB', 71.6' RT
APRON ENDWALLS FOR CPRC 24-INCH
135E

STA 73+16.02'WB', 24.5' RT
CATCH BASINS 2x3-HM
132A

STA 73+16.02'WB', 73.3' RT
APRON ENDWALLS FOR CPRC 12-INCH
132B

STA 75+37.00'WB', 56.8' LT
APRON ENDWALLS FOR CPRC 12-INCH
140B

STA 75+37.00'WB', 43.1' LT
CATCH BASINS MEDIAN 1G-MS-A
140A

STA 76+90.04'WB', 61.6' LT
APRON ENDWALLS FOR CPRC 12-INCH
145E

STA 76+90.04'WB', 42.8' LT
CATCH BASINS MEDIAN 1G-MS-A
145D

STA 76+90.04'WB', 5.5' RT
INLETS 2x3-HM
145C

STA 77+15.80'WB', 15.2' RT
INLETS 2x3-HM
145A

STA 76+90.04'WB', 16.5' RT
INLETS 2x3-HM
145B

WETLAND BOUNDARY

SLOPE INTERCEPT

R/W

TLE

REMOVALS LEGEND

RI	REMOVING INLET
RP	REMOVING STORM SEWER PIPE

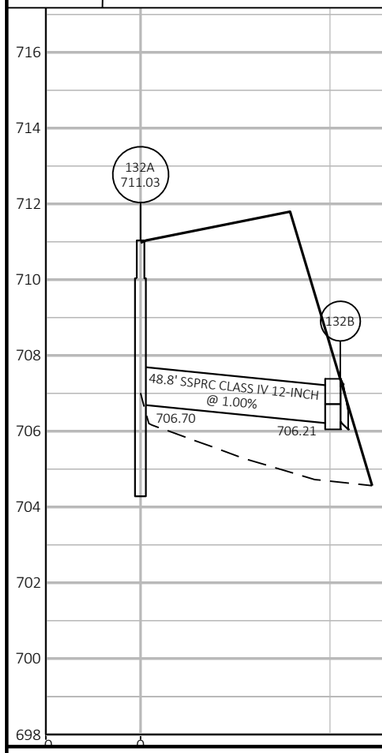

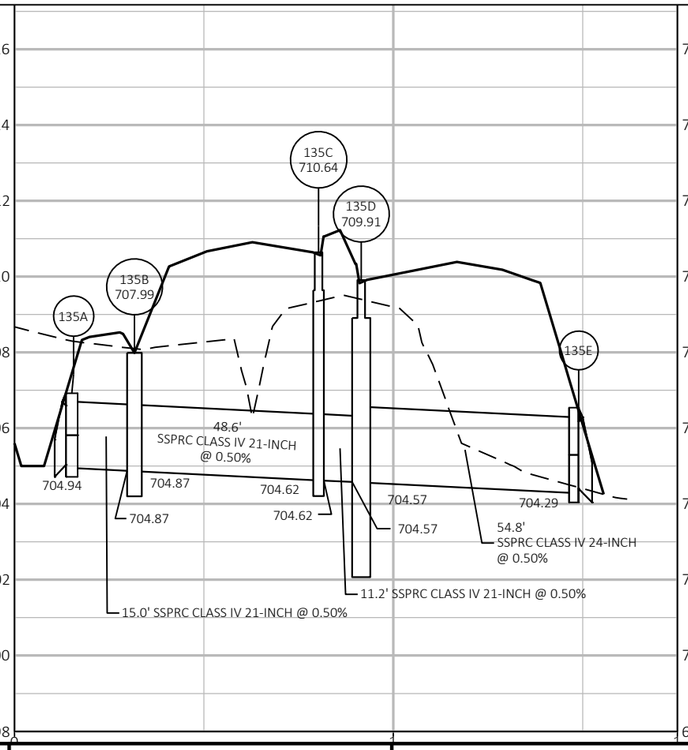

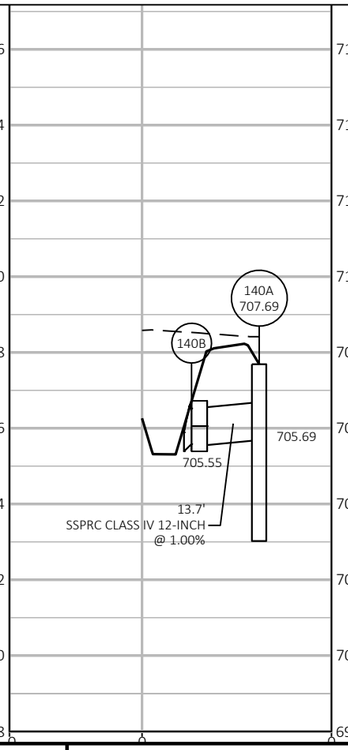

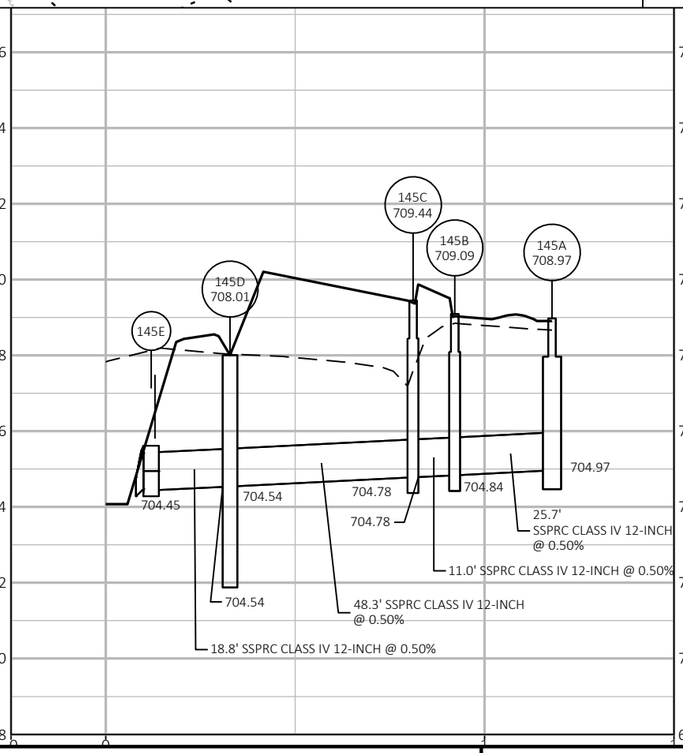

PROJECT NO: RD16-003	HWY: CTH S	COUNTY: KENOSHA	STORM SEWER	SHEET 145	E

FILE NAME : T:\1165811\CIVIL3D\1165811\SHEETSPLAN\022501-SS.DWG
LAYOUT NAME - 9

PLOT DATE : 5/11/2020 1:31 PM

PLOT BY : GUILLAMA, TINA

PLOT NAME :

PLOT SCALE : 1 IN:40 FT

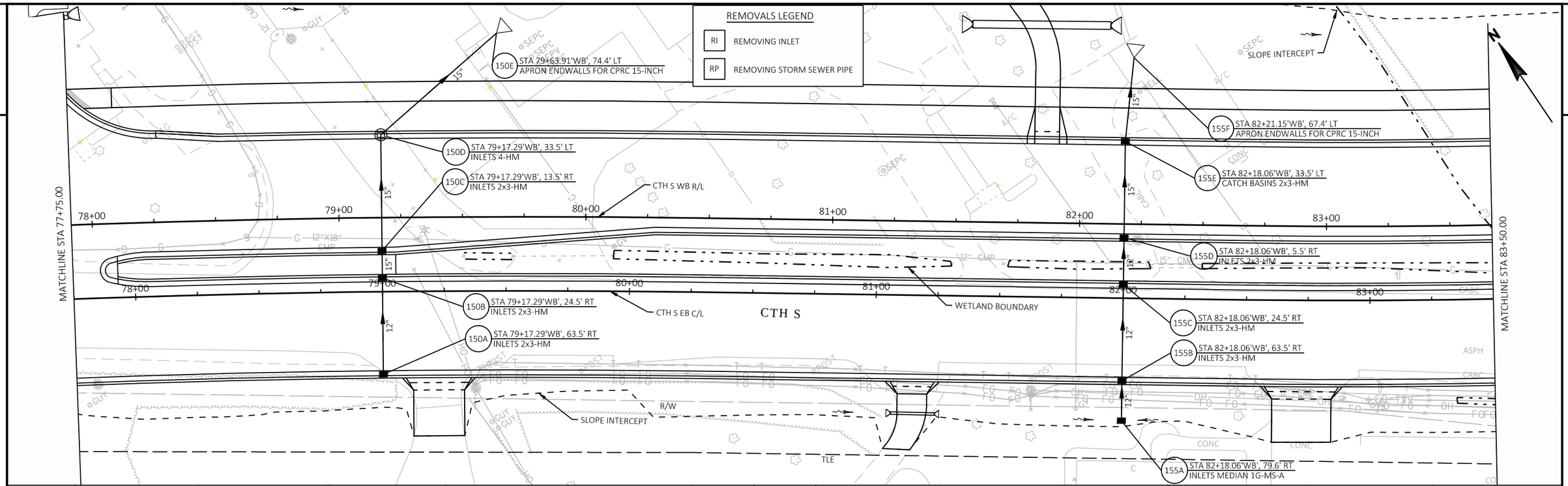

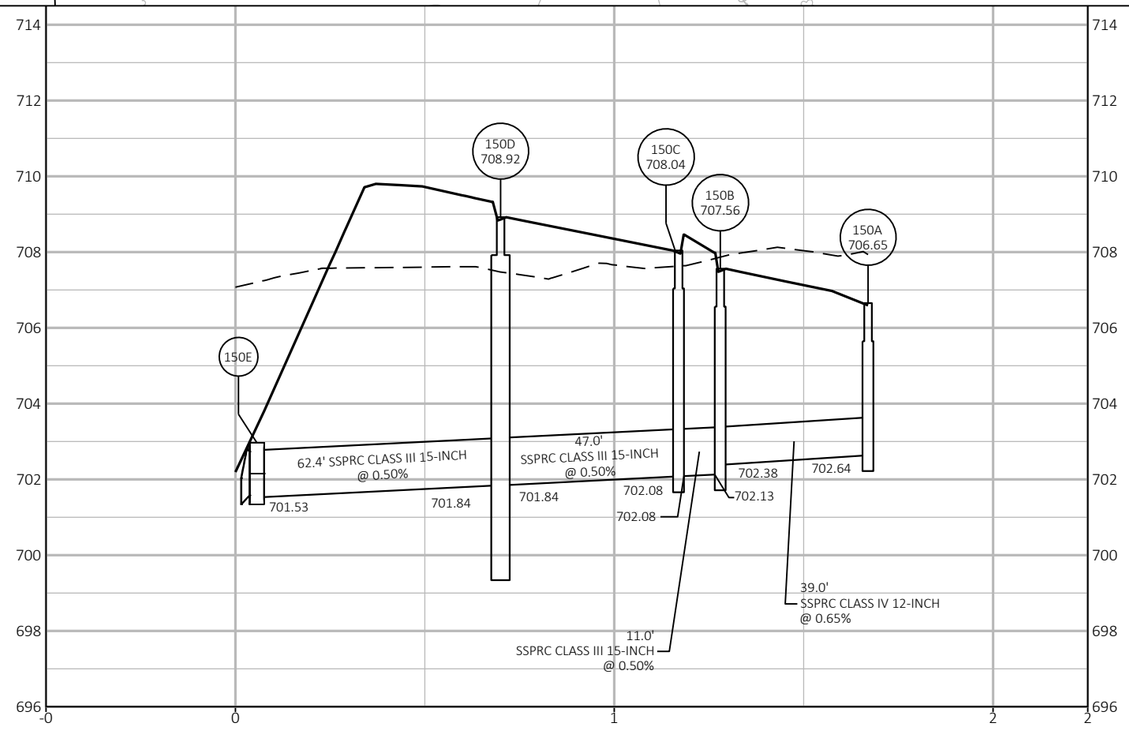

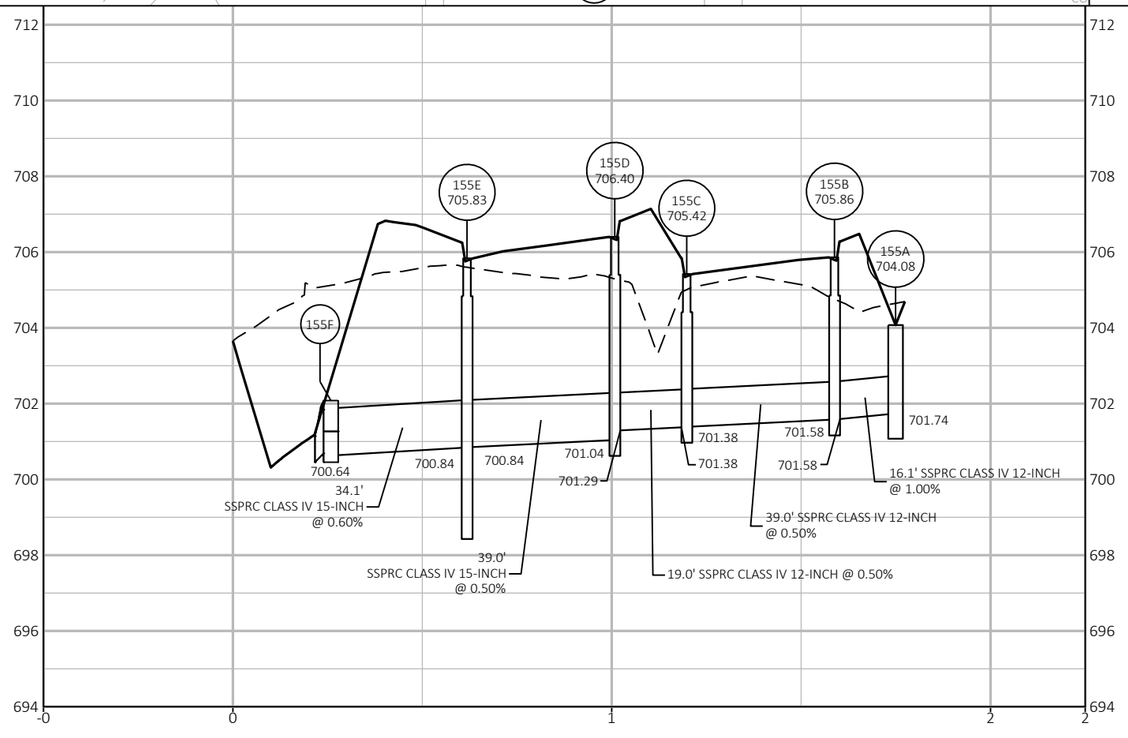

PROJECT NO: RD16-003	HWY: CTH S	COUNTY: KENOSHA	STORM SEWER	SHEET 146	E

FILE NAME : T:\1165811\CIVIL3D\1165811\SHEETSPLAN\022501-SS.DWG
LAYOUT NAME - 10
PLOT DATE : 5/11/2020 1:31 PM
PLOT BY : GUILLAMA, TINA
PLOT NAME :
PLOT SCALE : 1 IN:40 FT
WISDOT/CADDS SHEET 41

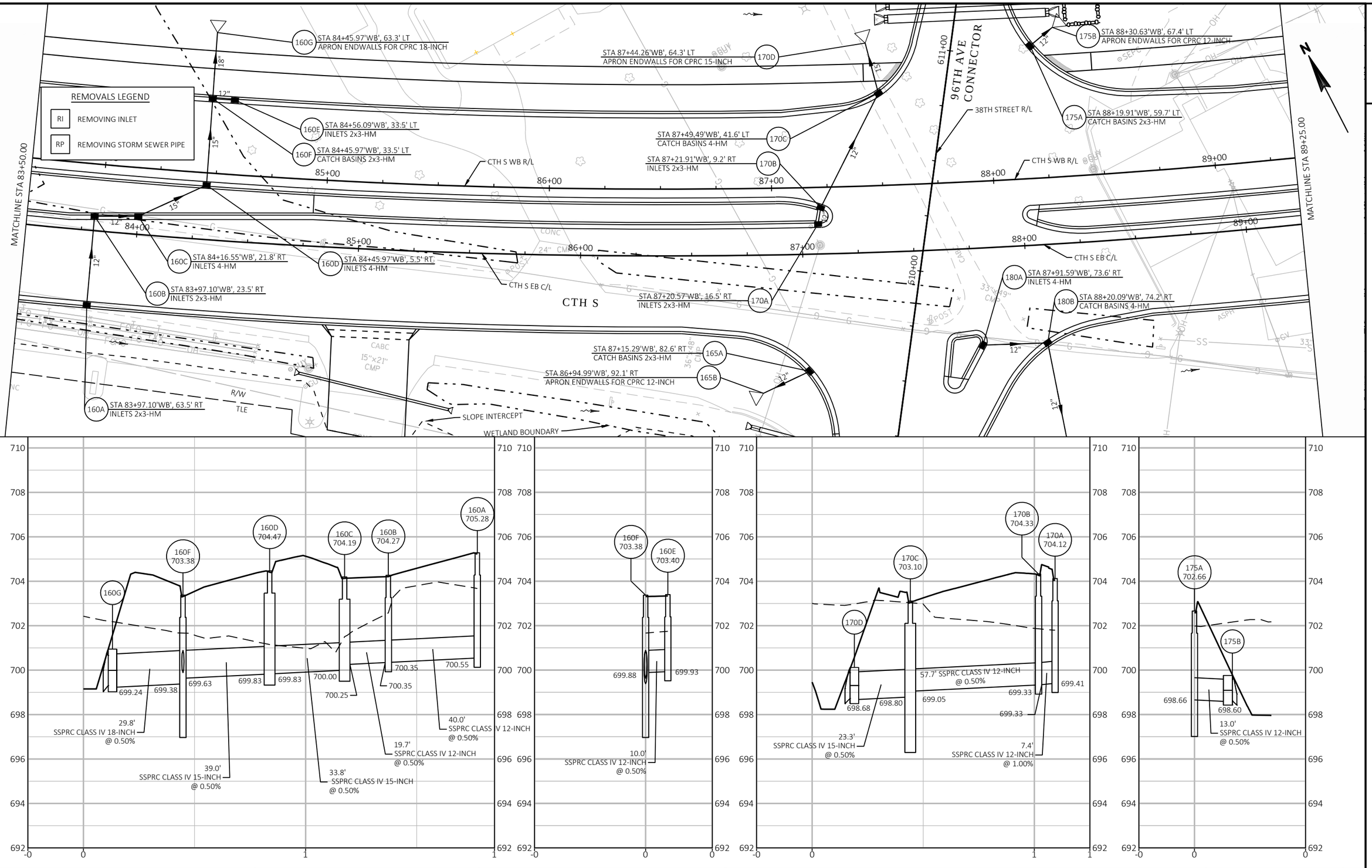

PROJECT NO: RD16-003	HWY: CTH S	COUNTY: KENOSHA	STORM SEWER	SHEET 147	E

FILE NAME : T:\1165811\CIVIL3D\1165811\SHEETSPLAN\022501-SS.DWG
LAYOUT NAME - 11

PLOT DATE : 5/11/2020 1:32 PM PLOT BY : GUILLAMA, TINA PLOT NAME : PLOT SCALE : 1 IN:40 FT

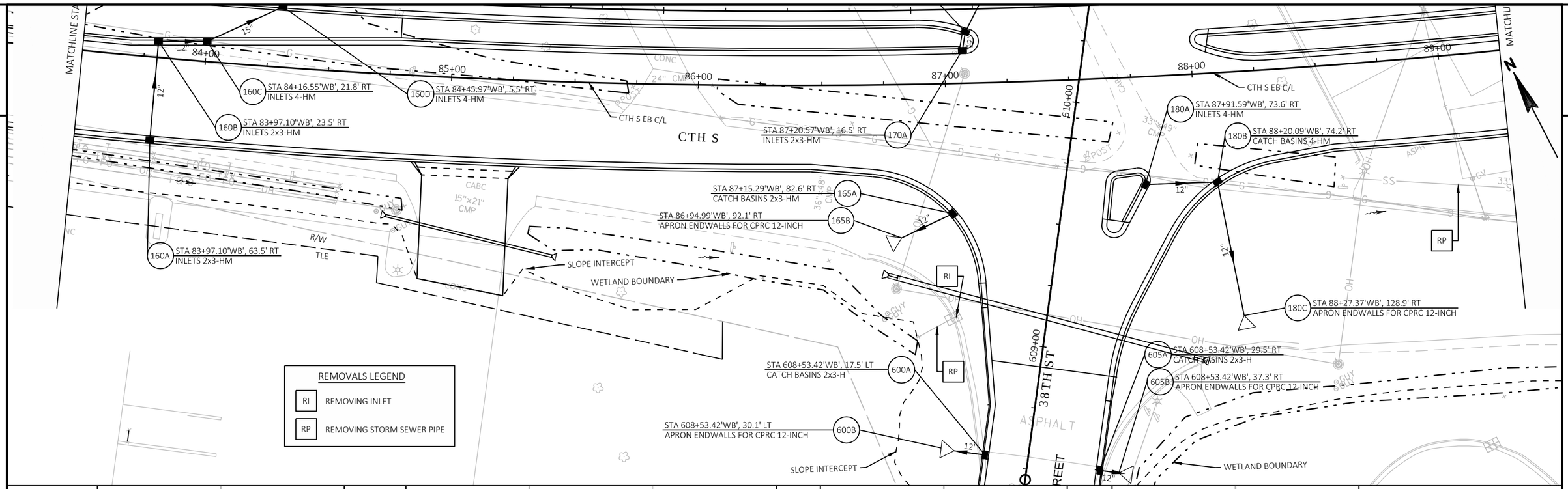

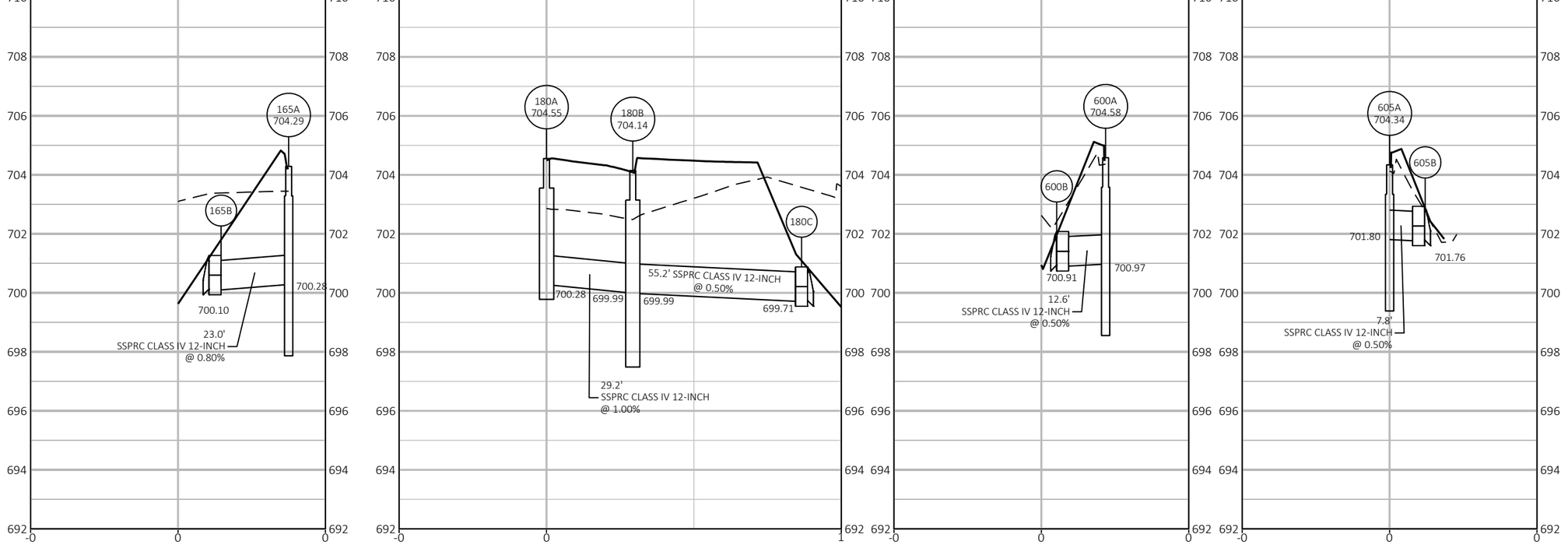

PROJECT NO: RD16-003	HWY: CTH S	COUNTY: KENOSHA	STORM SEWER	SHEET 148	E

FILE NAME : T:\1165811\CIVIL3D\1165811\SHEETSPLAN\022501-SS.DWG
LAYOUT NAME - 11 (B)
PLOT DATE : 5/11/2020 1:33 PM
PLOT BY : GUILLAMA, TINA
PLOT NAME :
PLOT SCALE : 1 IN:40 FT

2

2

MATCHLINE STA 89+25.00

MATCHLINE STA 95+00.00

CTH S

CTH S WB R/L

CTH S EB C/L

WETLAND BOUNDARY

SLOPE INTERCEPT

TLE

RNN

43"X68"

190 STA 90+19.86'WB', 42.5' LT
MANHOLES 8-L

190B STA 90+19.86'WB', 33.5' LT
CATCH BASINS 2x3-HM

190A STA 90+00.00'WB', 33.5' LT
INLETS 2x3-HM

190C STA 89+93.96'WB', 61.1' LT
APRON ENDWALLS FOR CPRCHE 43x68-INCH

190D STA 91+88.07'WB', 71.7' LT
APRON ENDWALLS FOR CPRCHE 43x68-INCH

185A STA 90+00.00'WB', 13.5' RT
INLETS 4-HM

185B STA 89+70.75'WB', 24.5' RT
INLETS 4-HM

185C STA 89+60.84'WB', 24.5' RT
CATCH BASINS 2x3-HM

185D STA 90+35.53'WB', 127.1' RT
APRON ENDWALLS FOR CPRC 15-INCH

195D STA 93+07.23'WB', 57.4' LT
APRON ENDWALLS FOR CPRC 12-INCH

195C STA 93+07.23'WB', 43.7' LT
CATCH BASINS MEDIAN 1G-MS

195B STA 93+07.23'WB', 5.5' RT
INLETS 2x3-HM

195A STA 93+07.23'WB', 24.5' RT
INLETS 2x3-HM

90+00 91+00 92+00 93+00 94+00 95+00

12" 15" 43"X68" 33"X49" CMP 36" CMP

REMOVALS LEGEND

RI REMOVING INLET

RP REMOVING STORM SEWER PIPE

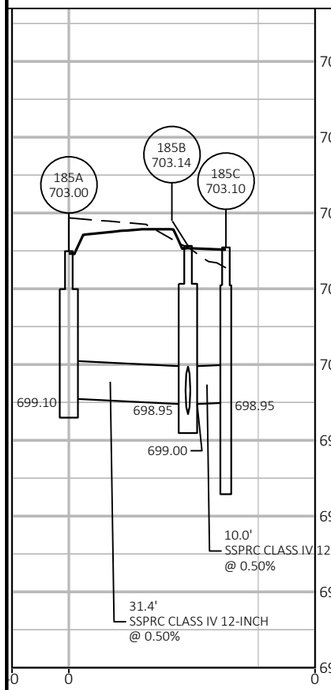

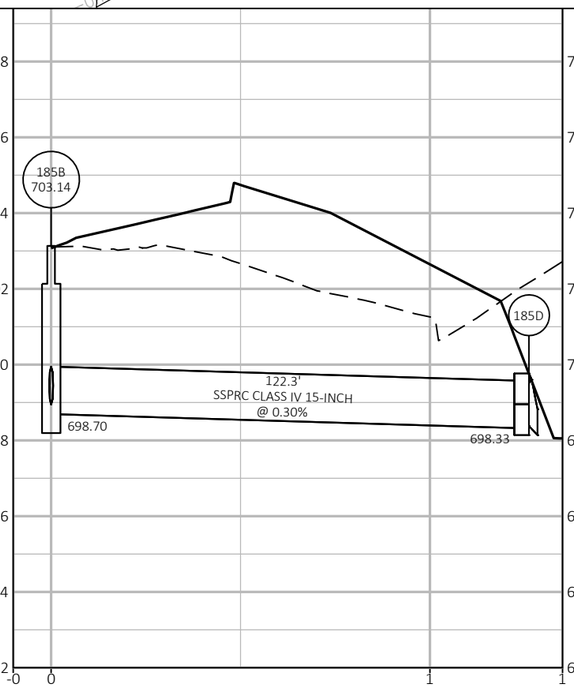

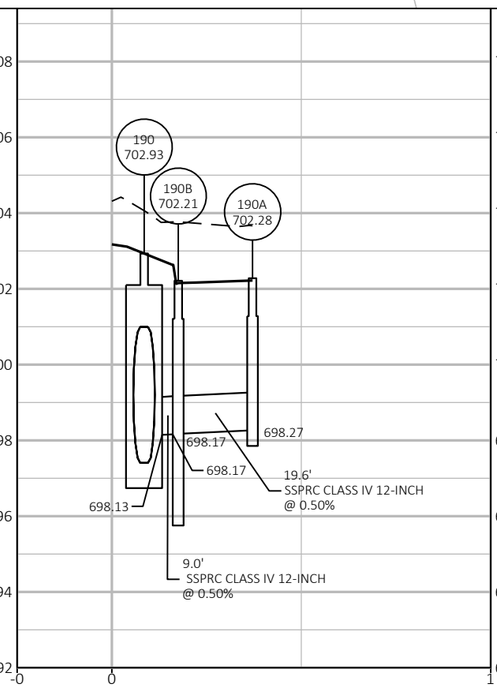

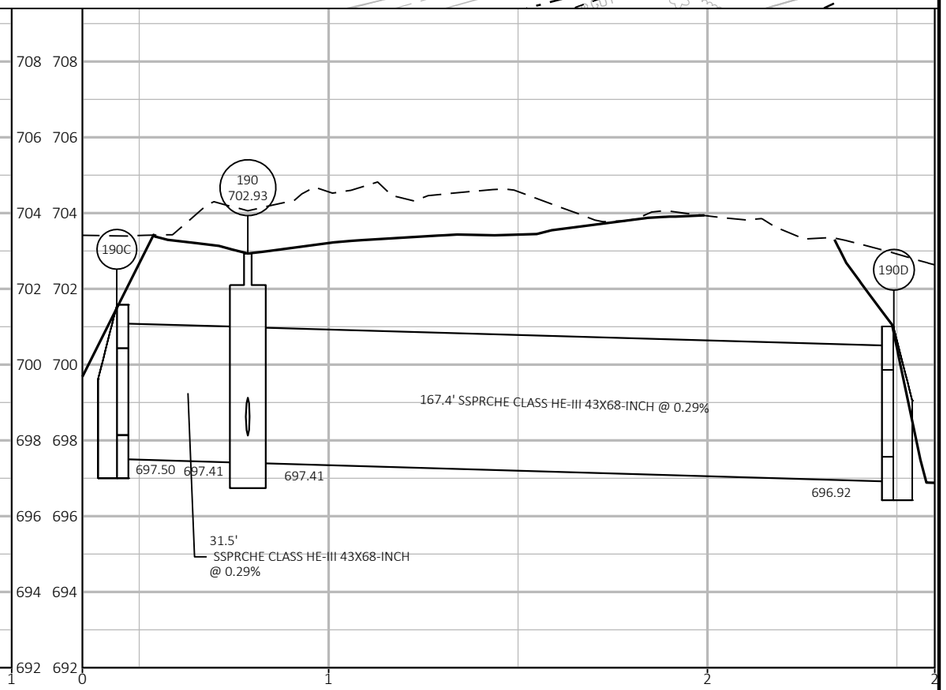

PROJECT NO: RD16-003	HWY: CTH S	COUNTY: KENOSHA	STORM SEWER	SHEET 149	E

FILE NAME : T:\1165811\CIVIL3D\1165811\SHEETSPLAN\022501-SS.DWG
LAYOUT NAME - 12

PLOT DATE : 5/11/2020 1:34 PM PLOT BY : GUILLAMA, TINA PLOT NAME : PLOT SCALE : 1 IN:40 FT

WISDOT/CADDS SHEET 41

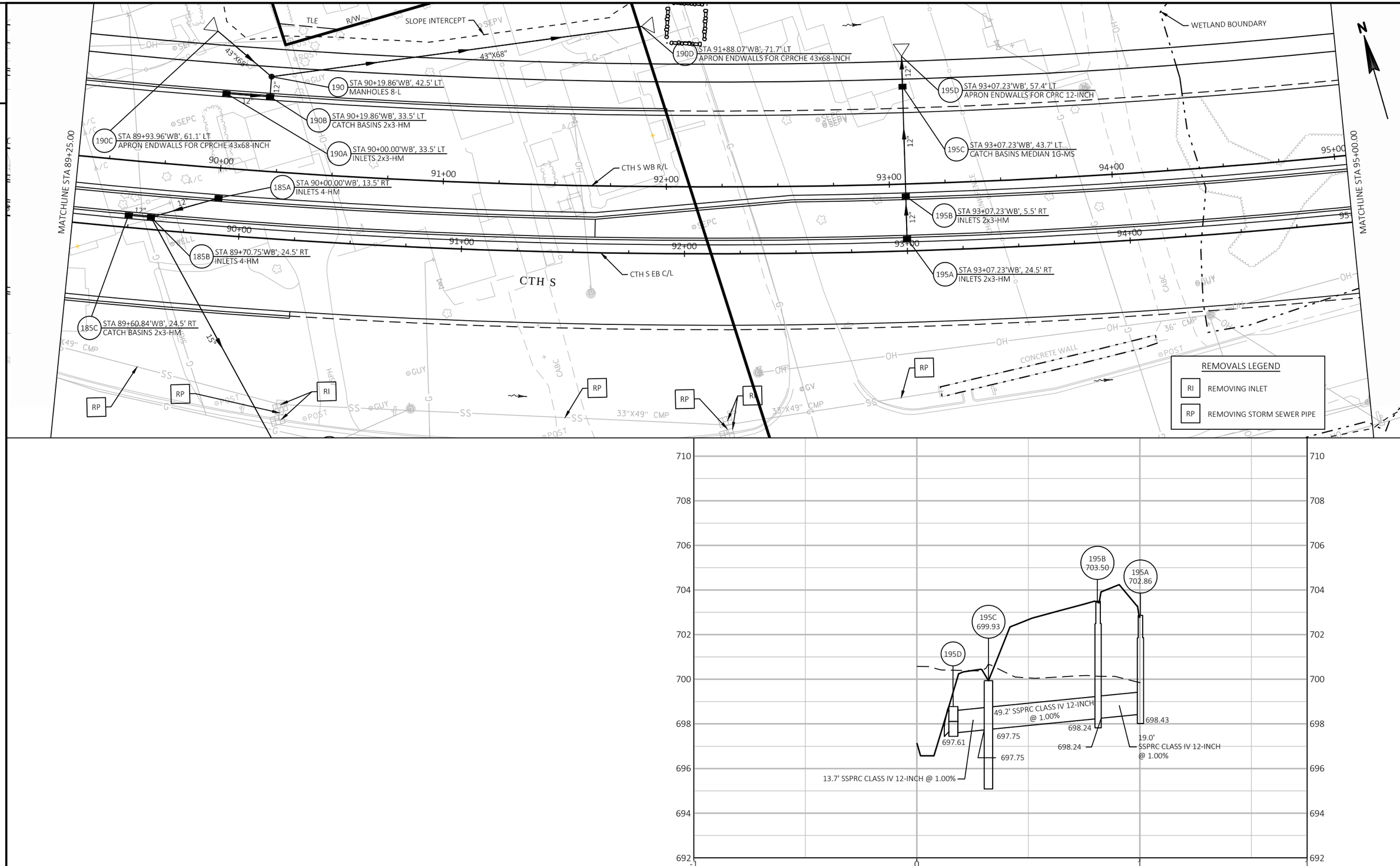

PROJECT NO: RD16-003	HWY: CTH S	COUNTY: KENOSHA	STORM SEWER	SHEET 150	E

FILE NAME : T:\1165811\CIVIL3D\1165811\SHEETSPLAN\022501-SS.DWG
LAYOUT NAME - 12 (B)
PLOT DATE : 5/11/2020 1:34 PM
PLOT BY : GUILLAMA, TINA
PLOT NAME :
PLOT SCALE : 1 IN:40 FT
WISDOT/CADDS SHEET 41

2

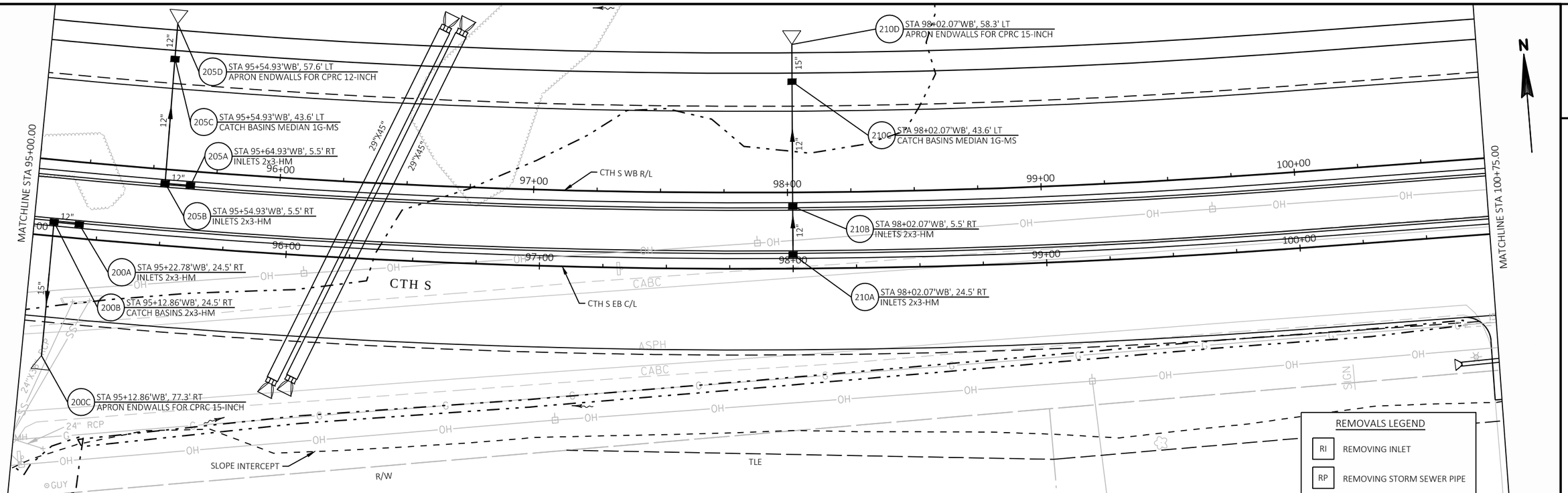

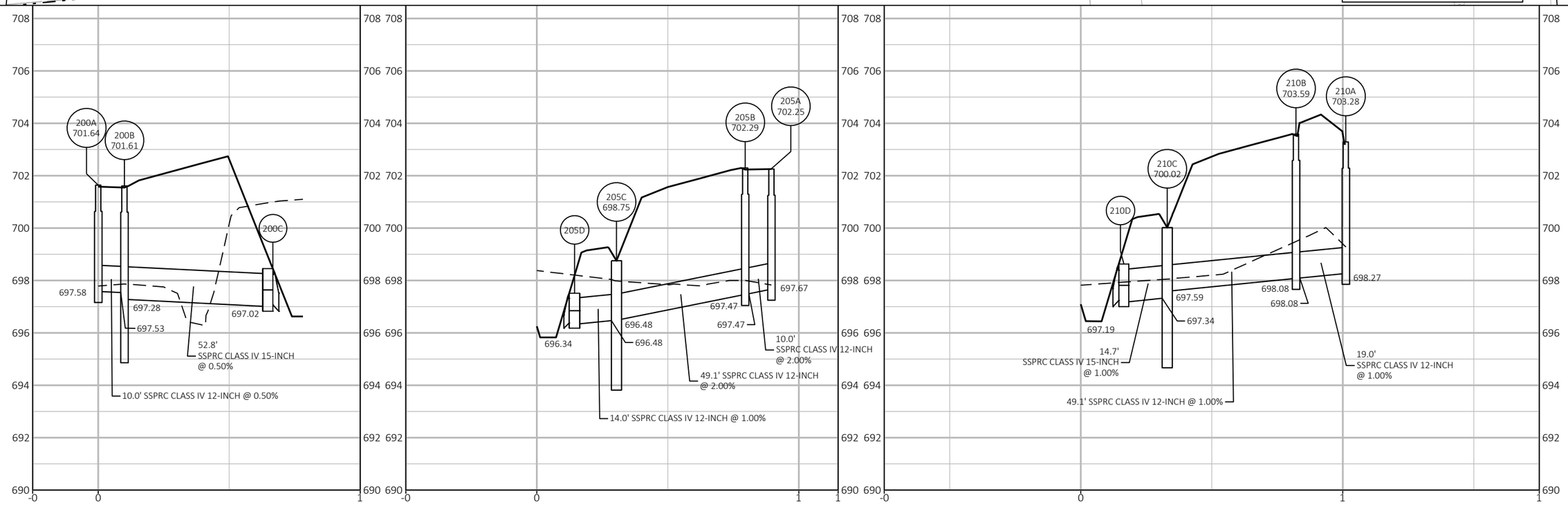

PROJECT NO: RD16-003	HWY: CTH S	COUNTY: KENOSHA	STORM SEWER	SHEET 151	E

2

N

MATCHLINE STA 100+75.00

MATCHLINE STA 106+50.00

215D STA 101+00.06'WB', 58.6' LT
APRON ENDWALLS FOR CPRC 15-INCH

215C STA 101+00.06'WB', 43.1' LT
CATCH BASINS MEDIAN 1G-MS

215B STA 101+00.06'WB', 5.5' RT
INLETS 2x3-HM

215A STA 101+00.06'WB', 24.5' RT
INLETS 2x3-HM

220E STA 104+00.06'WB', 61.0' LT
APRON ENDWALLS FOR CPRC 15-INCH

220D STA 104+00.06'WB', 43.1' LT
CATCH BASINS MEDIAN 1G-MS

220C STA 104+00.06'WB', 5.5' RT
INLETS 2x3-HM

220B STA 104+00.06'WB', 24.5' RT
INLETS 2x3-HM

220A STA 104+00.06'WB', 63.5' RT
INLETS 2x3-HM

STA 105+87.63'WB', 60.8' LT
APRON ENDWALLS FOR CPRC 12-INCH

221B

STA 105+87.50'WB', 43.1' LT
CATCH BASINS MEDIAN 1G-MS-A

221A

CTH S

WETLAND BOUNDARY

CTH S WB R/L

CTH S EB C/L

R/W

SLOPE INTERCEPT

TLE

101+00 102+00 103+00 104+00 105+00 106+00

REMOVALS LEGEND

RI	REMOVING INLET
RP	REMOVING STORM SEWER PIPE

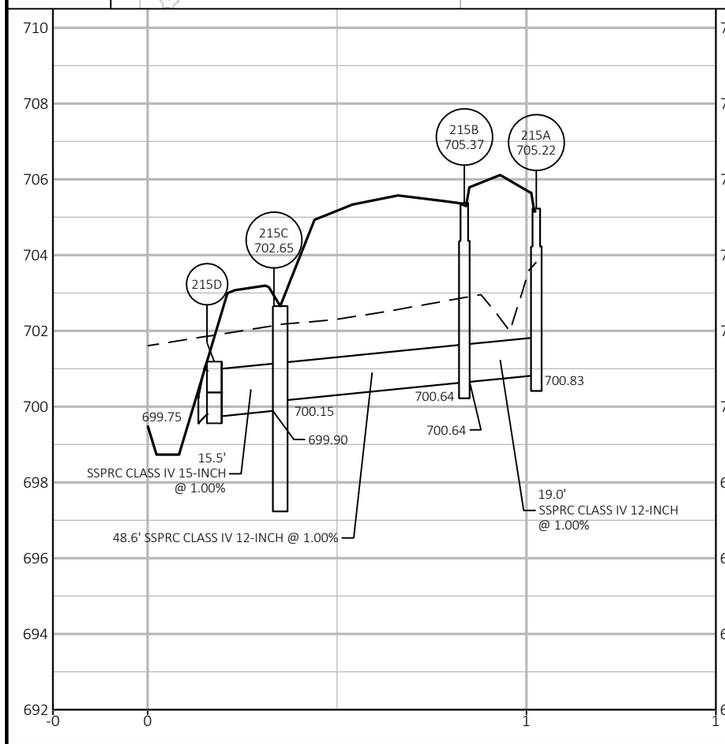

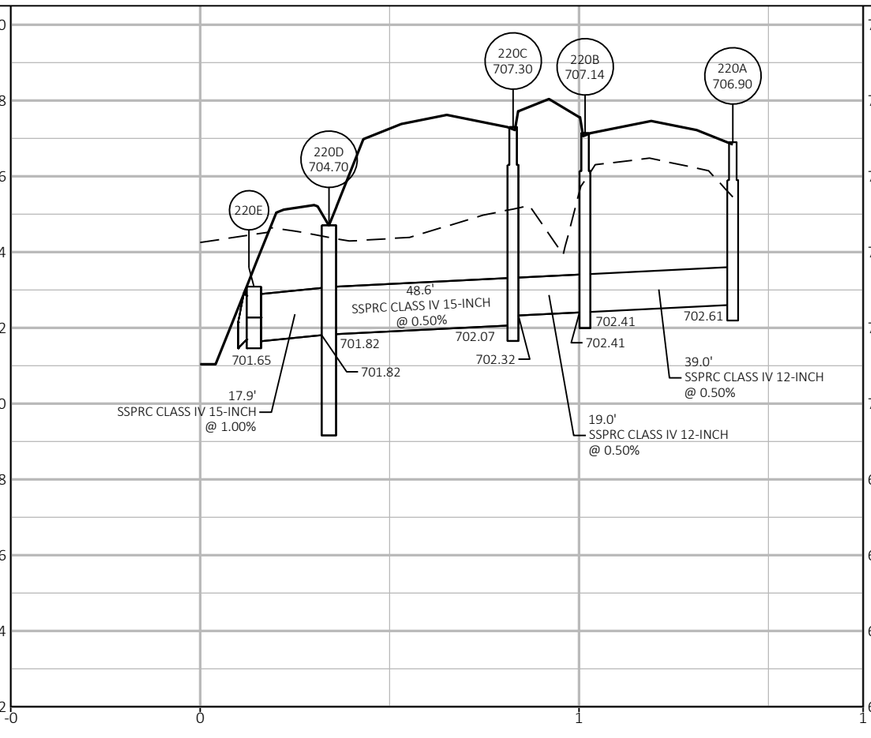

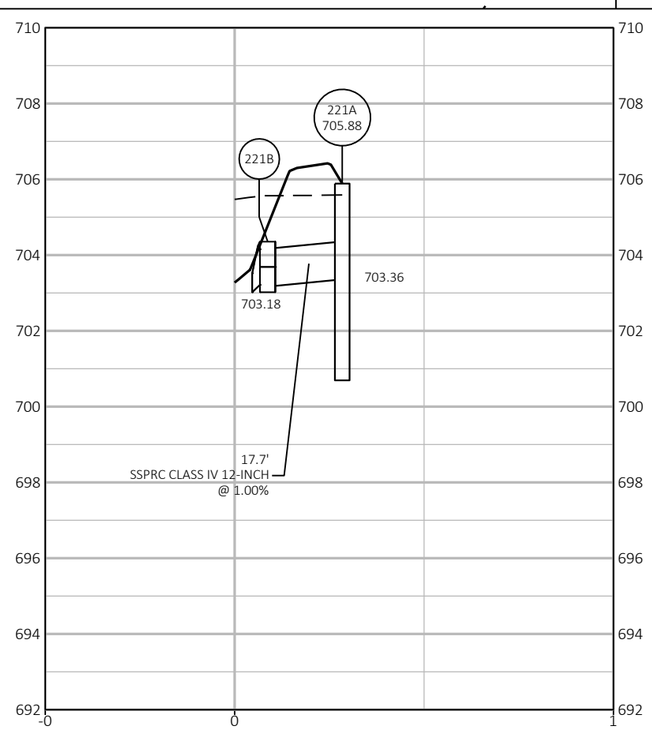

PROJECT NO: RD16-003	HWY: CTH S	COUNTY: KENOSHA	STORM SEWER	SHEET 152	E

FILE NAME : T:\1165811\CIVIL3D\1165811\SHEETSPLAN\022501-SS.DWG
LAYOUT NAME - 14

PLOT DATE : 5/11/2020 1:36 PM PLOT BY : GUILLAMA, TINA PLOT NAME : PLOT SCALE : 1 IN:40 FT

WISDOT/CADDS SHEET 41

2

MATCHLINE STA 106+50.00

MATCHLINE STA 112+25.00

107+00 108+00 109+00 110+00 111+00 112+00

CTH S WB R/L

CTH S

CTH S EB C/L

15"

15"

12"

12"

225E STA 110+00.06'WB', 61.1' LT
APRON ENDWALLS FOR CPRC 15-INCH

225D STA 110+00.06'WB', 43.1' LT
CATCH BASINS MEDIAN 1G-MS

225C STA 110+00.06'WB', 5.5' RT
INLETS 2x3-HM

225B STA 110+00.06'WB', 24.5' RT
INLETS 2x3-HM

225A STA 110+00.06'WB', 63.5' RT
INLETS 2x3-HM

ENCE

TABL

ASPH

CABC

SPOST

WETLAND BOUNDARY

SLOPE INTERCEPT

OH

R/W

E

TLE

ASPH

REMOVALS LEGEND

RI REMOVING INLET

RP REMOVING STORM SEWER PIPE

N

2

710 708 706 704 702 700 698 696 694 692

-1 0 1 1

225C 707.46

225B 707.27

225A 707.03

225D 704.86

225E

48.6'
SSPRC CLASS IV 15-INCH
@ 0.50%

701.95

701.77

701.95

18.0' SSPRC CLASS IV 15-INCH @ 1.00%

702.19

702.44

702.54

702.54

702.73

39.0'
SSPRC CLASS IV 12-INCH
@ 0.50%

19.0'
SSPRC CLASS IV 12-INCH
@ 0.50%

PROJECT NO: RD16-003	HWY: CTH S	COUNTY: KENOSHA	STORM SEWER	SHEET 153	E

FILE NAME : T:\1165811\CIVIL3D\1165811\SHEETSPLAN\022501-SS.DWG
LAYOUT NAME - 15

PLOT DATE : 5/11/2020 1:37 PM PLOT BY : GUILLAMA, TINA PLOT NAME : PLOT SCALE : 1 IN:40 FT

2

N

MATCHLINE STA 112+25.00

MATCHLINE STA 118+00.00

CTH S

CTH S WB R/L

CTH S EB C/L

15"

15"

12"

12"

230E STA 112+95.06'WB', 57.7' LT
APRON ENDWALLS FOR CPRC 15-INCH

230D STA 112+95.06'WB', 43.1' LT
CATCH BASINS MEDIAN 1G-MS

230C STA 112+95.06'WB', 5.5' RT
INLETS 2x3-HM

230B STA 112+95.06'WB', 24.5' RT
INLETS 2x3-HM

230A ???
INLETS 2x3-HM

113+00 114+00 115+00 116+00 117+00 118

CABC

ASPH

TLE

SLOPE INTERCEPT

R/W

CHAIN LINK FENCE

REMOVALS LEGEND

RI	REMOVING INLET
RP	REMOVING STORM SEWER PIPE

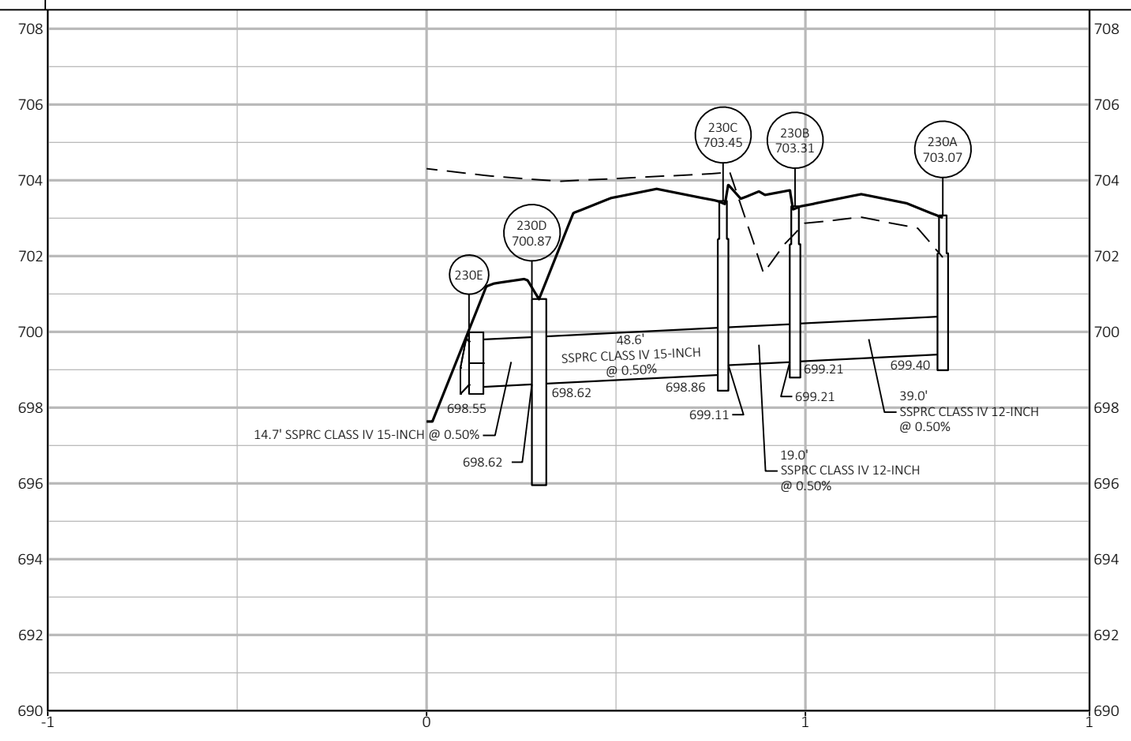

PROJECT NO: RD16-003	HWY: CTH S	COUNTY: KENOSHA	STORM SEWER	SHEET 154	E

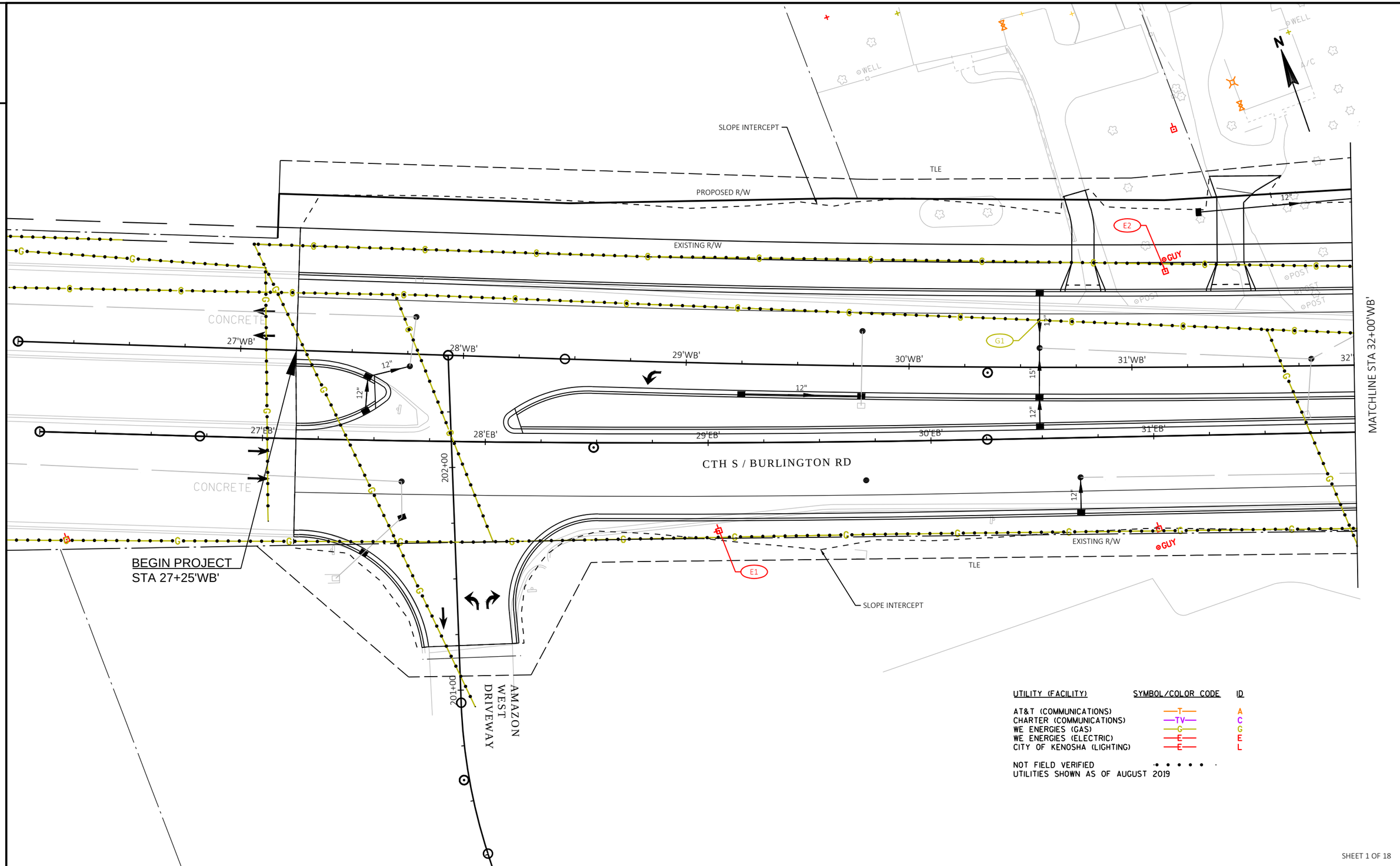

SHEET 1 OF 18

PROJECT NO: RD16-003	HWY: CTH S	COUNTY: KENOSHA	UTILITY DETAILS	SHEET 155	E

FILE NAME : T:\1165811\CIVIL3D\1165811\SHEETSPLAN\023001-UP.DWG
LAYOUT NAME - 1
PLOT DATE : 5/11/2020 1:46 PM
PLOT BY : GUILLAMA, TINA
PLOT NAME :
PLOT SCALE : 1 IN:40 FT
WISDOT/CADDS SHEET 42

2

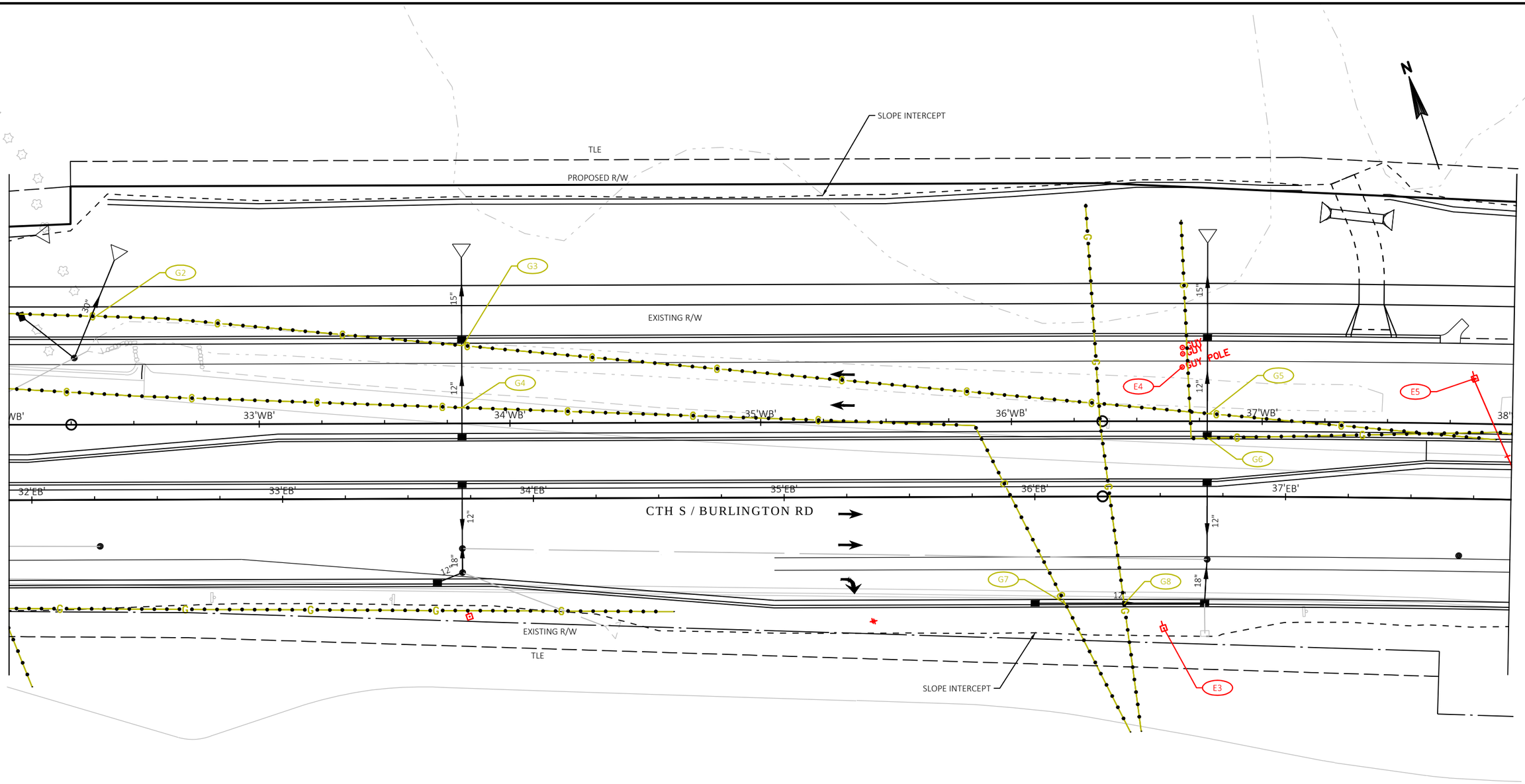

UTILITY (FACILITY)	SYMBOL/COLOR CODE	ID
AT&T (COMMUNICATIONS)	—T—	A
CHARTER (COMMUNICATIONS)	—TV—	C
WE ENERGIES (GAS)	—G—	G
WE ENERGIES (ELECTRIC)	—E—	E
CITY OF KENOSHA (LIGHTING)	—E—	L
NOT FIELD VERIFIED	-• • • • • -	

UTILITIES SHOWN AS OF AUGUST 2019

SHEET 2 OF 18

PROJECT NO: RD16-003	HWY: CTH S	COUNTY: KENOSHA	UTILITY DETAILS	SHEET 156	E

FILE NAME : T:\1165811\CIVIL3D\1165811\SHEETSPLAN\023001-UP.DWG
LAYOUT NAME - 2

PLOT DATE : 5/11/2020 1:46 PM PLOT BY : GUILLAMA, TINA PLOT NAME : PLOT SCALE : 1 IN:40 FT

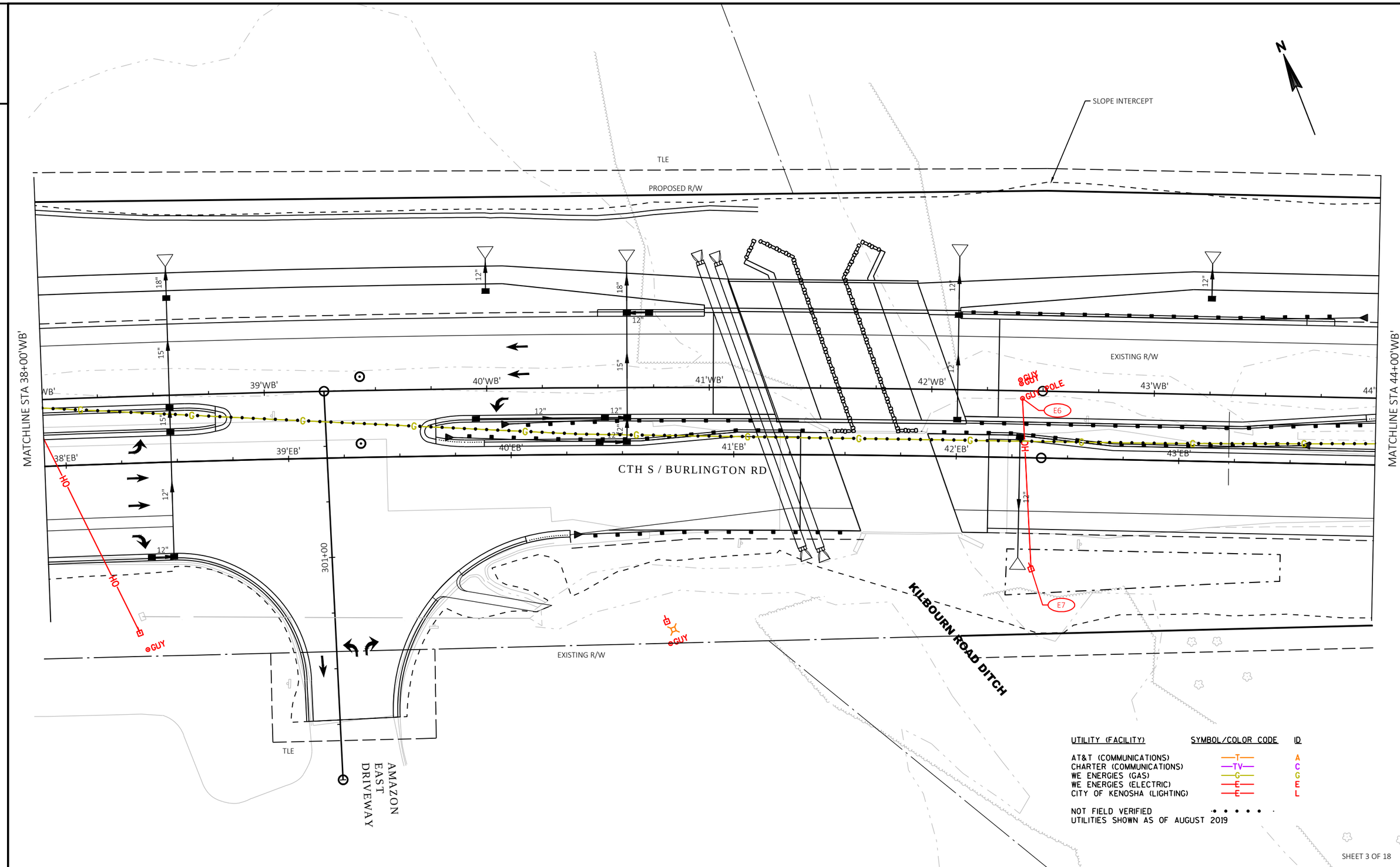

PROJECT NO: RD16-003	HWY: CTH S	COUNTY: KENOSHA	UTILITY DETAILS	SHEET 157	E

FILE NAME : T:\1165811\CIVIL3D\1165811\SHEETSPLAN\023001-UP.DWG
LAYOUT NAME - 3
PLOT DATE : 5/11/2020 1:47 PM
PLOT BY : GUILLAMA, TINA
PLOT NAME :
PLOT SCALE : 1 IN:40 FT
WISDOT/CADDS SHEET 42

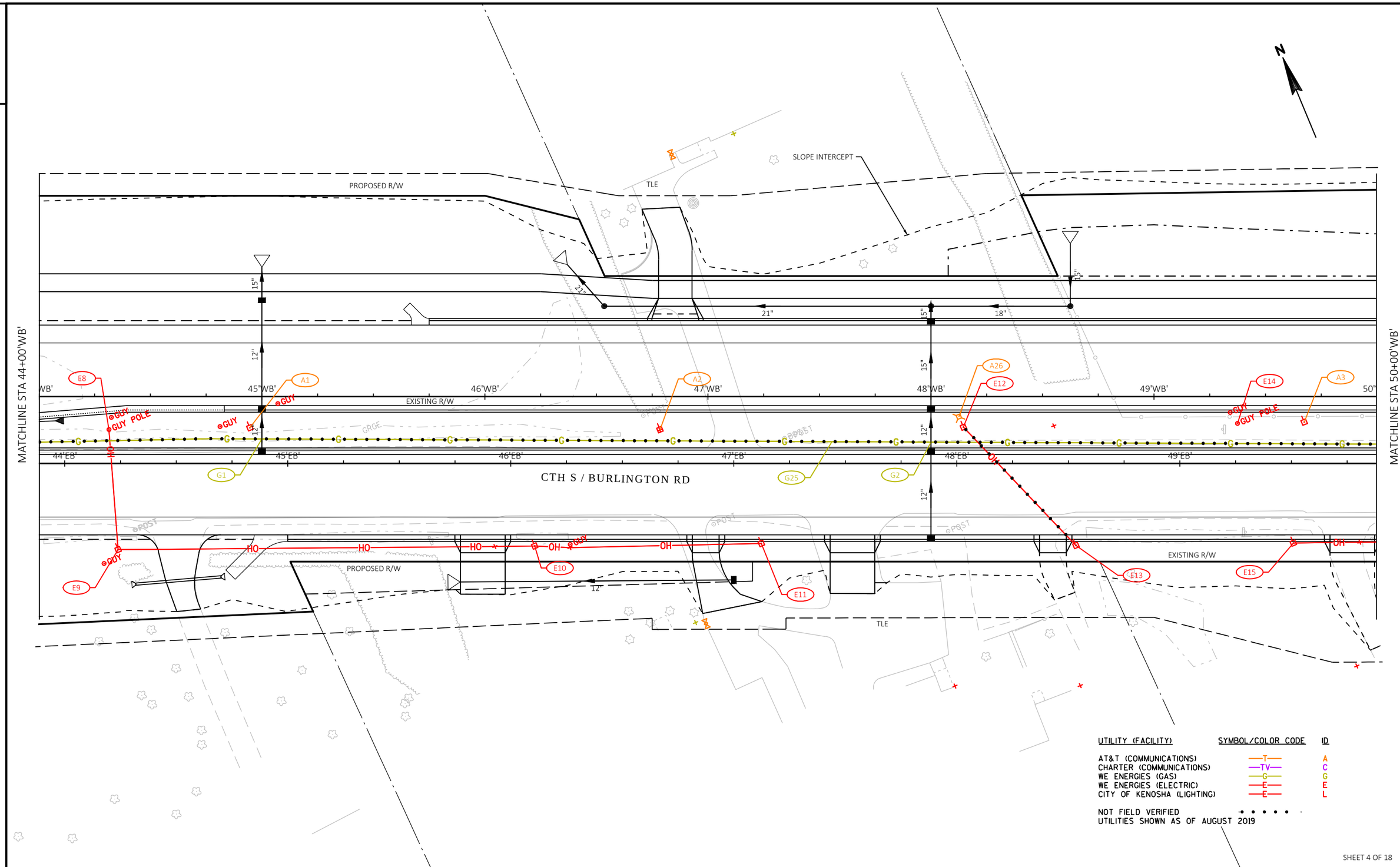

PROJECT NO: RD16-003	HWY: CTH S	COUNTY: KENOSHA	UTILITY DETAILS	SHEET 158	E

FILE NAME : T:\1165811\CIVIL3D\1165811\SHEETSPLAN\023001-UP.DWG
LAYOUT NAME - 4
PLOT DATE : 5/11/2020 1:47 PM
PLOT BY : GUILLAMA, TINA
PLOT NAME :
PLOT SCALE : 1 IN:40 FT
WISDOT/CADDS SHEET 42

2

2

MATCHLINE STA 50+00'WB'

MATCHLINE STA 56+00'WB'

SLOPE INTERCEPT

TLE

PROPOSED R/W

EXISTING R/W

CTH S / BURLINGTON RD

50'EB'

51'EB'

52'EB'

53'EB'

54'EB'

55'EB'

51'WB'

52'WB'

53'WB'

54'WB'

55'WB'

15"

12"

12"

A4

E17

E19

G3

G25

E18

E20

E21

E16

OH

UTILITY (FACILITY) | SYMBOL/COLOR CODE | ID

AT&T (COMMUNICATIONS) — T — A
CHARTER (COMMUNICATIONS) — TV — C
WE ENERGIES (GAS) — G — G
WE ENERGIES (ELECTRIC) — E — E
CITY OF KENOSHA (LIGHTING) — E — L

NOT FIELD VERIFIED
UTILITIES SHOWN AS OF AUGUST 2019

SHEET 5 OF 18

PROJECT NO: RD16-003	HWY: CTH S	COUNTY: KENOSHA	UTILITY DETAILS	SHEET 159	E

FILE NAME : T:\1165811\CIVIL3D\1165811\SHEETSPLAN\023001-UP.DWG
LAYOUT NAME - 5

PLOT DATE : 5/11/2020 1:47 PM PLOT BY : GUILLAMA, TINA PLOT NAME : PLOT SCALE : 1 IN:40 FT

WISDOT/CADDS SHEET 42

2

2

MATCHLINE STA 56+00'WB'

MATCHLINE STA 62+00'WB'

PROPOSED R/W

SLOPE INTERCEPT

TLE

EXISTING R/W

CTH S / BURLINGTON RD

PROPOSED R/W

TLE

SEPC

WELL

FLAG

POST

A5

A6

A7

G4

G5

G25

E22

E23

E24

OH

15"

12"

55'EB'

56'EB'

57'EB'

58'EB'

59'EB'

60'EB'

61'EB'

57'WB'

58'WB'

59'WB'

60'WB'

61'WB'

62'

N

UTILITY (FACILITY)	SYMBOL/COLOR CODE	ID
AT&T (COMMUNICATIONS)	—T—	A
CHARTER (COMMUNICATIONS)	—TV—	C
WE ENERGIES (GAS)	—G—	G
WE ENERGIES (ELECTRIC)	—E—	E
CITY OF KENOSHA (LIGHTING)	—E—	L

NOT FIELD VERIFIED

UTILITIES SHOWN AS OF AUGUST 2019

SHEET 6 OF 18

PROJECT NO: RD16-003	HWY: CTH S	COUNTY: KENOSHA	UTILITY DETAILS	SHEET 160	E

FILE NAME : T:\1165811\CIVIL3D\1165811\SHEETSPLAN\023001-UP.DWG
LAYOUT NAME - 6

PLOT DATE : 5/11/2020 1:48 PM

PLOT BY : GUILLAMA, TINA

PLOT NAME :

PLOT SCALE : 1 IN:40 FT

WISDOT/CADDS SHEET 42

2

2

SLOPE INTERCEPT

TLE

PROPOSED R/W

EXISTING R/W

CTH S / BURLINGTON RD

MATCHLINE STA 62+00'WB'

MATCHLINE STA 68+00'WB'

62'WB' 63'WB' 64'WB' 65'WB' 66'WB' 67'WB' 68'

62'EB' 63'EB' 64'EB' 65'EB' 66'EB' 67'EB'

12" 24"X38"

A8 A9 A10 A27 G5 G7 G8 G25 E25 E26 E27 E28

OH

UTILITY (FACILITY)	SYMBOL/COLOR CODE	ID
AT&T (COMMUNICATIONS)	—T—	A
CHARTER (COMMUNICATIONS)	—TV—	C
WE ENERGIES (GAS)	—G—	G
WE ENERGIES (ELECTRIC)	—E—	E
CITY OF KENOSHA (LIGHTING)	—E—	L

NOT FIELD VERIFIED

UTILITIES SHOWN AS OF AUGUST 2019

SHEET 7 OF 18

PROJECT NO: RD16-003	HWY: CTH S	COUNTY: KENOSHA	UTILITY DETAILS	SHEET 161	E

FILE NAME : T:\1165811\CIVIL3D\1165811\SHEETSPLAN\023001-UP.DWG
LAYOUT NAME - 7

PLOT DATE : 5/11/2020 1:48 PM PLOT BY : GUILLAMA, TINA PLOT NAME : PLOT SCALE : 1 IN:40 FT

WISDOT/CADDS SHEET 42

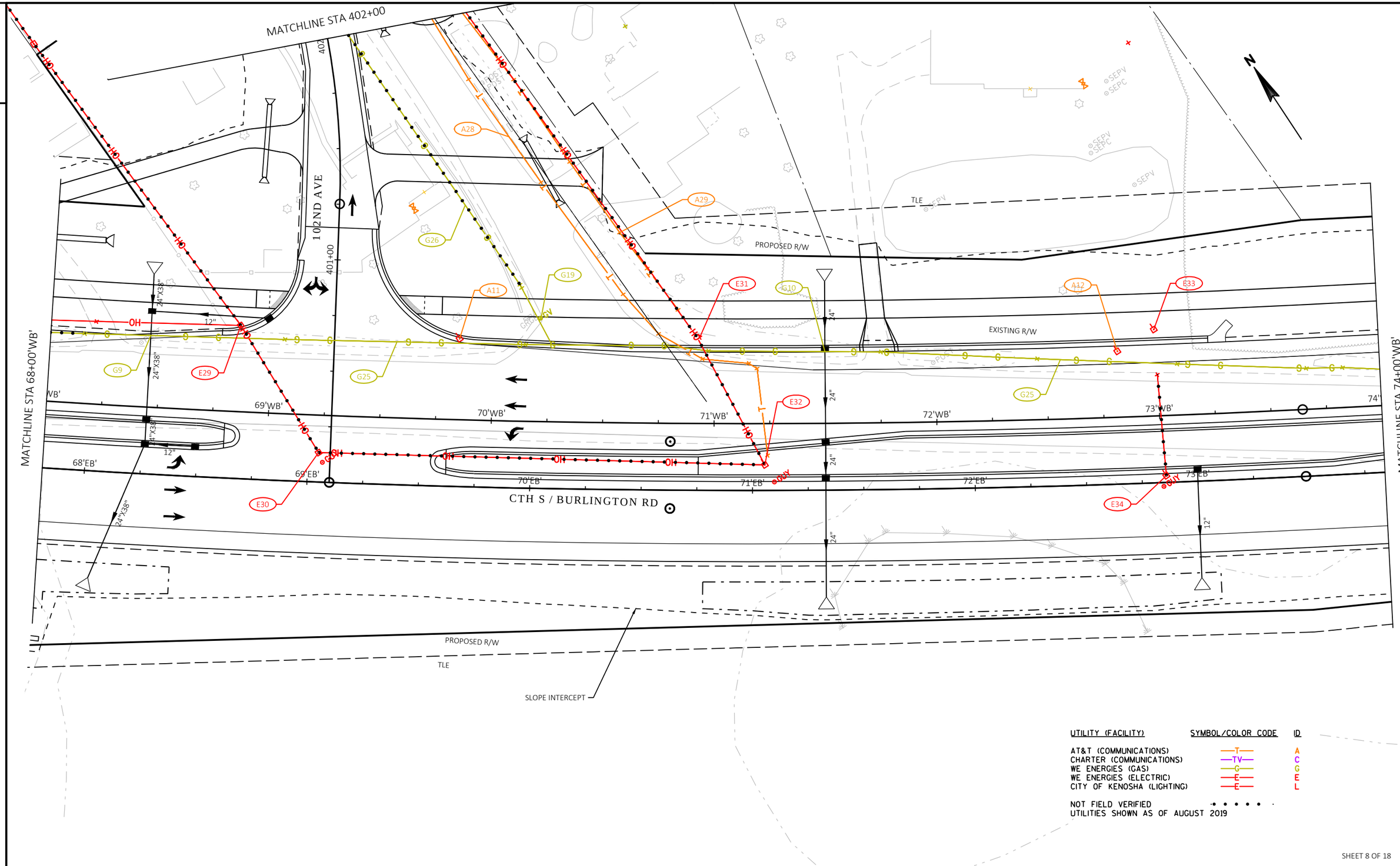

PROJECT NO: RD16-003	HWY: CTH S	COUNTY: KENOSHA	UTILITY DETAILS	SHEET 162	E

FILE NAME : T:\1165811\CIVIL3D\1165811\SHEETSPLAN\023001-UP.DWG
LAYOUT NAME - 8
PLOT DATE : 5/11/2020 1:49 PM
PLOT BY : GUILLAMA, TINA
PLOT NAME :
PLOT SCALE : 1 IN:40 FT
WISDOT/CADDS SHEET 42

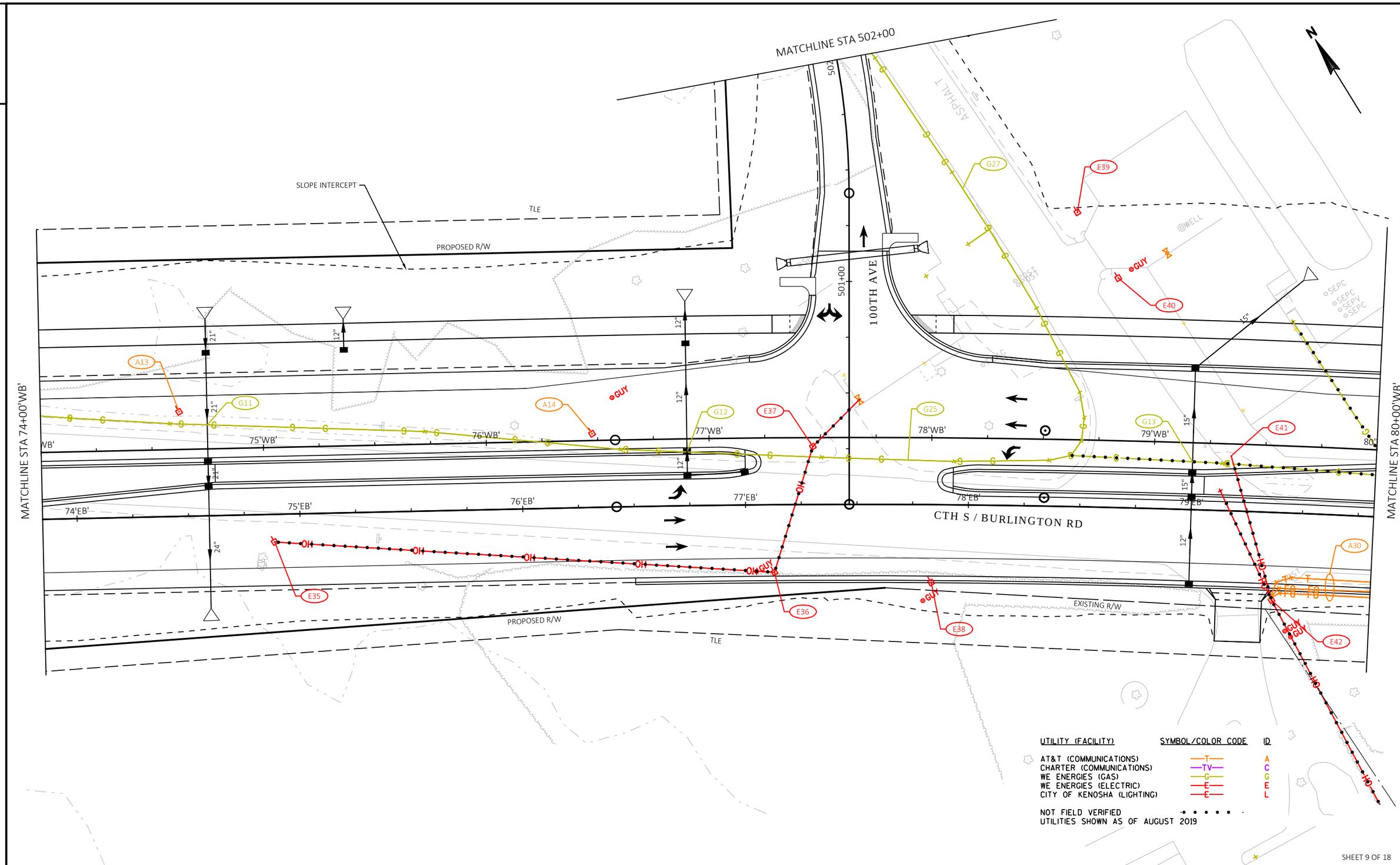

PROJECT NO: RD16-003	HWY: CTH S	COUNTY: KENOSHA	UTILITY DETAILS	SHEET 163	E

FILE NAME : T:\1165811\CIVIL3D\1165811\SHEETSPLAN\023001-UP.DWG
LAYOUT NAME - 9
PLOT DATE : 5/11/2020 1:49 PM
PLOT BY : GUILLAMA, TINA
PLOT NAME :
PLOT SCALE : 1 IN:40 FT
WISDOT/CADDS SHEET 42

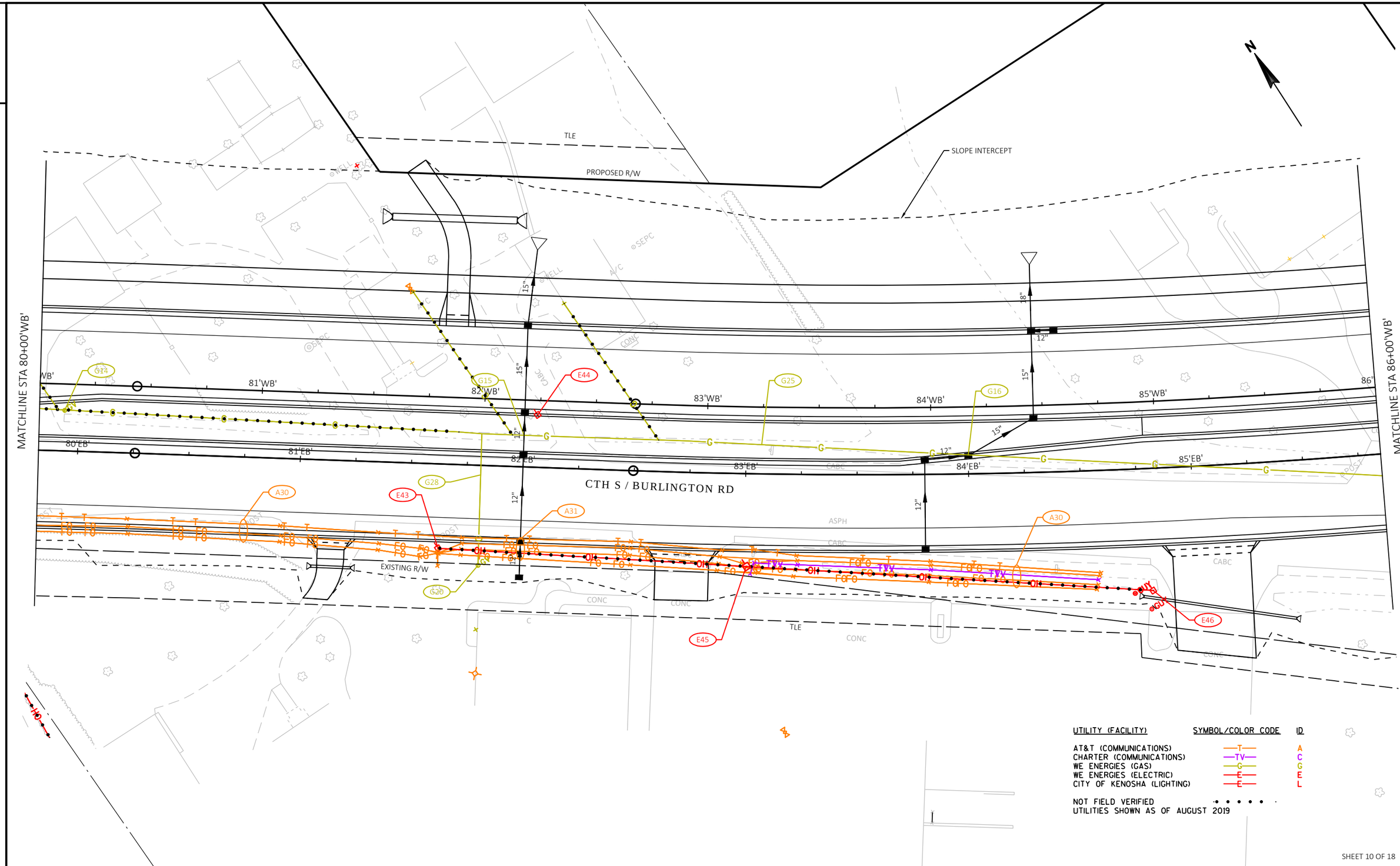

PROJECT NO: RD16-003	HWY: CTH S	COUNTY: KENOSHA	UTILITY DETAILS	SHEET 164	E

FILE NAME : T:\1165811\CIVIL3D\1165811\SHEETSPLAN\023001-UP.DWG
LAYOUT NAME - 10
PLOT DATE : 5/11/2020 1:50 PM
PLOT BY : GUILLAMA, TINA
PLOT NAME :
PLOT SCALE : 1 IN:40 FT
WISDOT/CADDS SHEET 42

2

2

MATCHLINE STA 611+75

MATCHLINE STA 86+00'WB'

MATCHLINE STA 92+00'WB'

96TH AVE CONNECTOR

SLOPE INTERCEPT

CTH S / 38TH STREET

CTH S / BURLINGTON RD

38TH ST

PROPOSED R/W

EXISTING R/W

TLE

ASPHALT

CONCRETE

611+00

610+00

609+00

A32

E47

E48

E49

E50

E51

E52

E53

E54

E55

E57

G17

G21

G25

G29

L1

OH

GUY

12"

15"

43"X68"

33"X49" CMP

86'EB'

87'EB'

88'EB'

89'EB'

90'EB'

91'EB'

87'WB'

88'WB'

89'WB'

90'WB'

91'WB'

92'

N

UTILITY (FACILITY)	SYMBOL/COLOR CODE	ID
AT&T (COMMUNICATIONS)	T	A
CHARTER (COMMUNICATIONS)	TV	C
WE ENERGIES (GAS)	G	G
WE ENERGIES (ELECTRIC)	E	E
CITY OF KENOSHA (LIGHTING)	E	L
NOT FIELD VERIFIED		
UTILITIES SHOWN AS OF AUGUST 2019		

SHEET 11 OF 18

PROJECT NO: RD16-003	HWY: CTH S	COUNTY: KENOSHA	UTILITY DETAILS	SHEET 165	E

FILE NAME : T:\1165811\CIVIL3D\1165811\SHEETSPLAN\023001-UP.DWG
LAYOUT NAME - 11

PLOT DATE : 5/11/2020 1:50 PM PLOT BY : GUILLAMA, TINA PLOT NAME : PLOT SCALE : 1 IN:40 FT

WISDOT/CADDS SHEET 42

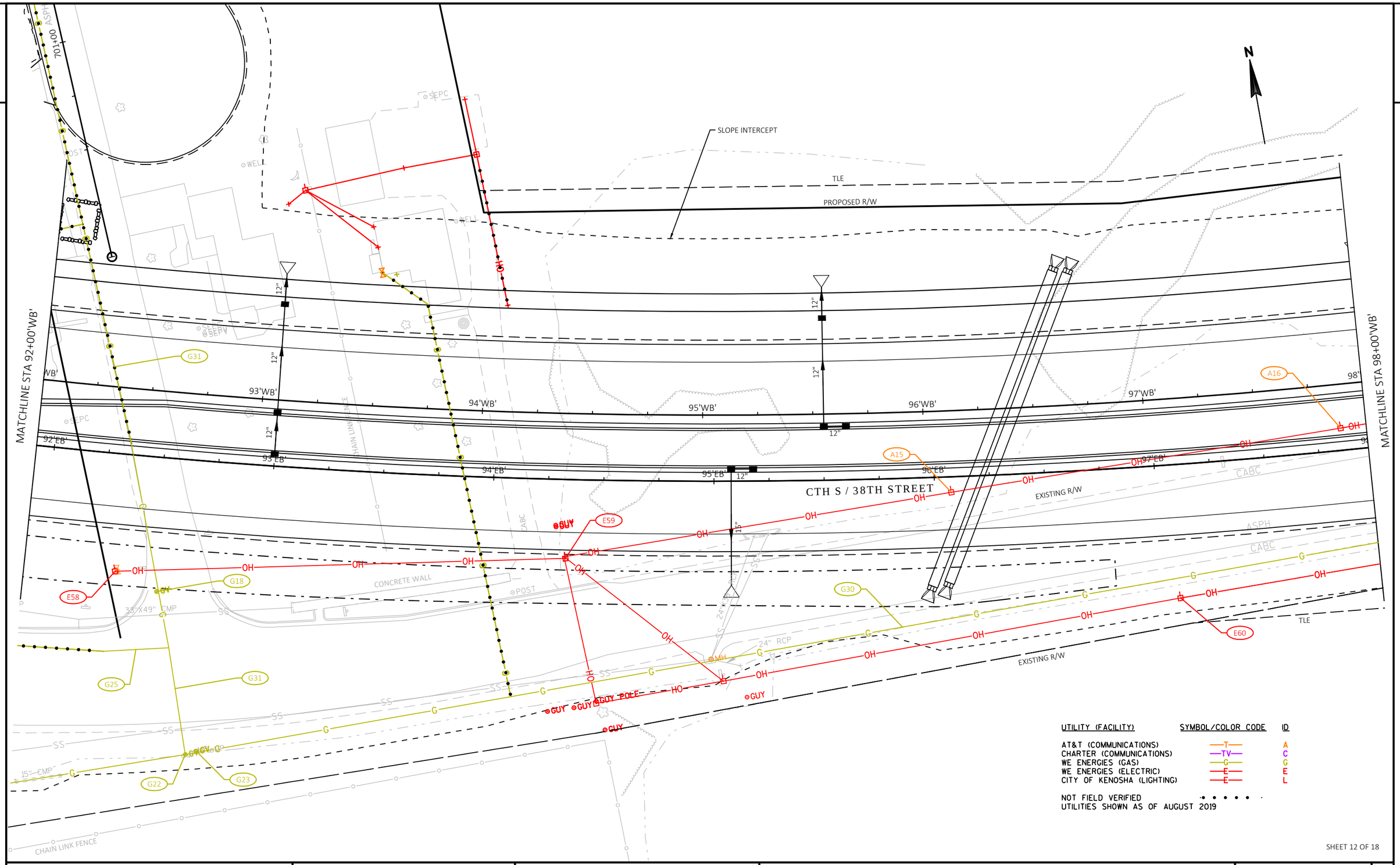

PROJECT NO: RD16-003	HWY: CTH S	COUNTY: KENOSHA	UTILITY DETAILS	SHEET 166	E

FILE NAME : T:\1165811\CIVIL3D\1165811\SHEETSPLAN\023001-UP.DWG
LAYOUT NAME - 12
PLOT DATE : 5/11/2020 1:50 PM
PLOT BY : GUILLAMA, TINA
PLOT NAME :
PLOT SCALE : 1 IN:40 FT
WISDOT/CADDS SHEET 42

2

2

N

SLOPE INTERCEPT

TLE

PROPOSED R/W

MATCHLINE STA 98+00'WB'

MATCHLINE STA 104+00'WB'

99'WB'

100'WB'

101'WB'

102'WB'

103'WB'

99'EB'

100'EB'

101'EB'

102'EB'

103'EB'

A17

A18

A19

A20

GUY

EXISTING R/W

CTH S / 38TH STREET

G30

E61

E62

E63

TLE

ASPH

CONC

UTILITY (FACILITY) | SYMBOL/COLOR CODE | ID

UTILITY (FACILITY)	SYMBOL/COLOR CODE	ID
AT&T (COMMUNICATIONS)	T	A
CHARTER (COMMUNICATIONS)	TV	C
WE ENERGIES (GAS)	G	G
WE ENERGIES (ELECTRIC)	E	E
CITY OF KENOSHA (LIGHTING)	E	L

NOT FIELD VERIFIED

UTILITIES SHOWN AS OF AUGUST 2019

SHEET 13 OF 18

PROJECT NO: RD16-003	HWY: CTH S	COUNTY: KENOSHA	UTILITY DETAILS	SHEET 167	E

FILE NAME : T:\1165811\CIVIL3D\1165811\SHEETSPLAN\023001-UP.DWG
LAYOUT NAME - 13

PLOT DATE : 5/11/2020 1:51 PM PLOT BY : GUILLAMA, TINA PLOT NAME : PLOT SCALE : 1 IN:40 FT

WISDOT/CADDS SHEET 42

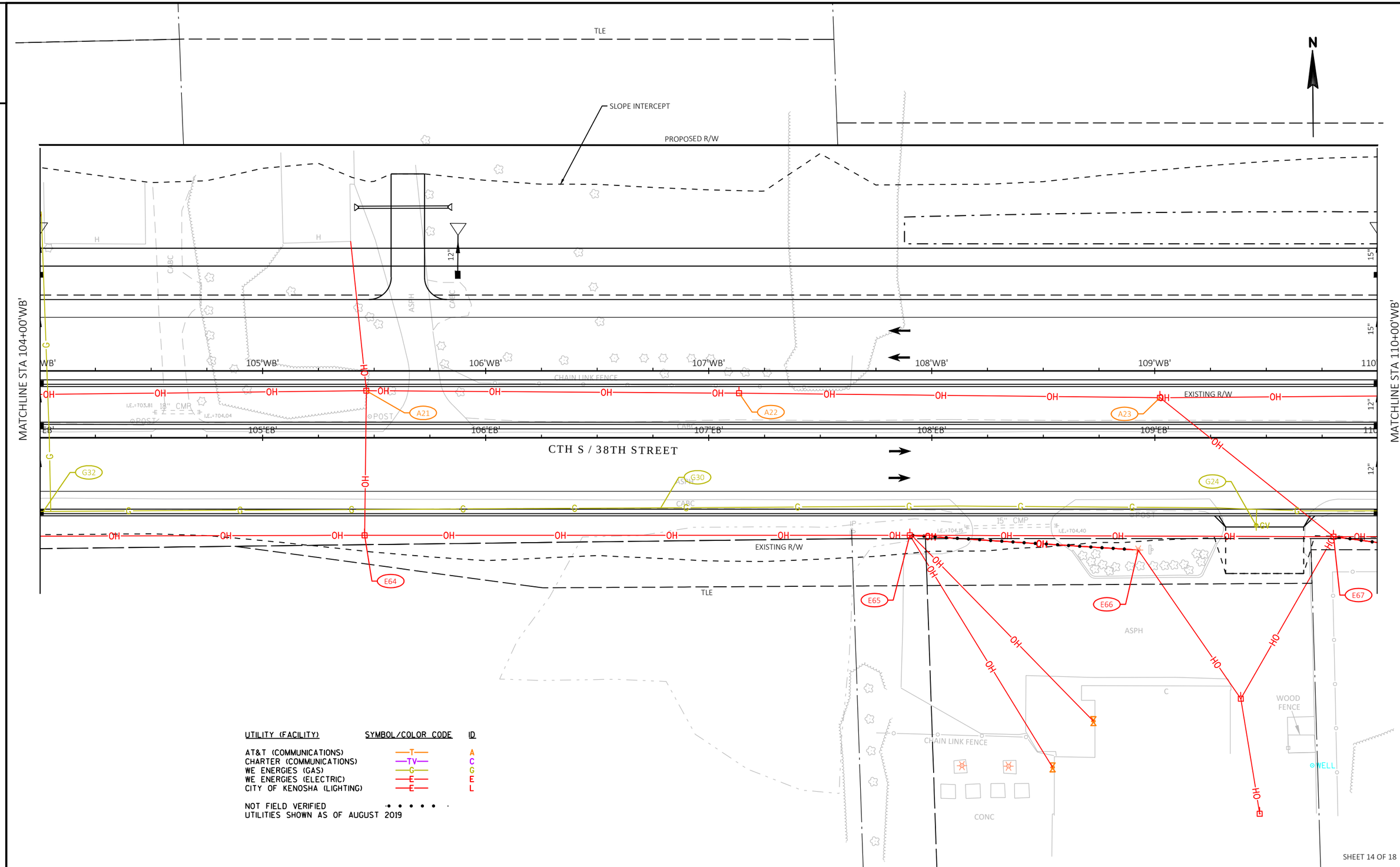

PROJECT NO: RD16-003	HWY: CTH S	COUNTY: KENOSHA	UTILITY DETAILS	SHEET 168	E

FILE NAME : T:\1165811\CIVIL3D\1165811\SHEETSPLAN\023001-UP.DWG
LAYOUT NAME - 14
PLOT DATE : 5/11/2020 1:51 PM
PLOT BY : GUILLAMA, TINA
PLOT NAME :
PLOT SCALE : 1 IN:40 FT
WISDOT/CADDS SHEET 42

2

2

N

SLOPE INTERCEPT

TLE

PROPOSED R/W

MATCHLINE STA 110+00'WB'

15"

15"

12"

12"

WB'

111'WB'

112'WB'

113'WB'

114'WB'

115'WB'

116'WB'

A24

A25

OH

EXISTING R/W

EB'

111'EB'

112'EB'

113'EB'

114'EB'

115'EB'

116'EB'

CTH S / 38TH STREET

G33

G30

G

TLE

CHAIN LINK FENCE

E69

E68

END PROJECT
STA 113+00'WB'
MATCH WISDOT ID: 3210-00-75

UTILITY (FACILITY)	SYMBOL/COLOR CODE	ID
AT&T (COMMUNICATIONS)	—T—	A
CHARTER (COMMUNICATIONS)	—TV—	C
WE ENERGIES (GAS)	—G—	G
WE ENERGIES (ELECTRIC)	—E—	E
CITY OF KENOSHA (LIGHTING)	—E—	L
NOT FIELD VERIFIED	-•-•-•-	

UTILITIES SHOWN AS OF AUGUST 2019

SHEET 15 OF 18

PROJECT NO: RD16-003	HWY: CTH S	COUNTY: KENOSHA	UTILITY DETAILS	SHEET 169	E

FILE NAME : T:\1165811\CIVIL3D\1165811\SHEETSPLAN\023001-UP.DWG
LAYOUT NAME - 15

PLOT DATE : 5/11/2020 1:52 PM PLOT BY : GUILLAMA, TINA PLOT NAME : PLOT SCALE : 1 IN:40 FT

WISDOT/CADDS SHEET 42

2

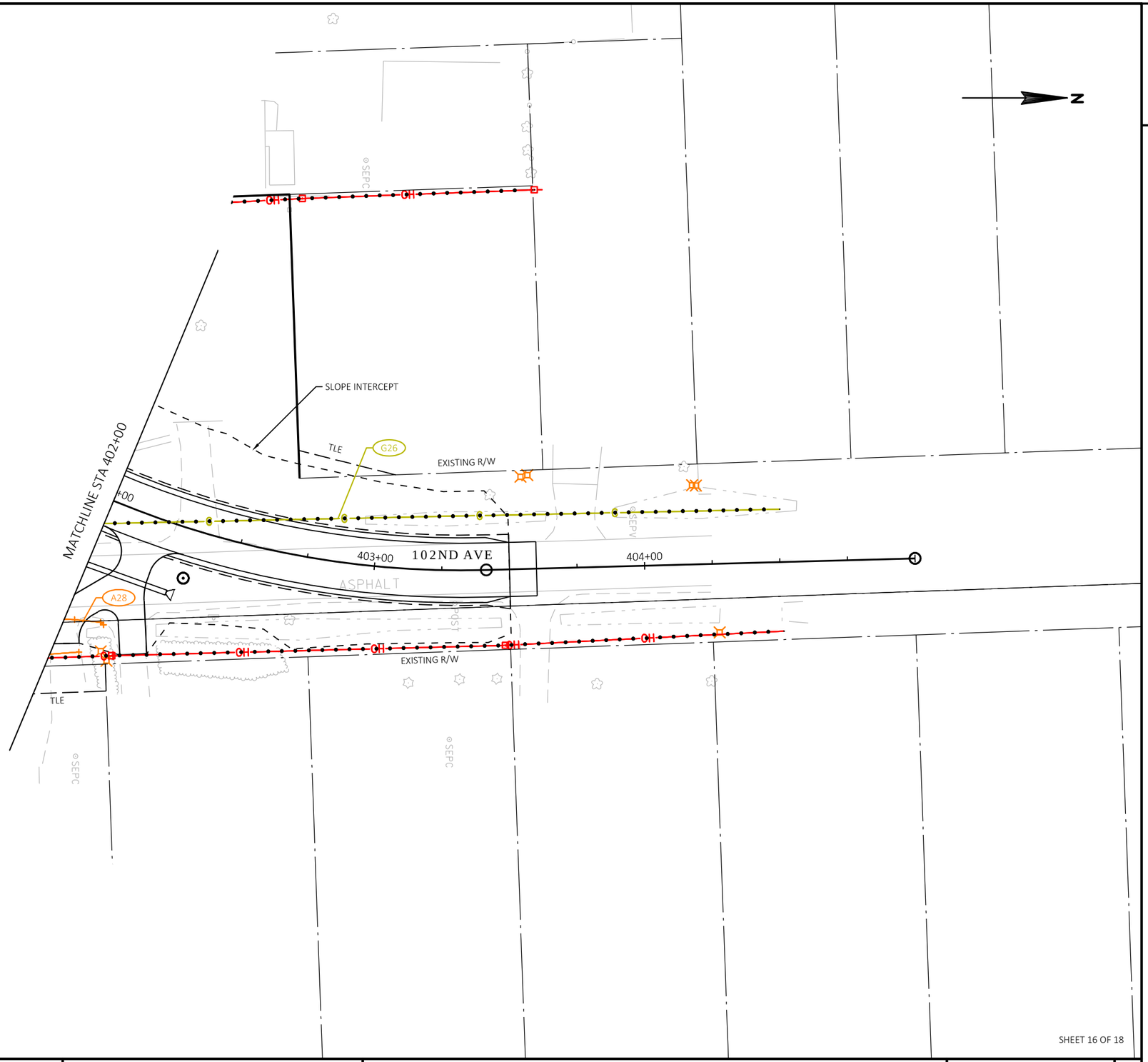

UTILITY (FACILITY)	SYMBOL/COLOR CODE	ID
AT&T (COMMUNICATIONS)	—T—	A
CHARTER (COMMUNICATIONS)	—TV—	C
WE ENERGIES (GAS)	—G—	G
WE ENERGIES (ELECTRIC)	—E—	E
CITY OF KENOSHA (LIGHTING)	—E—	L
NOT FIELD VERIFIED	· · · · ·	

UTILITIES SHOWN AS OF AUGUST 2019

SHEET 16 OF 18

PROJECT NO: RD16-003	HWY: CTH S	COUNTY: KENOSHA	UTILITY DETAILS - 102ND AVE	SHEET 170	E

FILE NAME : T:\1165811\CIVIL3D\1165811\SHEETSPLAN\023002-UP.DWG
LAYOUT NAME - 16

PLOT DATE : 5/11/2020 2:00 PM PLOT BY : GUILLAMA, TINA PLOT NAME : PLOT SCALE : 1 IN:40 FT

WISDOT/CADDS SHEET 42

2

N

UTILITY (FACILITY)	SYMBOL/COLOR CODE	ID
AT&T (COMMUNICATIONS)	—T—	A
CHARTER (COMMUNICATIONS)	—TV—	C
WE ENERGIES (GAS)	—G—	G
WE ENERGIES (ELECTRIC)	—E—	E
CITY OF KENOSHA (LIGHTING)	—E—	L
NOT FIELD VERIFIED	· · · · ·	

UTILITIES SHOWN AS OF AUGUST 2019

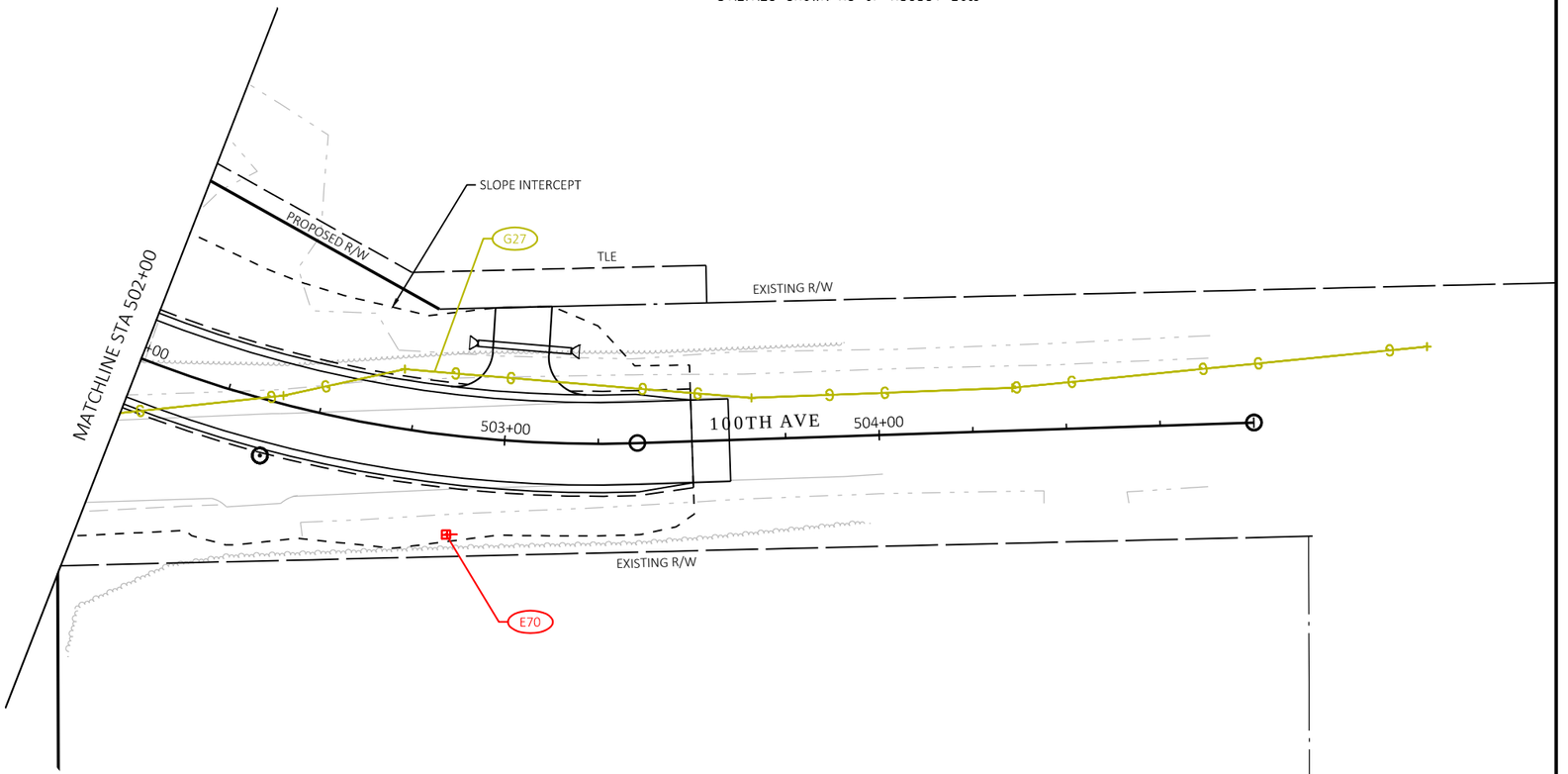

SHEET 17 OF 18

PROJECT NO: RD16-003	HWY: CTH S	COUNTY: KENOSHA	UTILITY DETAILS - 100TH AVE	SHEET 171	E

FILE NAME : T:\1165811\CIVIL3D\1165811\SHEETSPLAN\023002-UP.DWG
LAYOUT NAME - 17

PLOT DATE : 5/11/2020 2:00 PM PLOT BY : GUILLAMA, TINA PLOT NAME : PLOT SCALE : 1 IN:40 FT

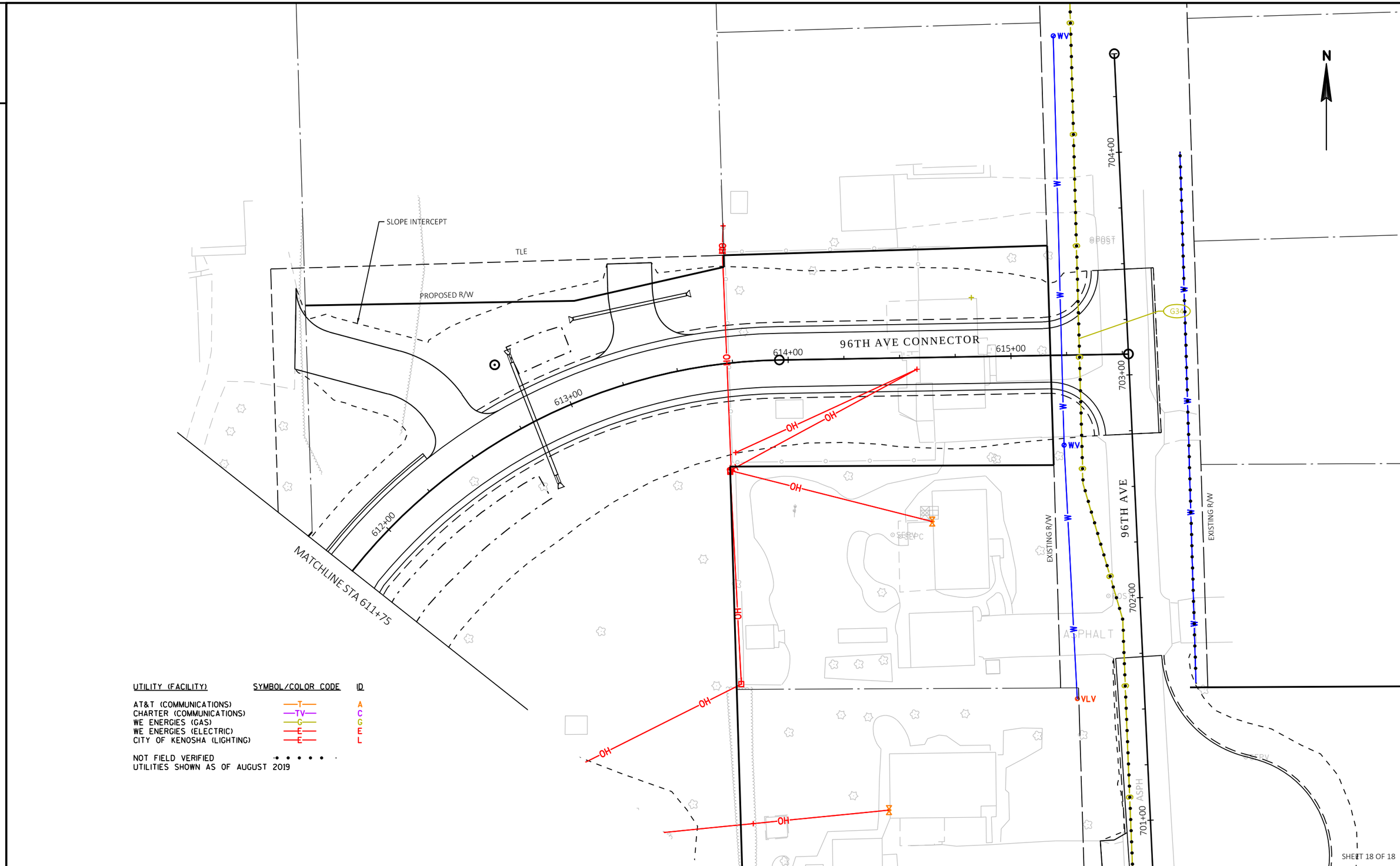

PROJECT NO: RD16-003	HWY: CTH S	COUNTY: KENOSHA	UTILITY DETAILS - 38TH ST	SHEET 172	E

FILE NAME : T:\1165811\CIVIL3D\1165811\SHEETSPLAN\023002-UP.DWG
LAYOUT NAME - 18
PLOT DATE : 5/11/2020 2:01 PM
PLOT BY : GUILLAMA, TINA
PLOT NAME :
PLOT SCALE : 1 IN:40 FT
WISDOT/CADDS SHEET 42

2

2

LEGEND

EXISTING SIGN ON SIGNAL, OVERHEAD, OR LIGHTING POLE

EXISTING SIGN ON SINGLE POST

EXISTING SIGN ON MULTIPLE POSTS

ESTR EXISTING SIGN TO REMAIN

MOVE EXISTING SIGN TO BE MOVED

MBO EXISTING SIGN TO BE MOVED BY OTHERS

N

100 R6-2L ONE WAY

101 R4-7

W5-54D

102

103 W3-3 MOVE

104 SPEED LIMIT 45 R2-1

105 W6-1

106 W5-52L

CTH S WB R/L

CTH S/BURLINGTON ROAD

28'WB' 30'WB' 32'WB' 34'WB' 36'WB' 38'WB' 40'WB'

28'EB' 30'EB' 32'EB' 34'EB' 36'EB' 38'EB' 40'EB'

CTH S EB C/L

MATCHLINE STA 41+25.00

AMAZON WEST DRIVEWAY

DO NOT ENTER R5-1 ESTR

STOP R1-1 ESTR

RIGHT LANE MUST TURN RIGHT R3-7R 107

ONLY ONLY R3-8D 108

WRONG WAY R5-1A MOVE 109

ONLY R3-5R 110

AMAZON EAST DRIVEWAY

STOP R1-1 ESTR

Kenosha 4 D2-1 MOVE 111

SHEET 1 OF 5

PROJECT NO: RD16-003	HWY: CTH S	COUNTY: KENOSHA	SIGNING REMOVALS	SHEET 173	E

FILE NAME : T:\1165811\CIVIL3D\1165811\SHEETSPLAN\023101-ES.DWG
LAYOUT NAME - 1

PLOT DATE : 5/11/2020 2:03 PM PLOT BY : GUILLAMA, TINA PLOT NAME : PLOT SCALE : 1 IN:100 FT

WISDOT/CADDS SHEET 42

2

LEGEND

- EXISTING SIGN ON SIGNAL, OVERHEAD, OR LIGHTING POLE
- EXISTING SIGN ON SINGLE POST
- EXISTING SIGN ON MULTIPLE POSTS
- ESTR EXISTING SIGN TO REMAIN
- MOVE EXISTING SIGN TO BE MOVED
- MBO EXISTING SIGN TO BE MOVED BY OTHERS

N

MATCHLINE STA 41+25.00

MATCHLINE STA 56+50.00

CTH S / BURLINGTON ROAD

CTH S WB R/L

CTH S EB C/L

42'WB' 44'WB' 46'WB' 48'WB' 50'WB' 52'WB' 54'WB' 56'WB'

42'EB' 44'EB' 46'EB' 48'EB' 50'EB' 52'EB' 54'EB' 56'EB'

112 W5-52R

113 SPEED LIMIT 45 R2-1 MOVE

114 SPEED LIMIT 45 R2-1

115 W5-52R

116 W5-52L

117 SPEED LIMIT 45 R2-1 MOVE

118 W1-2R

119 SPEED LIMIT 45 R2-1

SHEET 2 OF 5

PROJECT NO: RD16-003	HWY: CTH S	COUNTY: KENOSHA	SIGNING REMOVALS	SHEET 174	E

FILE NAME : T:\1165811\CIVIL3D\1165811\SHEETSPLAN\023101-ES.DWG
LAYOUT NAME - 2

PLOT DATE : 5/11/2020 2:03 PM PLOT BY : GUILLAMA, TINA PLOT NAME : PLOT SCALE : 1 IN:100 FT

2

2

LEGEND

EXISTING SIGN ON SIGNAL, OVERHEAD, OR LIGHTING POLE

EXISTING SIGN ON SINGLE POST

EXISTING SIGN ON MULTIPLE POSTS

ESTR EXISTING SIGN TO REMAIN

MOVE EXISTING SIGN TO BE MOVED

MBO EXISTING SIGN TO BE MOVED BY OTHERS

N

MATCHLINE STA 56+50.00

MATCHLINE STA 71+75.00

CTH S / BURLINGTON ROAD

102ND AVE

58'WB' 60'WB' 62'WB' 64'WB' 66'WB' 68'WB' 70'WB'

58'EB' 60'EB' 62'EB' 64'EB' 66'EB' 68'EB' 70'EB'

CTH S WB R/L

CTH S EB C/L

120
W1-2L

121
STOP
R1-1

122
SLOW
CHILDREN
AT PLAY
MOVE

123
SPEED
LIMIT
25
R2-1

124
DEAD
END
W14-1

102nd Av
STREET NAME SIGN
153

Burlington Rd
STREET NAME SIGN
154

SNOW EMERGENCY
PARKING
REGULATIONS
- NO PARKING
- XX PM TO XX AM
- XX PM TO XX AM
R7-66
152

SHEET 3 OF 5

PROJECT NO: RD16-003	HWY: CTH S	COUNTY: KENOSHA	SIGNING REMOVALS	SHEET 175	E

FILE NAME : T:\1165811\CIVIL3D\1165811\SHEETSPLAN\023101-ES.DWG
LAYOUT NAME - 3

PLOT DATE : 5/11/2020 2:03 PM PLOT BY : GUILLAMA, TINA PLOT NAME : PLOT SCALE : 1 IN:100 FT

WISDOT/CADDS SHEET 42

2

2

LEGEND

- EXISTING SIGN ON SIGNAL, OVERHEAD, OR LIGHTING POLE
- EXISTING SIGN ON SINGLE POST
- EXISTING SIGN ON MULTIPLE POSTS
- ESTR EXISTING SIGN TO REMAIN
- MOVE EXISTING SIGN TO BE MOVED
- MBO EXISTING SIGN TO BE MOVED BY OTHERS

MATCHLINE STA 71+75.00

MATCHLINE STA 87+00.00

CTH S / BURLINGTON ROAD

CTH S /BURLINGTON ROAD

100TH AVE

38TH STREET

CTH S WB R/L

CTH S EB C/L

125 R2-1 SPEED LIMIT 45

126 R1-1 STOP

127 R12-1 WEIGHT LIMIT 8 TONS

128 R2-1 SPEED LIMIT 40

129 R2-1 SPEED LIMIT 45

130 R7-1R NO PARKING ANY TIME

131 R2-1 SPEED LIMIT 45

155 100th Ave STREET NAME SIGN

156 Burlington Rd STREET NAME SIGN

133 W1-10L

134 W13-1 35 MPH

136 R3-8F ONLY ONLY

72'EB' 74'EB' 76'EB' 78'EB' 80'EB' 82'EB' 84'EB' 86'EB'

72'WB' 74'WB' 76'WB' 78'WB' 80'WB' 82'WB' 84'WB' 86'WB'

605

SHEET 4 OF 5

PROJECT NO: RD16-003	HWY: CTH S	COUNTY: KENOSHA	SIGNING REMOVALS	SHEET 176	E

FILE NAME : T:\1165811\CIVIL3D\1165811\SHEETSPLAN\023101-ES.DWG
LAYOUT NAME - 4

PLOT DATE : 5/11/2020 2:04 PM PLOT BY : GUILLAMA, TINA PLOT NAME : PLOT SCALE : 1 IN:100 FT

WISDOT/CADDS SHEET 42

2

LEGEND

- EXISTING SIGN ON SIGNAL, OVERHEAD, OR LIGHTING POLE
- EXISTING SIGN ON SINGLE POST
- EXISTING SIGN ON MULTIPLE POSTS
- ESTR EXISTING SIGN TO REMAIN
- MOVE EXISTING SIGN TO BE MOVED
- MBO EXISTING SIGN TO BE MOVED BY OTHERS

N

MATCHLINE STA 87+00.00

MATCHLINE STA 102+25.00

96TH AVE CONNECTOR

96TH AVE

38TH STREET

38TH STREET R/L

CTH S / BURLINGTON ROAD

CTH S WB R/L

CTH S EB C/L

615

610

88'WB'

88'EB'

90'WB'

90'EB'

92'WB'

92'EB'

94'WB'

94'EB'

96'WB'

96'EB'

98'WB'

98'EB'

100'WB'

100'EB'

102'WB'

102'EB'

137 W1-7

138 R7-1D NO PARKING ANY TIME

140 R7-1D NO PARKING ANY TIME

141 R1-1 STOP

143 W14-1 DEAD END

142 R7-1L NO PARKING ANY TIME

145 W1-10R

146 35 MPH W13-1

147 R3-17 ESTR BIKE LANE ENDS R3-17B ESTR

147 R1-1 MOVE STOP

149 W1-6

150 W1-6

38th St STREET NAME SIGN 157

96th Ave STREET NAME SIGN 158

151 R2-1 SPEED LIMIT 45

SHEET 5 OF 5

PROJECT NO: RD16-003	HWY: CTH S	COUNTY: KENOSHA	SIGNING REMOVALS	SHEET 177	E

FILE NAME : T:\1165811\CIVIL3D\1165811\SHEETSPLAN\023101-ES.DWG
LAYOUT NAME - 5

PLOT DATE : 5/11/2020 2:04 PM PLOT BY : GUILLAMA, TINA PLOT NAME : PLOT SCALE : 1 IN:100 FT

2

2

LEGEND

EXISTING SIGN ON EXISTING POST

XXX EXISTING SIGN MOVED TO NEW LOCATION

XXX NEW SIGN

SIGN MOUNTED ON SINGLE POST

SIGN MOUNTED ON MULTIPLE POSTS

SIGN MOUNTED ON OTHER POLE/OVERHEAD

ESTR EXISTING SIGN TO REMAIN

N

200 R4-7 36"X48"

201 ONE WAY R6-2L 36"X48"

202 R4-7 36"X48"

103

213 BEGIN LEFT TURN LANE R3-20L 36"X54"

208 SPEED LIMIT 45 R2-1 36"X48"

203 SPEED LIMIT 45 R2-1 36"X48"

204 R4-7 36"X48"

205 ONE WAY R6-2L 36"X48"

206 R4-7 36"X48"

207 W5-52L 18"X54"

CTH S WB R/L

CTH S / BURLINGTON RD

28' WB' 30' WB' 32' WB' 34' WB' 36' WB' 38' WB' 40' WB'

28' EB' 30' EB' 32' EB' 34' EB' 36' EB' 38' EB' 40' EB'

CTH S EB C/L

MATCHLINE STA 41+25.00

DO NOT ENTER ESTR

AMAZON WEST DRIVEWAY

STOP ESTR

BEGIN RIGHT TURN LANE R3-20R 36"X54" 209

BEGIN LEFT TURN LANE R3-20L 36"X54" 210

WRONG WAY R5-1A 42"X30 211

WRONG WAY 109

DO NOT ENTER R5-1 36"X36" 212

AMAZON EAST DRIVEWAY

STOP ESTR

Kenosha 4 111

SHEET 1 OF 6

PROJECT NO: RD16-003	HWY: CTH S	COUNTY: KENOSHA	PERMANENT SIGNING	SHEET 178	E

FILE NAME : T:\1165811\CIVIL3D\1165811\SHEETSPLAN\023201-PS.DWG
LAYOUT NAME - 1

PLOT DATE : 5/11/2020 2:07 PM PLOT BY : GUILLAMA, TINA PLOT NAME : PLOT SCALE : 1 IN:100 FT

WISDOT/CADDS SHEET 42

2

LEGEND

EXISTING SIGN ON EXISTING POST

XXX EXISTING SIGN MOVED TO NEW LOCATION

XXX NEW SIGN

SIGN MOUNTED ON SINGLE POST

SIGN MOUNTED ON MULTIPLE POSTS

SIGN MOUNTED ON OTHER POLE/OVERHEAD

ESTR EXISTING SIGN TO REMAIN

N

214
W5-52R
18"X54"

215
W5-52L
18"X54"

216
BEGIN LEFT TURN LANE
R3-20L
36"X54"

104
SPEED LIMIT 45

217
W1-2R
36"X36"

218
SPEED LIMIT 45
R2-1
36"X48"

MATCHLINE STA 41+25.00

42'WB'
44'WB'
46'WB'
48'WB'
50'WB'
52'WB'
54'WB'
56'WB'
44'EB'
46'EB'
48'EB'
50'EB'
52'EB'
54'EB'
56'EB'
EB
CTH S WB R/L
CTH S EB C/L
CTH S / BURLINGTON RD
WELL

MATCHLINE STA 56+50.00

SPEED LIMIT 45
R2-1
36"X48"
221

W1-2R
36"X36"
220

SPEED LIMIT 45
113

W5-52R
18"X54"
219

SHEET 2 OF 6

PROJECT NO: RD16-003	HWY: CTH S	COUNTY: KENOSHA	PERMANENT SIGNING	SHEET 179	E

FILE NAME : T:\1165811\CIVIL3D\1165811\SHEETSPLAN\023201-PS.DWG
LAYOUT NAME - 2

PLOT DATE : 5/11/2020 2:08 PM PLOT BY : GUILLAMA, TINA PLOT NAME : PLOT SCALE : 1 IN:100 FT

2

2

LEGEND

EXISTING SIGN ON EXISTING POST

XXX EXISTING SIGN MOVED TO NEW LOCATION

XXX NEW SIGN

SIGN MOUNTED ON SINGLE POST

SIGN MOUNTED ON MULTIPLE POSTS

SIGN MOUNTED ON OTHER POLE/OVERHEAD

ESTR EXISTING SIGN TO REMAIN

MATCHLINE STA 56+50.00

MATCHLINE STA 71+75.00

CTH S / BURLINGTON ROAD

CTH S WB R/L

CTH S EB C/L

58'WB' 60'WB' 62'WB' 64'WB' 66'WB' 68'WB' 70'WB'

58'EB' 60'EB' 62'EB' 64'EB' 66'EB' 68'EB' 70'EB'

102ND AVE

222 W1-2L 36"X36"

223 SPEED LIMIT 45 R2-1 36"X48"

224 DIVIDED HIGHWAY R6-3A 30"X24"

225 STOP R1-1 30"X30"

226 SPEED LIMIT 25 R2-1 24"X30"

227 DEAD END W14-1 30"X30"

122 SLOW CHILDREN AT PLAY

297

296

228 W1-2L 36"X36"

229 BEGIN LEFT TURN LANE R3-20L 36"X54"

230 SPEED LIMIT 45 R2-1 36"X48"

232 R4-7 36"X48"

233 ONE WAY R6-2L 36"X48"

234 R4-7 36"X48"

SHEET 3 OF 6

PROJECT NO: RD16-003	HWY: CTH S	COUNTY: KENOSHA	PERMANENT SIGNING	SHEET 180	E

FILE NAME : T:\1165811\CIVIL3D\1165811\SHEETSPLAN\023201-PS.DWG
LAYOUT NAME - 3

PLOT DATE : 5/11/2020 2:08 PM PLOT BY : GUILLAMA, TINA PLOT NAME : PLOT SCALE : 1 IN:100 FT

WISDOT/CADDS SHEET 42

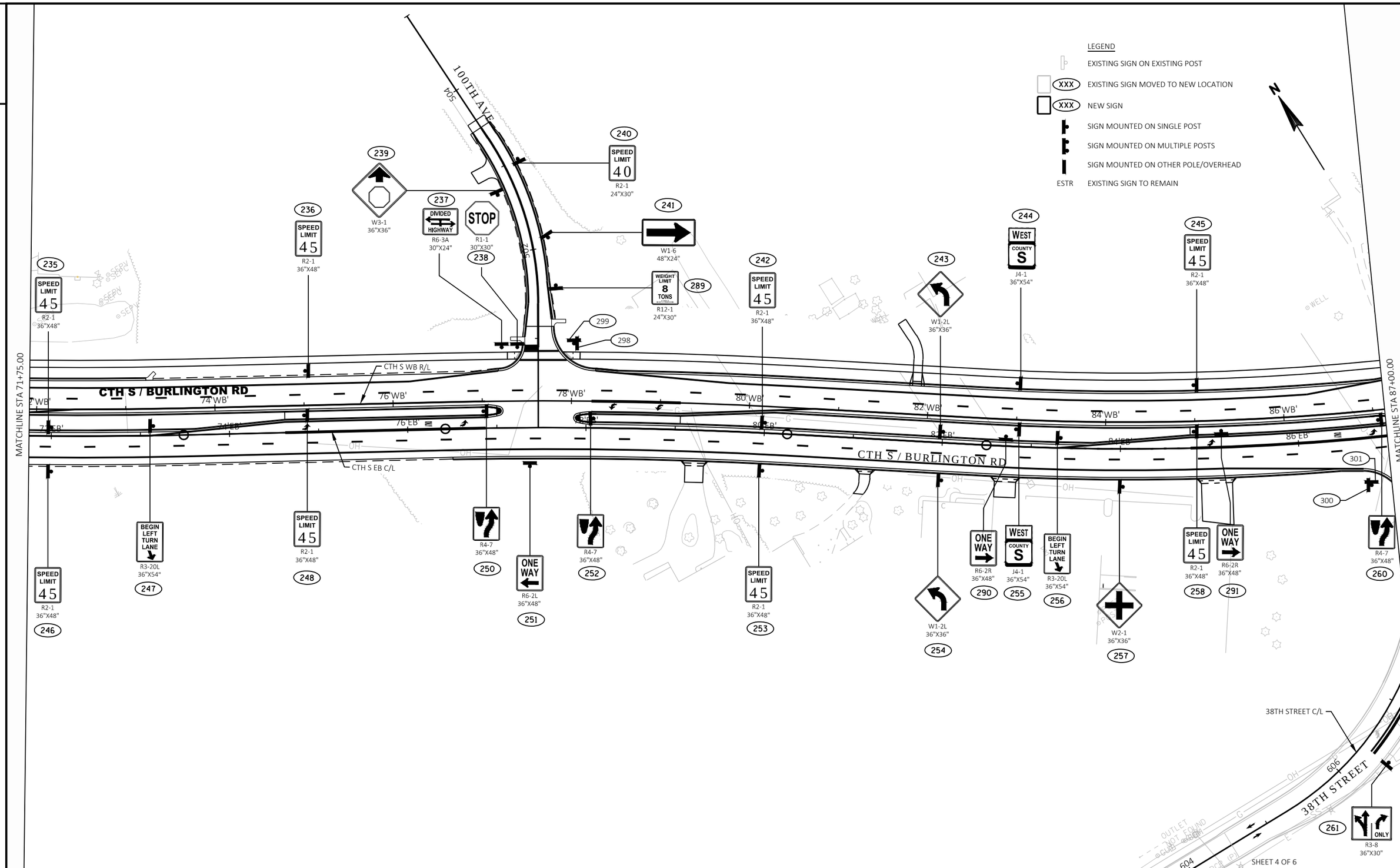

PROJECT NO: RD16-003	HWY: CTH S	COUNTY: KENOSHA	PERMANENT SIGNING	SHEET 181	E

FILE NAME : T:\1165811\CIVIL3D\1165811\SHEETSPLAN\023201-PS.DWG
LAYOUT NAME - 4
PLOT DATE : 5/11/2020 2:08 PM
PLOT BY : GUILLAMA, TINA
PLOT NAME :
PLOT SCALE : 1 IN:100 FT
WISDOT/CADDS SHEET 42

2

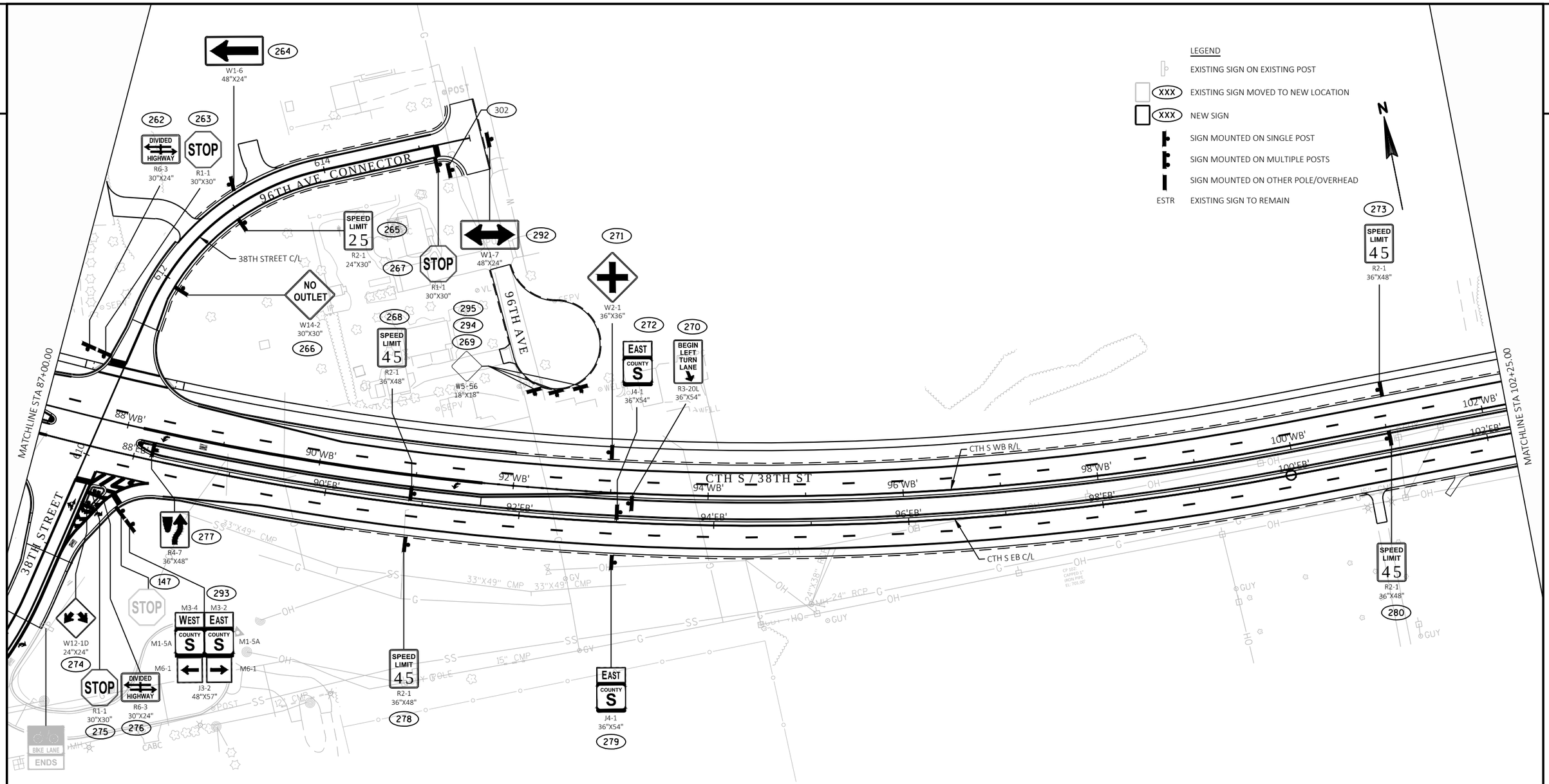

SHEET 5 OF 6

PROJECT NO: RD16-003	HWY: CTH S	COUNTY: KENOSHA	PERMANENT SIGNING	SHEET 182	E

FILE NAME : T:\1165811\CIVIL3D\1165811\SHEETSPLAN\023201-PS.DWG
LAYOUT NAME - 5

PLOT DATE : 5/11/2020 2:09 PM PLOT BY : GUILLAMA, TINA PLOT NAME : PLOT SCALE : 1 IN:100 FT

2

2

LEGEND

EXISTING SIGN ON EXISTING POST

XXX EXISTING SIGN MOVED TO NEW LOCATION

XXX NEW SIGN

SIGN MOUNTED ON SINGLE POST

SIGN MOUNTED ON MULTIPLE POSTS

SIGN MOUNTED ON OTHER POLE/OVERHEAD

ESTR EXISTING SIGN TO REMAIN

N

281
W1-2R
36"X36"

282
SPEED LIMIT 45
R2-1
36"X48"

283
W3-3
36"X36"

284
JCT
COUNTY H
J1-1
36"X57"

CTH S WB R/L

CTH S / 38TH ST

MATCHLINE STA 102+25.00

104'WB' 106'WB' 108'WB' 110'WB' 112'WB' 114'WB' 116

104'EB' 106'EB' 108'EB' 110'EB' 112'EB' 114'EB' 116

CTH S EB C/L

E E E E E

CHAIN LINK FENCE

WOOD FENCE

C

CHAIN LINK FENCE

W1-2R
36"X36"
285

SPEED LIMIT 45
R2-1
36"X48"
286

W3-3
36"X36"
287

JCT
COUNTY H
J1-1
36"X57"
288

SHEET 6 OF 6

PROJECT NO: RD16-003	HWY: CTH S	COUNTY: KENOSHA	PERMANENT SIGNING	SHEET 183	E

FILE NAME : T:\1165811\CIVIL3D\1165811\SHEETSPLAN\023201-PS.DWG
LAYOUT NAME - 6

PLOT DATE : 5/11/2020 2:09 PM PLOT BY : GUILLAMA, TINA PLOT NAME : PLOT SCALE : 1 IN:100 FT

WISDOT/CADDS SHEET 42

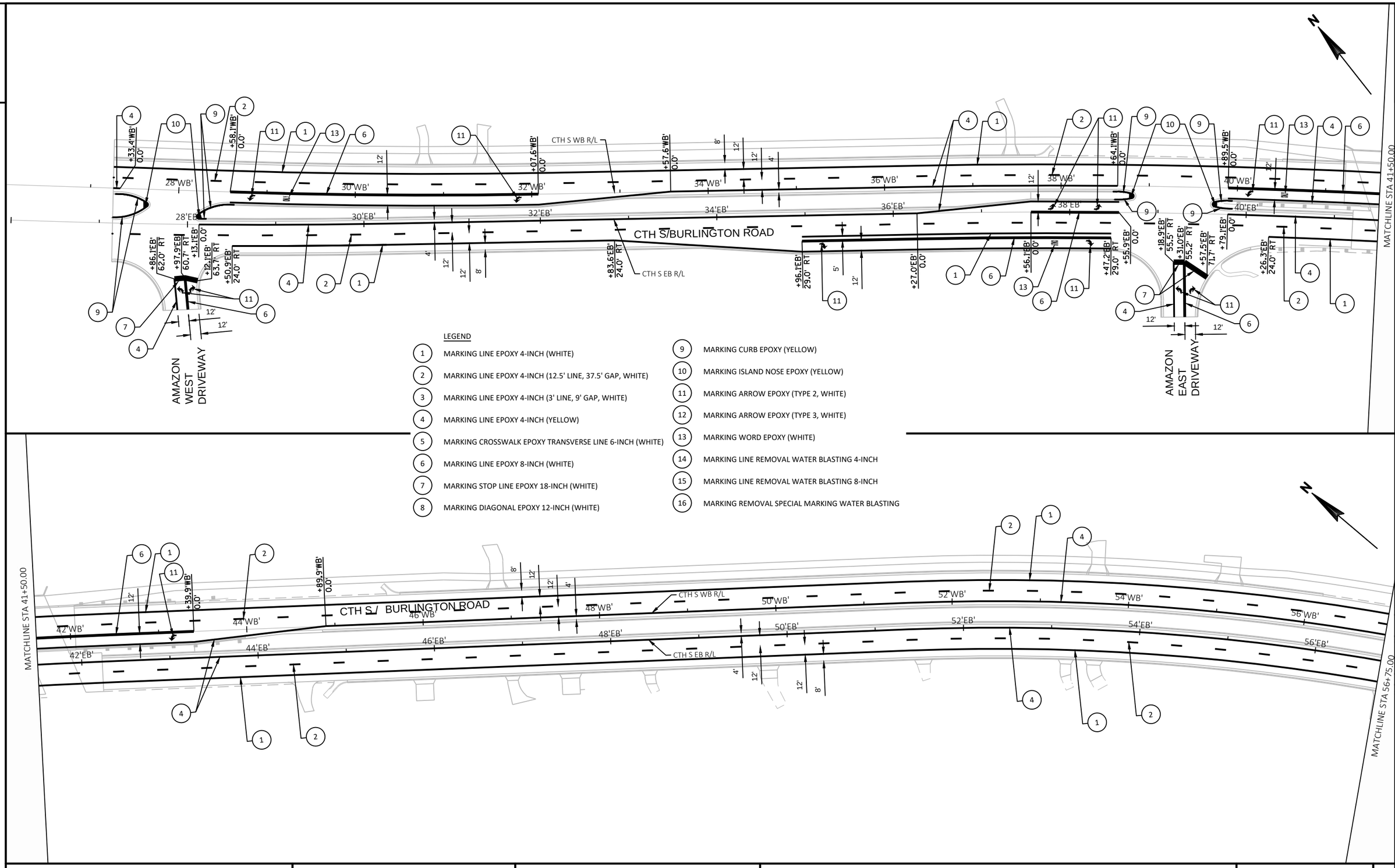

LEGEND

1. MARKING LINE EPOXY 4-INCH (WHITE)
2. MARKING LINE EPOXY 4-INCH (12.5' LINE, 37.5' GAP, WHITE)
3. MARKING LINE EPOXY 4-INCH (3' LINE, 9' GAP, WHITE)
4. MARKING LINE EPOXY 4-INCH (YELLOW)
5. MARKING CROSSWALK EPOXY TRANSVERSE LINE 6-INCH (WHITE)
6. MARKING LINE EPOXY 8-INCH (WHITE)
7. MARKING STOP LINE EPOXY 18-INCH (WHITE)
8. MARKING DIAGONAL EPOXY 12-INCH (WHITE)
9. MARKING CURB EPOXY (YELLOW)
10. MARKING ISLAND NOSE EPOXY (YELLOW)
11. MARKING ARROW EPOXY (TYPE 2, WHITE)
12. MARKING ARROW EPOXY (TYPE 3, WHITE)
13. MARKING WORD EPOXY (WHITE)
14. MARKING LINE REMOVAL WATER BLASTING 4-INCH
15. MARKING LINE REMOVAL WATER BLASTING 8-INCH
16. MARKING REMOVAL SPECIAL MARKING WATER BLASTING

PROJECT NO: RD16-003	HWY: CTH S	COUNTY: KENOSHA	PAVEMENT MARKING	SHEET 184	E

2

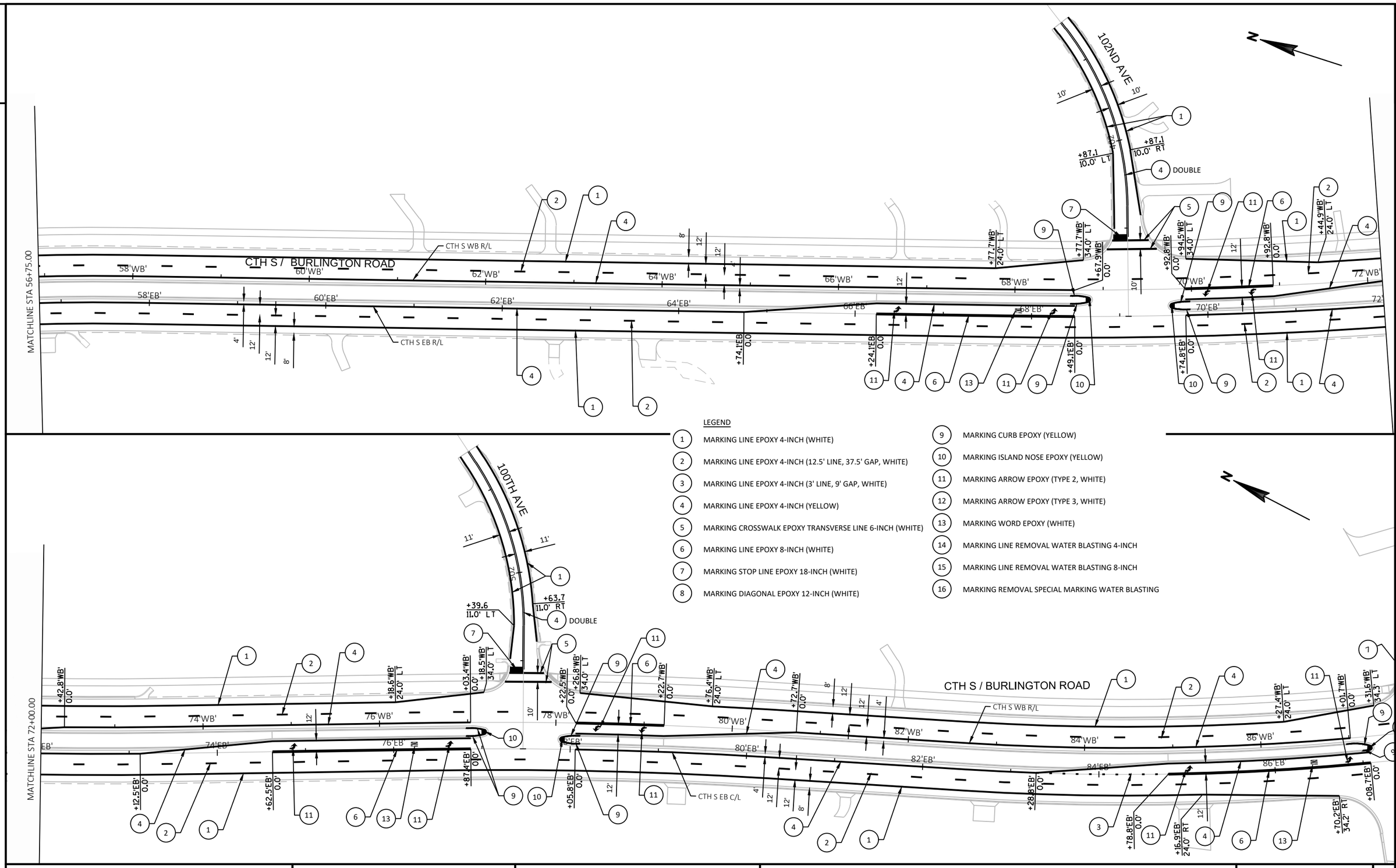

PROJECT NO: RD16-003	HWY: CTH S	COUNTY: KENOSHA	PAVEMENT MARKING	SHEET 185	E

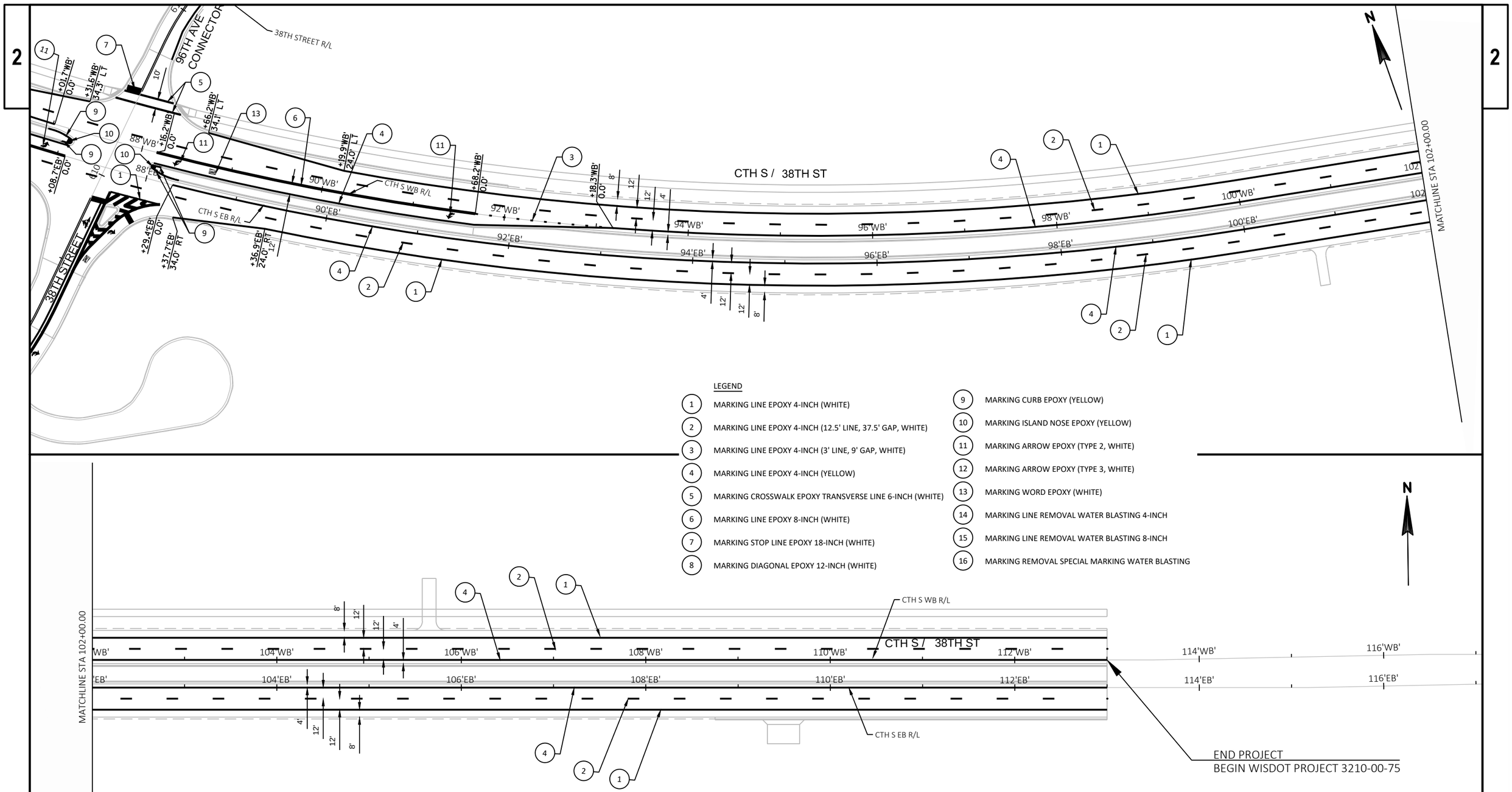

LEGEND

1. MARKING LINE EPOXY 4-INCH (WHITE)
2. MARKING LINE EPOXY 4-INCH (12.5' LINE, 37.5' GAP, WHITE)
3. MARKING LINE EPOXY 4-INCH (3' LINE, 9' GAP, WHITE)
4. MARKING LINE EPOXY 4-INCH (YELLOW)
5. MARKING CROSSWALK EPOXY TRANSVERSE LINE 6-INCH (WHITE)
6. MARKING LINE EPOXY 8-INCH (WHITE)
7. MARKING STOP LINE EPOXY 18-INCH (WHITE)
8. MARKING DIAGONAL EPOXY 12-INCH (WHITE)
9. MARKING CURB EPOXY (YELLOW)
10. MARKING ISLAND NOSE EPOXY (YELLOW)
11. MARKING ARROW EPOXY (TYPE 2, WHITE)
12. MARKING ARROW EPOXY (TYPE 3, WHITE)
13. MARKING WORD EPOXY (WHITE)
14. MARKING LINE REMOVAL WATER BLASTING 4-INCH
15. MARKING LINE REMOVAL WATER BLASTING 8-INCH
16. MARKING REMOVAL SPECIAL MARKING WATER BLASTING

PROJECT NO: RD16-003	HWY: CTH S	COUNTY: KENOSHA	PAVEMENT MARKING	SHEET 186	E

2

LEGEND

1. MARKING LINE EPOXY 4-INCH (WHITE)
2. MARKING LINE EPOXY 4-INCH (12.5' LINE, 37.5' GAP, WHITE)
3. MARKING LINE EPOXY 4-INCH (3' LINE, 9' GAP, WHITE)
4. MARKING LINE EPOXY 4-INCH (YELLOW)
5. MARKING CROSSWALK EPOXY TRANSVERSE LINE 6-INCH (WHITE)
6. MARKING LINE EPOXY 8-INCH (WHITE)
7. MARKING STOP LINE EPOXY 18-INCH (WHITE)
8. MARKING DIAGONAL EPOXY 12-INCH (WHITE)
9. MARKING CURB EPOXY (YELLOW)
10. MARKING ISLAND NOSE EPOXY (YELLOW)
11. MARKING ARROW EPOXY (TYPE 2, WHITE)
12. MARKING ARROW EPOXY (TYPE 3, WHITE)
13. MARKING WORD EPOXY (WHITE)
14. MARKING LINE REMOVAL WATER BLASTING 4-INCH
15. MARKING LINE REMOVAL WATER BLASTING 8-INCH
16. MARKING REMOVAL SPECIAL MARKING WATER BLASTING

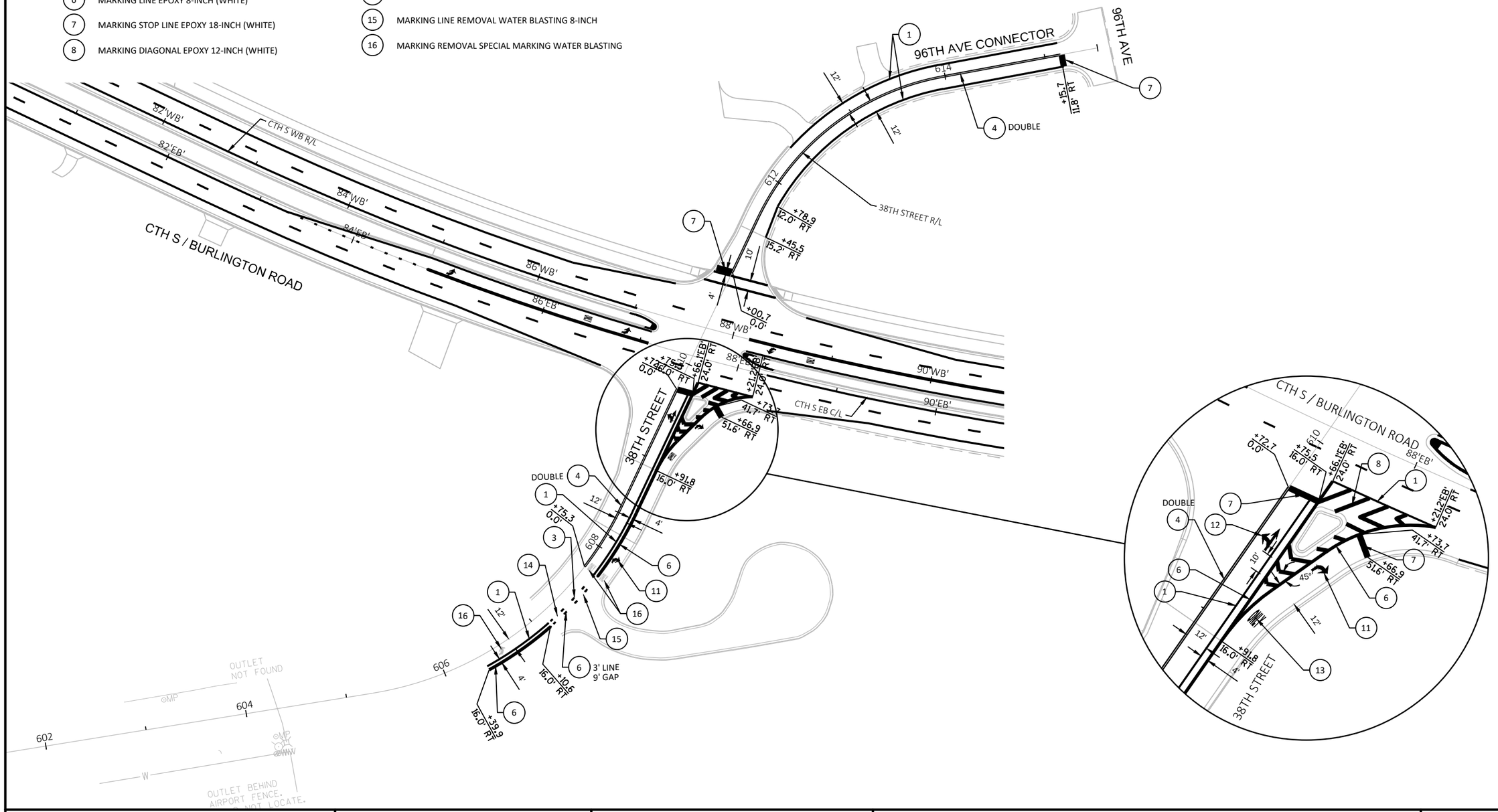

PROJECT NO: RD16-003	HWY: CTH S	COUNTY: KENOSHA	PAVEMENT MARKING	SHEET 187	E

FILE NAME : T:\1165811\CIVIL3D\1165811\SHEETSPLAN\024502-PM.DWG
LAYOUT NAME - 1

PLOT DATE : 5/11/2020 2:13 PM PLOT BY : GUILLAMA, TINA PLOT NAME : PLOT SCALE : 1 IN:100 FT

WISDOT/CADDS SHEET 44

2

LEGEND

- DIRECTION OF TRAFFIC
- WORK AREA
- ASPHALTIC SURFACE TEMPORARY
- ASPHALTIC SURFACE TEMPORARY (PREVIOUSLY PLACED)
- TYPE III BARRICADE
- TYPE III BARRICADE WITH ATTACHED SIGN
- TRAFFIC CONTROL DRUM
- SIGN ON PERMANENT SUPPORT
- SIGN ON TEMPORARY SUPPORT
- FLEXIBLE TUBULAR MARKER POST & BASE
- XXXXX MARKING REMOVAL
- TEMPORARY MARKING REMOVABLE MASK OUT TAPE
- MB PORTABLE CHANGEABLE MESSAGE BOARD
- T4W TEMPORARY MARKING LINE REMOVABLE TAPE 4-INCH (WHITE)
- T4Y TEMPORARY MARKING LINE REMOVABLE TAPE 4-INCH (YELLOW)
- T4Y-D TEMPORARY MARKING LINE REMOVABLE TAPE 4-INCH (DOUBLE YELLOW)
- P4W TEMPORARY MARKING LINE PAINT 4-INCH (WHITE)
- P4Y-D TEMPORARY MARKING LINE PAINT 4-INCH (DOUBLE YELLOW)
- T8W TEMPORARY MARKING LINE REMOVABLE TAPE 8-INCH (WHITE)
- TSL TEMPORARY MARKING STOP LINE REMOVABLE TAPE 18-INCH (WHITE)
- PSL TEMPORARY MARKING STOP LINE PAINT 18-INCH (WHITE)
- TARW TEMPORARY MARKING ARROW REMOVABLE TAPE (TYPE 2, WHITE)
- TWORD TEMPORARY MARKING WORD REMOVABLE TAPE (WHITE)
- PM PERMANENT MARKING

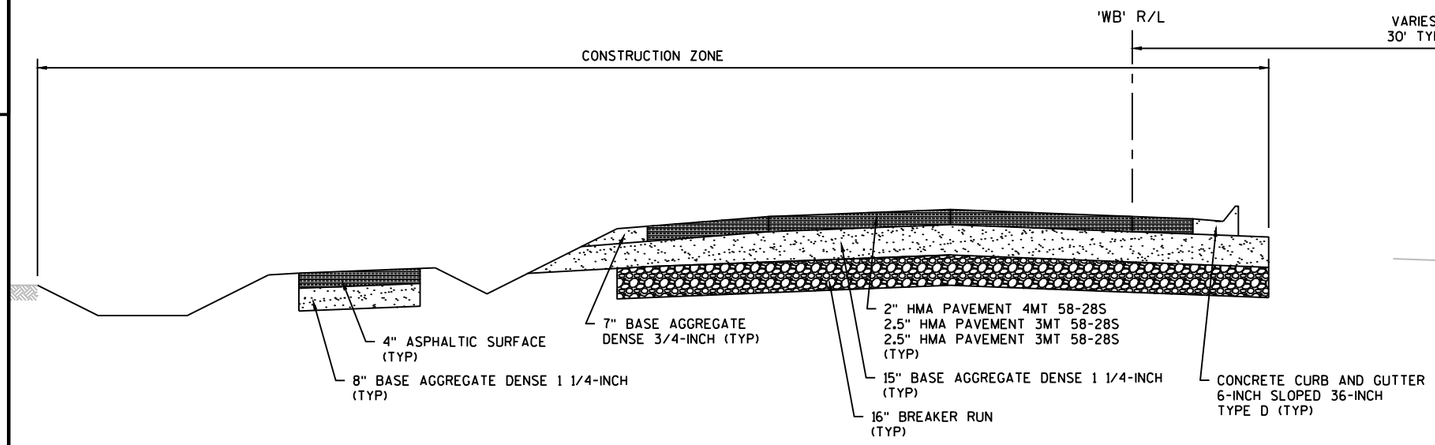

NEW ROADWAY

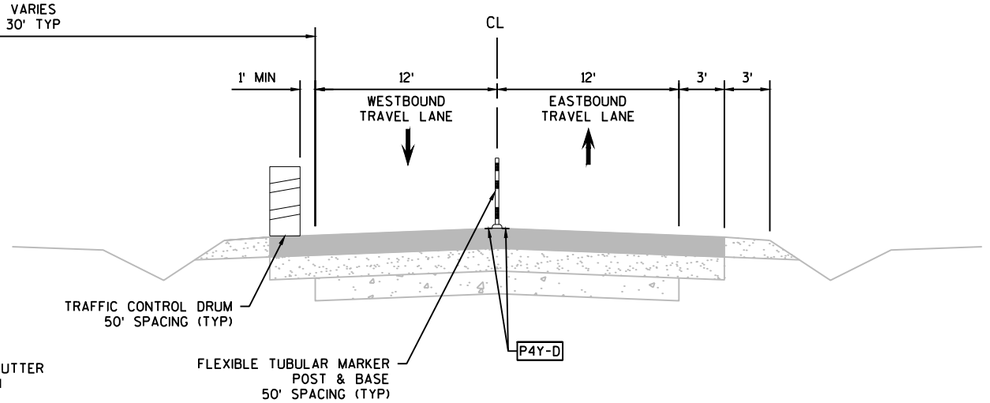

EXISTING ROADWAY

TRAFFIC CONTROL - STAGE 1
CTH S
38TH ST TO CTH H

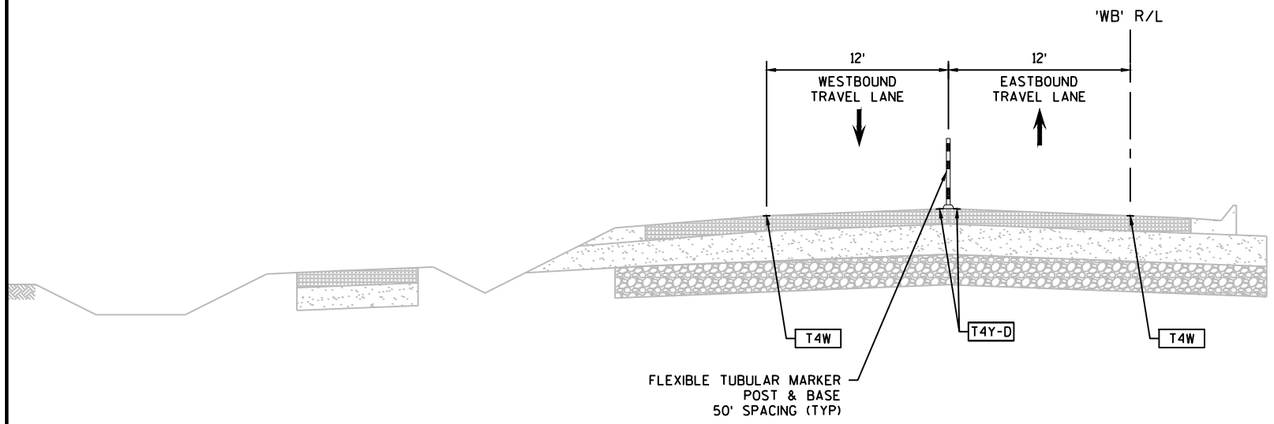

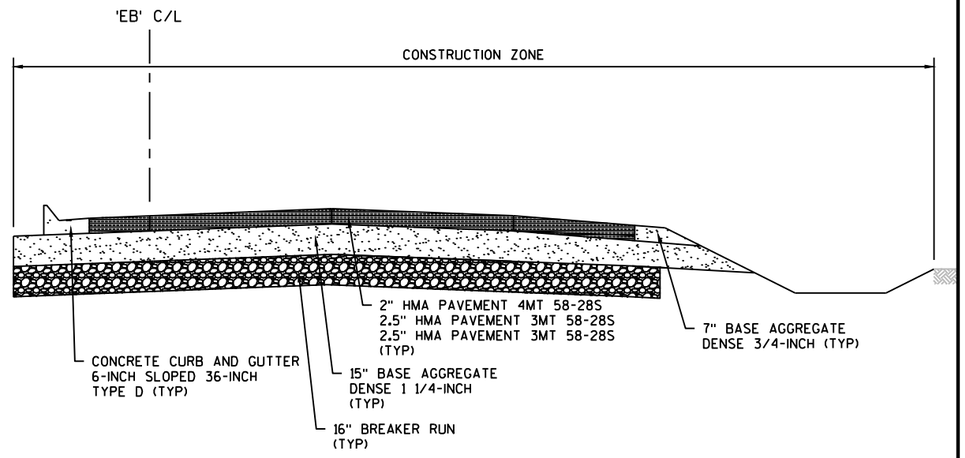

NEW ROADWAY

TRAFFIC CONTROL - STAGE 2
CTH S
38TH ST TO CTH H

PROJECT NO: RD16-003	HWY: CTH S	COUNTY: KENOSHA	TRAFFIC CONTROL - TYPICAL SECTIONS	SHEET 189	E

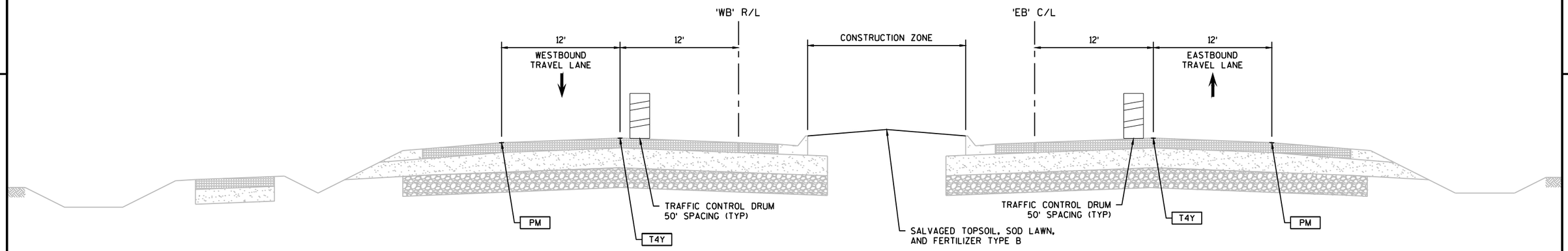

TRAFFIC CONTROL - STAGE 3
CTH S
38TH ST TO CTH H

2

2

N

96TH AVE CONNECTOR

CTH S / BURLINGTON RD

CTH S / 38TH ST

38TH STREET

96TH AVE

38TH STREET C/L

MAINTAIN LOCAL AND EMERGENCY ACCESS AT ALL TIMES THROUGH INTERSECTION

ROAD CLOSED
R11-2
48"X30"

ROAD CLOSED 500 FT
W20.3-D

W01-1L

CTH S WB R/L

CTH S EB C/L

END ROAD WORK
G20-2A
48"X24"

STA 608+20
END REMOVABLE TAPE
BEGIN PAINT

R3-2
24"X24"

W01-6
48"X24"

SPEED LIMIT 35
R2-1
24"X30"

W06-3

DO NOT PASS
R4-1
24"X30"

ROAD WORK AHEAD
W20-1-A

SPEED LIMIT 35
W03-5

ROAD WORK 500 FT
W20-1D

MB

500' 500' 500' 500' 500'

PROJECT NO: RD16-003	HWY: CTH S	COUNTY: KENOSHA	TRAFFIC CONTROL - STAGE 1A	SHEET 191	E

FILE NAME : T:\1165811\CIVIL3D\1165811\SHEETSPLAN\025001-TC.DWG
LAYOUT NAME - 1

PLOT DATE : 5/11/2020 2:18 PM PLOT BY : GUILLAMA, TINA PLOT NAME : PLOT SCALE : 1 IN:100 FT

WISDOT/CADDS SHEET 42

2

2

N

ROAD CLOSED AHEAD
W20-3A

R/L

CTH S WB R/L

98'WB' 100'WB' 102'WB' 104'WB' 106'WB' 108'WB' 110'WB' 112'WB'

98'EB' 100'EB' 102'EB' 104'EB' 106'EB' 108'EB' 110'EB' 112'EB'

12' 12'

P4Y-D

CTH S EB C/L

CTH S / 38TH STREET

50' TYP

MATCH WISDOT ID 3210-00-75
TRAFFIC CONTROL

PROJECT NO: RD16-003	HWY: CTH S	COUNTY: KENOSHA	TRAFFIC CONTROL - STAGE 1A	SHEET 192	E

FILE NAME : T:\1165811\CIVIL3D\1165811\SHEETSPLAN\025001-TC.DWG
LAYOUT NAME - 2

PLOT DATE : 5/11/2020 2:18 PM PLOT BY : GUILLAMA, TINA PLOT NAME : PLOT SCALE : 1 IN:100 FT

WISDOT/CADDS SHEET 42

2

2

N

96TH AVE CONNECTOR

614

ROAD CLOSED TO THRU TRAFFIC
R11-4
60"X30"

38TH STREET C/L

612

STOP
R1-1
30"X30"

ROAD CLOSED
R11-2
48"X30"

96TH AVE

W03-1

ONLY ONLY
R3-8F
36"X30"

ROAD CLOSED 500 FT
W20.3-D

CTH S / BURLINGTON RD

82'WB'
82'EB'
84'WB'
86'WB'
86'EB'
88'WB'
88'EB'
90'WB'
90'EB'
92'WB'
92'EB'
94'WB'
94'EB'
96'WB'
96'EB'
98'WB'
98'EB'

T4Y-D
T4W
P4W
PSL
TWORD
TARW

+75.2'WB'
6.3' RT

+73.1'WB'
18.4' RT

+98.3'WB'
23.0' RT

+57.6
27.1' RT

+33.7'EB'
55.8' RT

+66.9
18.5' RT

+42.3'EB'
82.2' RT

R60'

STA 610+40
END PAINT
BEGIN REMOVABLE TAPE

CTH S / 38TH ST

CTH S WB R/L

CTH S EB C/L

25' TYP

3' LINE
9' GAP

50' TYP

END ROAD WORK
G20-2A
48"X24"

500'

38TH STREET

604

606

608

12'

STOP
R1-1
30"X30"

WO1-7
48"X24"

STA 608+20
END REMOVABLE TAPE
BEGIN PAINT

R3-2
24"X24"

ROAD CLOSED
R11-2
48"X30"

SPEED LIMIT 35
R2-1
24"X30"

W06-3

DO NOT PASS
R4-1
24"X30"

ROAD WORK AHEAD
W20-1-A

SPEED LIMIT 35
WO3-5

SPEED LIMIT 35
R2-1
24"X30"

ROAD WORK 500 FT
W20-1D

MB

500' 500' 500' 500' 500'

PROJECT NO: RD16-003	HWY: CTH S	COUNTY: KENOSHA	TRAFFIC CONTROL - STAGE 1B	SHEET 193	E

FILE NAME : T:\1165811\CIVIL3D\1165811\SHEETSPLAN\025001-TC-1B.DWG
LAYOUT NAME - 1

PLOT DATE : 5/11/2020 2:22 PM PLOT BY : GUILLAMA, TINA PLOT NAME : PLOT SCALE : 1 IN:100 FT

WISDOT/CADDS SHEET 42

NOTES:
1. CONSTRUCT SE QUADRANT OF INTERSECTION DURING WEEKEND HOURS
2. SEE DETOUR PLAN FOR STAGE 2A DETOUR

N

96TH AVE CONNECTOR

614

612

38TH STREET C/L

WO1-7
48"X24"

ROAD CLOSED

R11-2
48"X30"

CTH S / BURLINGTON RD

84'WB'

84'EB'

86'WB'

86'EB'

STOP

R1-1
30"X30"

+83.3'WB'
60.7' LT

TSL

TARW

T8W

TWORD

TARW

88'WB'

88'EB'

+66.2'WB'
6.0' LT

90'WB'

90'EB'

+67.6'WB'
16.8' LT

+67.0'WB'
6.0' LT

92'WB'

92'EB'

+69.1'WB'
12.0' LT

94'WB'

94'EB'

96'WB'

96'EB'

98'WB'

98'EB'

ONLY ONLY

R3-8F
36"X30"

96TH AVE

WO3-1

ROAD CLOSED 500 FT

W20.3-D

T4W

T4Y-D

50'

CTH S WB R/L

12'

12'

CTH S EB C/L

END ROAD WORK

G20-2A
48"X24"

500'

25'

608

38TH STREET

38TH STREET C/L

606

604

R3-2
24"X24"

CTH S / 38TH ST

T4Y-D

T8W

T4Y

SPEED LIMIT 35

R2-1
24"X30"

WO6-3

DO NOT PASS

R4-1
24"X30"

PROJECT NO: RD16-003	HWY: CTH S	COUNTY: KENOSHA	TRAFFIC CONTROL - STAGE 2A	SHEET 194	E

FILE NAME : T:\1165811\CIVIL3D\1165811\SHEETSPLAN\025001-TC-2A.DWG
LAYOUT NAME - 1

PLOT DATE : 5/11/2020 2:26 PM PLOT BY : GUILLAMA, TINA PLOT NAME : PLOT SCALE : 1 IN:100 FT

WISDOT/CADDS SHEET 42

2

2

N

ROAD CLOSED AHEAD
W20-3A

R/L

T4W

CTH S WB R/L

T4Y-D

12'

12'

50' TYP

98'WB' 100'WB' 102'WB' 104'WB' 106'WB' 108'WB' 110'WB' 112'WB'

98'EB' 100'EB' 102'EB' 104'EB' 106'EB' 108'EB' 110'EB' 112'EB'

CTH S EB C/L

CTH S / 38TH STREET

MATCH WISDOT ID 3210-00-75
TRAFFIC CONTROL

PROJECT NO: RD16-003	HWY: CTH S	COUNTY: KENOSHA	TRAFFIC CONTROL - STAGE 2A	SHEET 195	E

FILE NAME : T:\1165811\CIVIL3D\1165811\SHEETSPLAN\025001-TC-2A.DWG
LAYOUT NAME - 2

PLOT DATE : 5/11/2020 2:26 PM PLOT BY : GUILLAMA, TINA PLOT NAME : PLOT SCALE : 1 IN:100 FT

WISDOT/CADDS SHEET 42

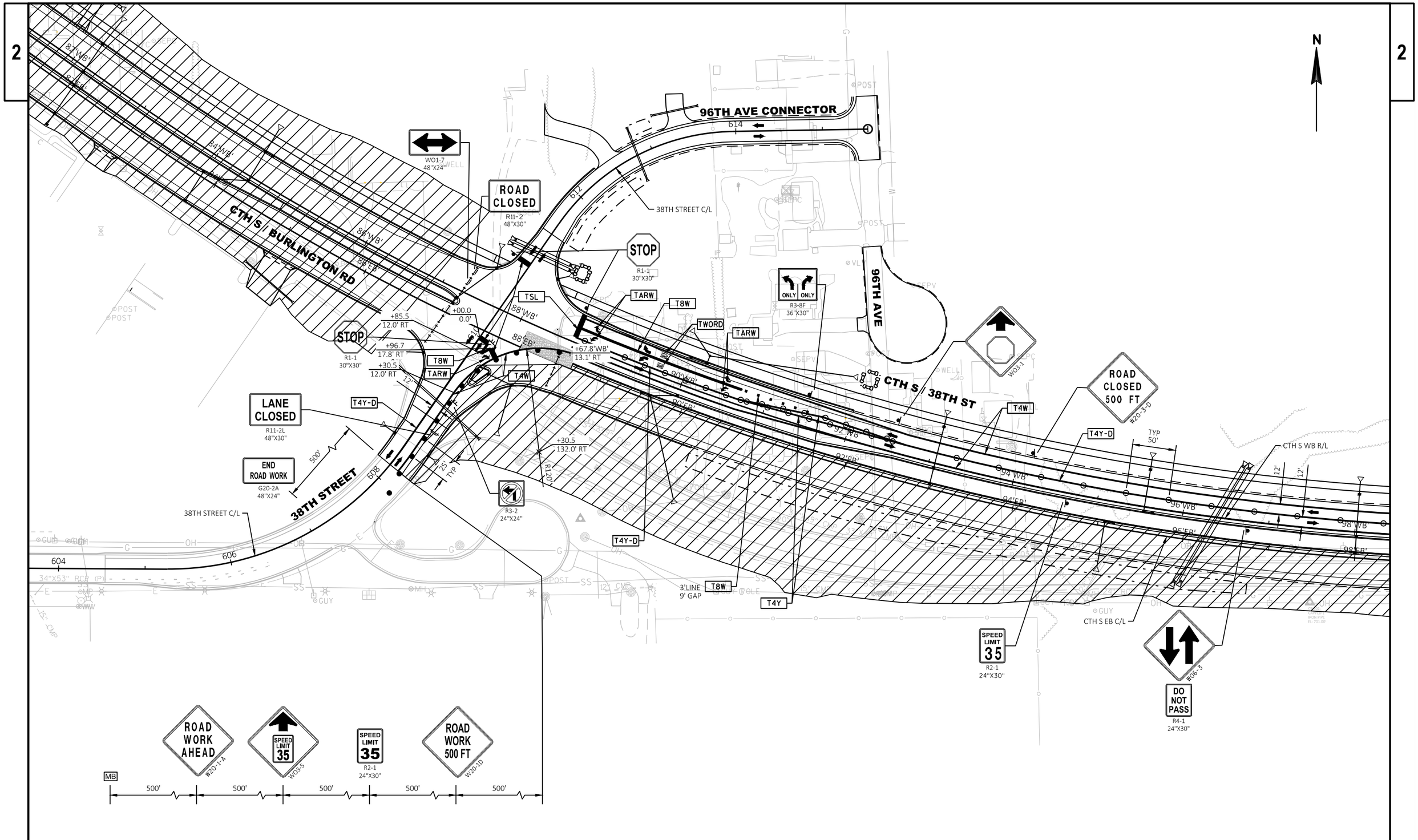

PROJECT NO: RD16-003	HWY: CTH S	COUNTY: KENOSHA	TRAFFIC CONTROL - STAGE 2B	SHEET 196	E

FILE NAME : T:\1165811\CIVIL3D\1165811\SHEETSPLAN\025001-TC-2B.DWG
LAYOUT NAME - 1
PLOT DATE : 5/11/2020 2:30 PM
PLOT BY : GUILLAMA, TINA
PLOT NAME :
PLOT SCALE : 1 IN:100 FT
WISDOT/CADDS SHEET 42

2

N

CTH S/ BURLINGTON RD

96TH AVE CONNECTOR

38TH STREET C/L

96TH AVE

38TH STREET

CTH S / 38TH ST

CTH S WB R/L

CTH S EB C/L

ROAD CLOSED
R11-2
48"X30"

STOP
R1-1
30"X30"

LANE CLOSED
R11-2L
48"X30"

BEGIN LEFT TURN LANE
R3-20L
24"X36"

ONLY ONLY
R3-8F
36"X30"

STA 92+69'WB', 24' LT
END T4W
BEGIN PM

ROAD CLOSED 500 FT
W20-3-D

END ROAD WORK
G20-2A
48"X24"

R3-2
24"X24"

SPEED LIMIT 35
R2-1
24"X30"

ROAD WORK AHEAD
W20-1-A

SPEED LIMIT 35
W03-5

ROAD WORK 500 FT
W20-1D

PROJECT NO: RD16-003	HWY: CTH S	COUNTY: KENOSHA	TRAFFIC CONTROL - STAGE 3	SHEET 197	E

FILE NAME : T:\1165811\CIVIL3D\1165811\SHEETSPLAN\025001-TC-3.DWG
LAYOUT NAME - 1
PLOT DATE : 5/11/2020 2:34 PM
PLOT BY : GUILLAMA, TINA
PLOT NAME :
PLOT SCALE : 1 IN:100 FT
WISDOT/CADDS SHEET 42

2

2

N

ROAD CLOSED AHEAD
W20-3A

LANE CLOSED
R11-2L
48"X30"

R/L

CTH S WB R/L

PM

T4Y

50'
TYP

LANE CLOSED
R11-2L
48"X30"

98'WB'
100'WB'
102'WB'
104'WB'
106'WB'
108'WB'
110'WB'
112'WB'

98'EB'
100'EB'
102'EB'
104'EB'
106'EB'
108'EB'
110'EB'
112'EB'

12'

CTH S / 38TH STREET

CTH S EB C/L

T4Y

PM

50'
TYP

LANE CLOSED
R11-2L
48"X30"

LANE CLOSED
R11-2L
48"X30"

MATCH WISDOT ID 3210-00-75
TRAFFIC CONTROL

OH
GUY
C
E

PROJECT NO: RD16-003	HWY: CTH S	COUNTY: KENOSHA	TRAFFIC CONTROL - STAGE 3	SHEET 198	E

FILE NAME : T:\1165811\CIVIL3D\1165811\SHEETSPLAN\025001-TC-3.DWG
LAYOUT NAME - 2

PLOT DATE : 5/11/2020 2:34 PM

PLOT BY : GUILLAMA, TINA

PLOT NAME :

PLOT SCALE : 1 IN:100 FT

WISDOT/CADDS SHEET 42

LEGEND

- TYPE III BARRICADE WITH ATTACHED SIGN
- SIGN ON PERMANENT SUPPORT
- WORK AREA
- DIRECTION OF TRAFFIC
- MB — PORTABLE CHANGEABLE MESSAGE BOARD
- DETOUR ROUTE

NOTES:

1. THE EXACT NUMBER, LOCATION, AND SPACING BETWEEN ALL SIGNS AND DEVICES SHALL BE ADJUSTED TO FIT FIELD CONDITIONS AS APPROVED BY THE ENGINEER.
2. ANY SIGNS, TEMPORARY OR EXISTING, WHICH CONFLICT WITH TRAFFIC CONTROL "IN USE" SHALL BE REMOVED OR COVERED AS NEEDED AND AS APPROVED BY THE ENGINEER.
3. SEE SDD BARRICADES AND SIGNS FOR VARIOUS MAINLINE CLOSURES, DETAIL D. STAGGER BARRICADES TO PROVIDE CONTRACTOR, LOCAL, AND EMERGENCY ACCESS AT ALL TIMES.

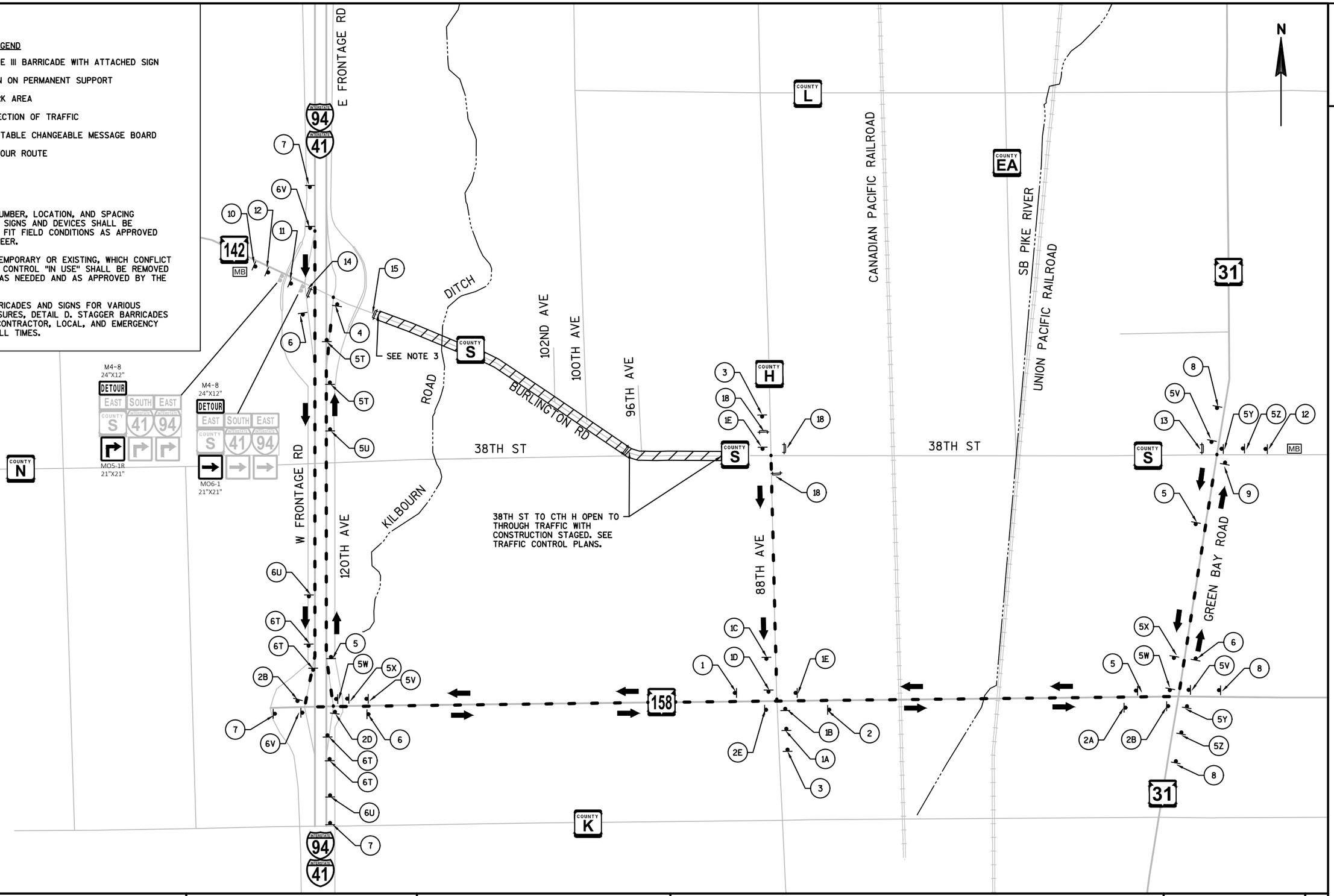

PROJECT NO: RD16-003	HWY: CTH S	COUNTY: KENOSHA	DETOUR - CTH S - STAGES 1, 2 & 3	SHEET 199	E

2

1
DETOUR
M4-8
24"X12"
WEST
M3-4
24"X12"
COUNTY S
M1-5A
24"X24"

2
DETOUR
M4-8
24"X12"
EAST
M3-2
24"X12"
COUNTY S
M1-5A
24"X24"

3
WEST
M3-4
24"X12"
COUNTY S
M1-5A
24"X24"
DETOUR AHEAD
W20-2-A

4
END DETOUR
M4-8A
24"X18"
WEST
M3-4
24"X12"
COUNTY S
M1-5A
24"X24"

A
MO5-1L
21"X21"

B
MO6-1
21"X21"

C
MO5-1R
21"X21"

D
MO6-1
21"X21"

E
MO6-1
21"X21"

F
DETOUR
M4-59R
30"X30"

G
DETOUR
M4-9L
30"X24"

H
DETOUR
M4-9R
30"X24"

J
END DETOUR
M4-8A
24"X18"

5
DETOUR
M4-8
36"X18"
WEST
M3-4
36"X18"
COUNTY S
M1-5A
36"X36"

6
DETOUR
M4-8
36"X18"
EAST
M3-2
36"X18"
COUNTY S
M1-5A
36"X36"

7
EAST
M3-2
36"X18"
COUNTY S
M1-5A
36"X36"
DETOUR AHEAD
W20-2-A

8
WEST
M3-4
36"X18"
COUNTY S
M1-5A
36"X36"
DETOUR AHEAD
W20-2-A

9
END DETOUR
M4-8A
30"X24"
EAST
M3-2
36"X18"
COUNTY S
M1-5A
36"X36"

10
ROAD CLOSED AHEAD
W20-3A

11
ROAD CLOSED 500 FT
W20-3D

12
DETOUR AHEAD
W20-2-A

13
ROAD CLOSED 2.5 MILES AHEAD LOCAL TRAFFIC ONLY
R11-3
60"X30"

14
ROAD CLOSED TO THRU TRAFFIC
R11-4
60"X30"

15
ROAD CLOSED
R11-2
48"X30"

18
ROAD CLOSED 0.6 MILES AHEAD LOCAL TRAFFIC ONLY
R11-3
60"X30"

Z
MO5-1L
30"X30"

Y
MO6-1
30"X30"

X
MO5-1R
30"X30"

W
MO6-1
30"X30"

V
MO6-1
30"X30"

U
MO5-2R
30"X30"

T
MO6-2
30"X30"

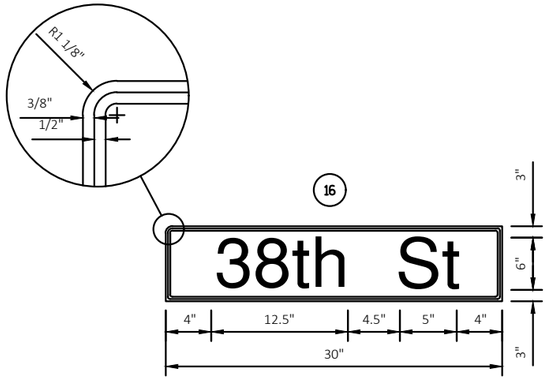

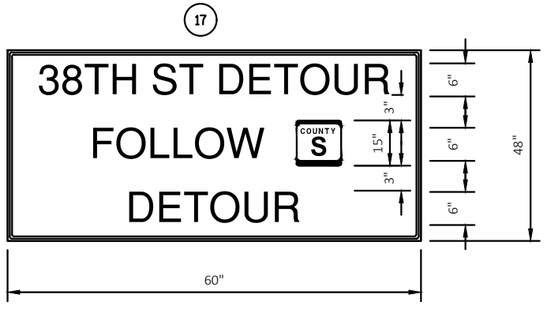

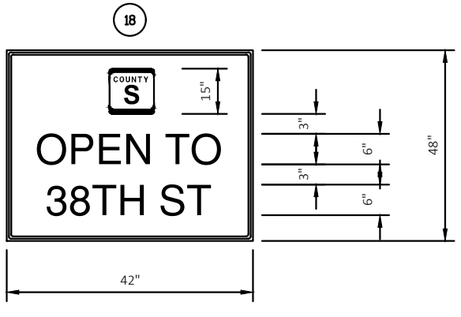

FIXED MESSAGE SIGN NOTES:
1. COLOR:
   BACKGROUND - ORANGE
   LETTERS AND BORDER - BLACK
2. FIXED MESSAGE TYPE II SIGNS - TYPE F REFLECTIVE
3. ALL LETTERS ARE SERIES C

PROJECT NO: RD16-003	HWY: CTH S	COUNTY: KENOSHA	DETOUR - SIGNING	SHEET 200	E

2

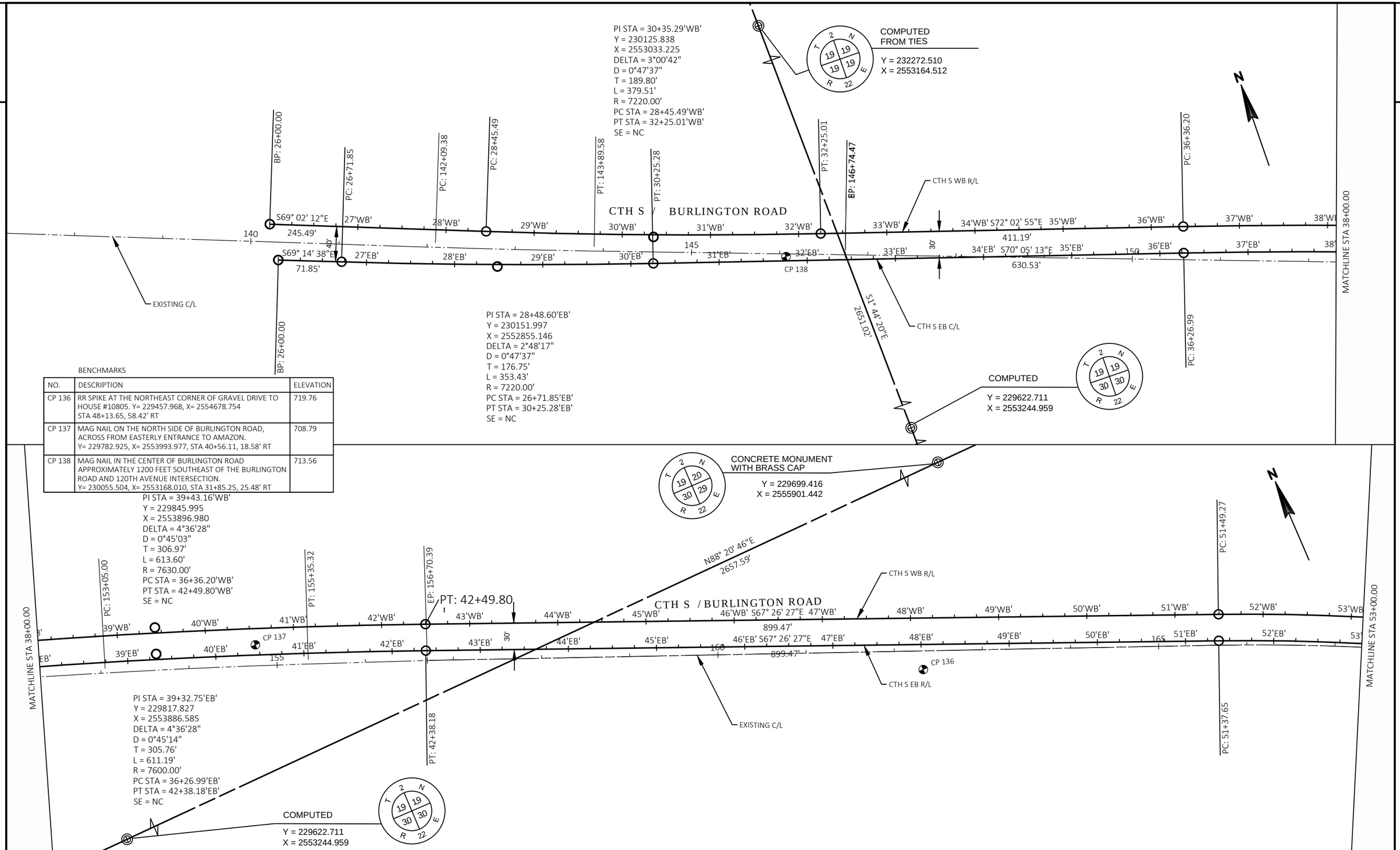

BENCHMARKS

NO.	DESCRIPTION	ELEVATION
CP 136	RR SPIKE AT THE NORTHEAST CORNER OF GRAVEL DRIVE TO HOUSE #10805. Y= 229457.968, X= 2554678.754 STA 48+13.65, 58.42' RT	719.76
CP 137	MAG NAIL ON THE NORTH SIDE OF BURLINGTON ROAD, ACROSS FROM EASTERLY ENTRANCE TO AMAZON. Y= 229782.925, X= 2553993.977, STA 40+56.11, 18.58' RT	708.79
CP 138	MAG NAIL IN THE CENTER OF BURLINGTON ROAD APPROXIMATELY 1200 FEET SOUTHEAST OF THE BURLINGTON ROAD AND 120TH AVENUE INTERSECTION. Y= 230055.504, X= 2553168.010, STA 31+85.25, 25.48' RT	713.56

PROJECT NO: RD16-003	HWY: CTH S	COUNTY: KENOSHA	ALIGNMENT PLAN	SHEET 201	E

2

PI STA = 54+73.82'WB'
Y = 229258.649
X = 2555310.823
DELTA = 14°26'02"
D = 2°14'08"
T = 324.55'
L = 645.66'
R = 2563.00'
PC STA = 51+49.27'WB'
PT STA = 57+94.94'WB'
SE = 2.9%

PT: 57+94.94

CONCRETE MONUMENT
WITH BRASS CAP
Y = 229699.416
X = 2555901.442

CTH S WB R/L

CTH S /BURLINGTON ROAD

MATCHLINE STA 53+00.00

54'WB' 55'WB' 56'WB' 57'WB' 58'WB' 59'WB' 60'WB' 61'WB' S53° 00' 25"E 62'WB' 63'WB' 64'WB' 65'WB' 66'WB' 67'WB'

CP 134

54'EB' 55'EB' 56'EB' 57'EB' 58'EB' 59'EB' 60'EB' 61'EB' S53° 00' 25"E 62'EB' 63'EB' 64'EB' 65'EB' 66'EB' 67'

170 175 30' 1001.60' 1001.60'

PI STA = 54+58.40'EB'
Y = 229232.402
X = 2555295.806
DELTA = 14°26'02"
D = 2°15'43"
T = 320.75'
L = 638.11'
R = 2533.00'
PC STA = 51+37.65'EB'
PT STA = 57+75.76'EB'
SE = 2.9%

PT: 57+75.76

EXISTING C/L

CTH S EB C/L

S2° 03' 46"E
2611.55'

Y = 227036.178
X = 2555997.368

MATCHLINE STA 67+00.00

2

BENCHMARKS

NO.	DESCRIPTION	ELEVATION
CP 130	MAG NAIL AT THE NORTHEAST CORNER OF THE 100TH AVENUE AND BURLINGTON ROAD INTERSECTION. Y= 227856.18, X= 2557319.365, STA 79+22.70, 1.46' RT	707.63
CP 133	8" SPIKE ON THE SOUTH SIDE OF BURLINGTON ROAD ACROSS FROM THE 102ND AVENUE AND BURLINGTON ROAD INTERSECTION. Y= 228263.189, X= 2556600.790 STA 70+98.14, 28.17' RT	707.06
CP 134	8" SPIKE ON THE NORTH SIDE OF BURLINGTON ROAD IN GRASS FIELD ENTRANCE, ACROSS FROM HOUSE #10525. Y= 229132.940, X=2555459.749, STA 56+64.54, 7.49' RT	726.26

158.57'
N1° 32' 50"W
14037
717.131
CP

404+00

PI STA = 402+37.17
Y = 228551.518
X = 2556596.570
DELTA = 37°00'23"
D = 17°06'12"
T = 112.11'
L = 216.37'
R = 335.00'
PC STA = 401+25.06
PT STA = 403+41.43
SE = NC

PT: 403+41.43

403+00

102ND AVENUE

402+00

102ND AVE R/L

PC: 401+25.06

PC: 67+96.54

401+00

N3° 27' 33"E
125.06'

EXISTING C/L

MATCHLINE STA 67+00.00

68'WB' 69'WB' 70'WB' 71'WB' 72'WB' 73'WB' 74'WB' S59° 36' 43"E 75'WB' 76'WB' 77'WB'

68'EB' 69'EB' 70'EB' 71'EB' 72'EB' 73'EB' 74'EB' S59° 36' 43"E 75'EB' 76'EB' 77'EB'

185 30' 293.56' 190 293.56'

CP 133

BP: 400+00.00

STA. 69+28.38'WB'= STA. 400+30.00

STA. 69+10.00'EB'= STA. 400+00.00

PI STA = 70+80.72'WB'
Y = 228289.684
X = 2556597.010
DELTA = 6°36'17"
D = 1°09'48"
T = 284.18'
L = 567.73'
R = 4925.00'
PC STA = 67+96.54'WB'
PT STA = 73+64.27'WB'
SE = 2.1%

PT: 73+64.27

PI STA = 70+63.27'EB'
Y = 228264.681
X = 2556580.341
DELTA = 6°36'17"
D = 1°09'23"
T = 285.91'
L = 571.19'
R = 4955.00'
PC STA = 67+77.36'EB'
PT STA = 73+48.55'EB'
SE = RC

PT: 73+48.55

PC: 67+77.36

CTH S EB C/L

CTH S WB R/L

PC: 76+57.83

PC: 76+42.10

EP: 505+00.00

N1° 53' 37"W
164.59'

504+00

PT: 503+35.41

503+00

PI STA = 502+40.38
Y = 228122.525
X = 2557295.661
DELTA = 33°29'28"
D = 17°06'12"
T = 100.79'
L = 195.82'
R = 335.00'
PC STA = 501+39.59
PT STA = 503+35.41
SE = NC

502+00

100TH AVE R/L

PC: 501+39.59

100TH AVENUE

N3° 35' 51"E
139.59'

501+00

BP: 500+00.00

STA. 77+62.88'WB'= STA. 500+30.00

STA. 77+46.53'EB'= STA. 500+00.00

PI STA = 78+50.90'WB'
Y = 227899.766
X = 2557261.923
DELTA = 4°27'46"
D = 1°09'23"
T = 193.07'
L = 385.95'
R = 4955.00'
PC STA = 76+57.83'WB'
PT STA = 80+43.77'WB'
SE = RC

PT: 80+43.77

CP 130

78'WB' 79'WB' 80'WB' 81'WB' S55° 08' 56

78'EB' 79'EB' 80'EB' S55° 08' 56"E 81'EB'

30' 223.79' 223.79' 195

PI STA = 78+34.01'EB'
Y = 227874.478
X = 2557245.739
DELTA = 4°27'46"
D = 1°09'48"
T = 191.90'
L = 383.61'
R = 4925.00'
PC STA = 76+42.10'EB'
PT STA = 80+25.72'EB'
SE = 2.1%

PT: 80+25.72

MATCHLINE STA 81+50.00

PROJECT NO: RD16-003	HWY: CTH S	COUNTY: KENOSHA	ALIGNMENT PLAN	SHEET 202	E

FILE NAME : T:\1165811\CIVIL3D\1165811\SHEETSPLAN\027201-AD.DWG
LAYOUT NAME - 10

PLOT DATE : 5/11/2020 2:36 PM PLOT BY : GUILLAMA, TINA PLOT NAME : PLOT SCALE : 1 IN:100 FT

WISDOT/CADDS SHEET 42

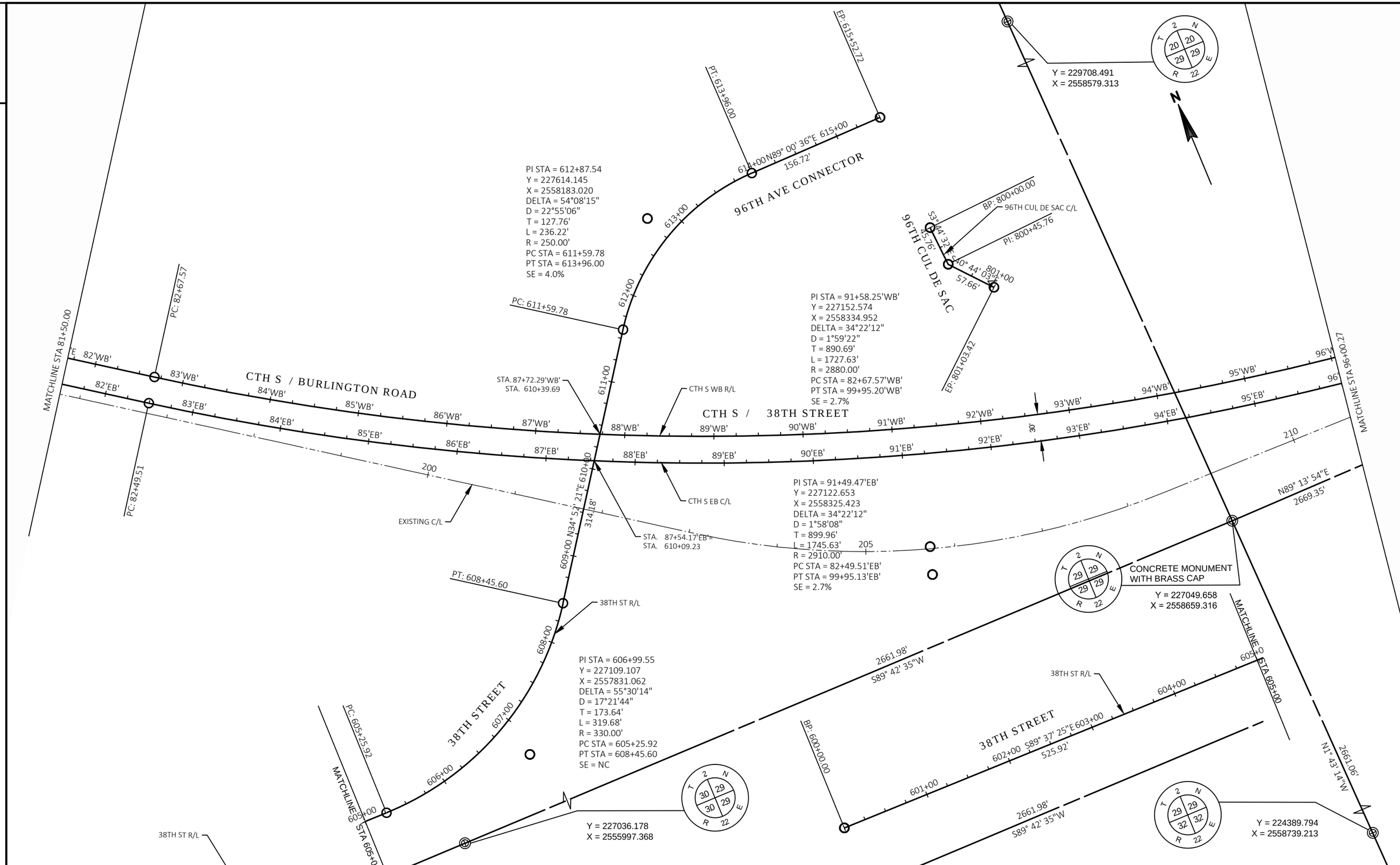

PROJECT NO: RD16-003	HWY:	COUNTY: KENOSHA	ALIGNMENT PLAN	SHEET 203	E

FILE NAME : T:\1165811\CIVIL3D\1165811\SHEETSPLAN\027201-AD.DWG
LAYOUT NAME - 12
PLOT DATE : 5/12/2020 1:15 PM
PLOT BY : GUILLAMA, TINA
PLOT NAME :
PLOT SCALE : 1 IN:100 FT
WISDOT/CADDS SHEET 42

2

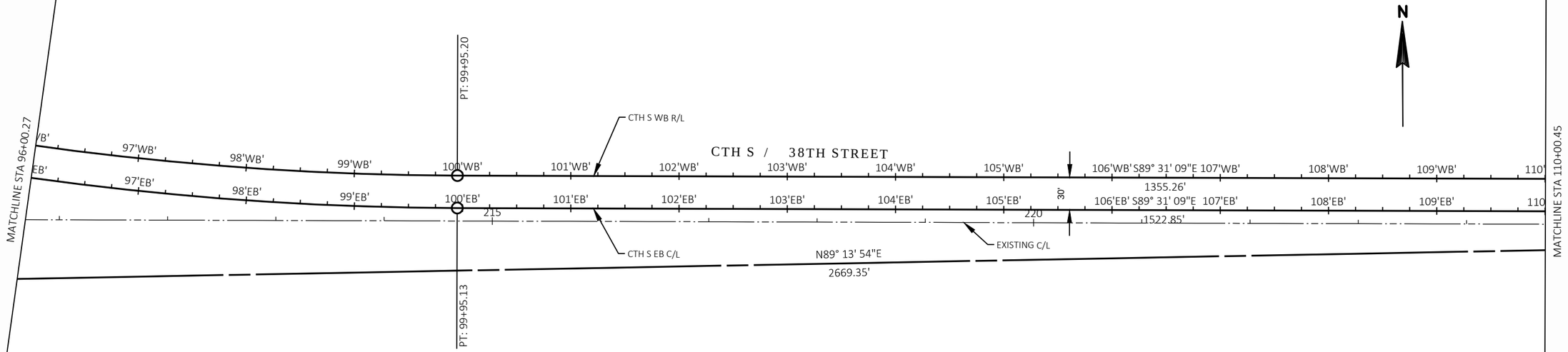

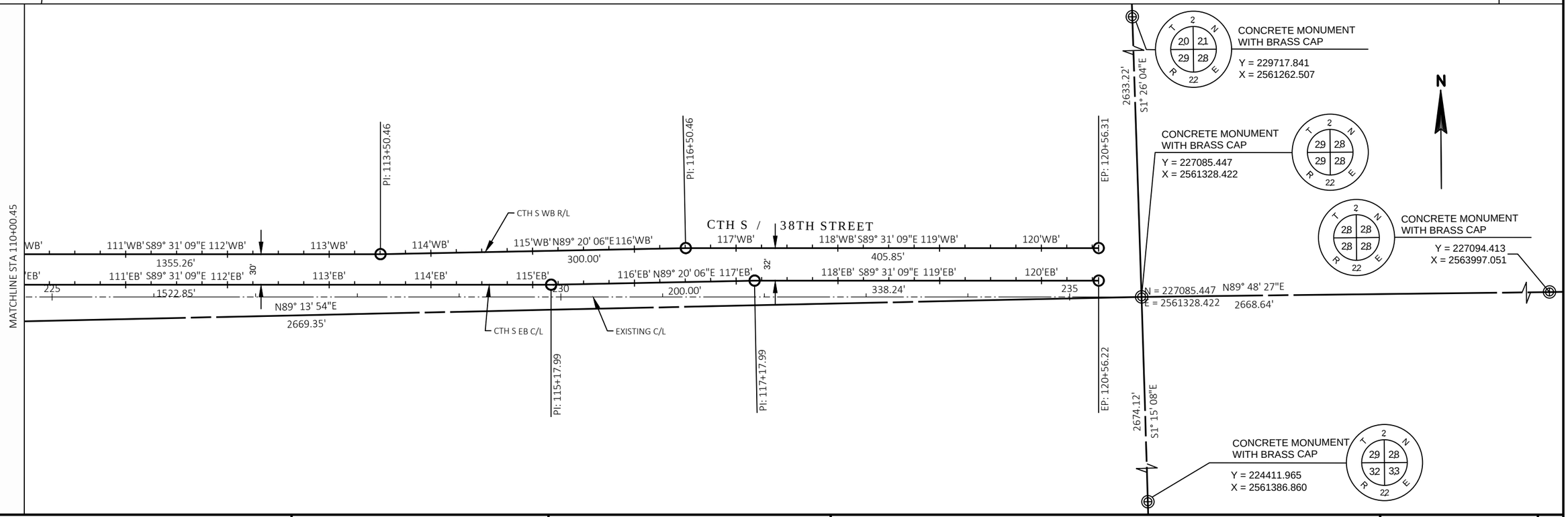

PROJECT NO: RD16-003	HWY: CTH S	COUNTY: KENOSHA	ALIGNMENT PLAN	SHEET 204	E

FILE NAME : T:\1165811\CIVIL3D\1165811\SHEETSPLAN\027201-AD.DWG
LAYOUT NAME - 14
PLOT DATE : 5/11/2020 2:36 PM
PLOT BY : GUILLAMA, TINA
PLOT NAME :
PLOT SCALE : 1 IN:100 FT
WISDOT/CADDS SHEET 42

REMOVALS

LOCATION	203.0100 REMOVING SMALL PIPE CULVERTS EACH	204.0100 REMOVING PAVEMENT SY	204.0115 REMOVING ASPHALTIC SURFACE BUTT JOINTS SY	204.0150 REMOVING CURB & GUTTER LF	204.0155 REMOVING CONCRETE SIDEWALK SY	204.0170 REMOVING FENCE LF	204.0220 REMOVING INLETS EACH	204.0245.06 REMOVING STORM SEWER 6-INCH LF	204.0245.08 REMOVING STORM SEWER 8-INCH LF	204.0245.10 REMOVING STORM SEWER 10-INCH LF	204.0245.12 REMOVING STORM SEWER 12-INCH LF	204.0245.18 REMOVING STORM SEWER 18-INCH LF	204.0245.33 REMOVING STORM SEWER 33X49-INCH LF
CTH S													
27+25 - 38+00	1	9,881	---	1,637	---	---	13	69	61	32	96	32	---
38+00 - 53+00	6	4,952	---	270	---	632	---	---	---	---	---	---	---
53+00 - 67+00	10	3,493	---	---	---	212	---	---	---	---	---	---	---
67+00 - 81+00	8	4,005	---	---	81	152	---	---	---	---	---	---	---
81+00 - 95+00	9	4,109	---	791	60	528	5	---	---	---	16	---	482
95+00 - 109+00	1	3,439	---	---	---	---	---	---	---	---	---	---	---
109+00 - 113+00	---	978	---	---	---	---	---	---	---	---	---	---	---
102ND AVE													
401+14 - 403+50	5	---	23	---	---	---	---	---	---	---	---	---	---
100TH AVE													
501+14 - 503+50	3	---	25	---	---	---	---	---	---	---	---	---	---
38TH ST / 96TH AVE CONNECTOR / 96TH AVE													
608+20 - 609+00	---	195	---	---	---	---	---	---	---	---	---	---	---
611+50 - 615+40	---	---	---	---	---	---	---	---	---	---	---	---	---
PROJECT TOTAL	**43**	**31,052**	**48**	**2,698**	**141**	**1,524**	**18**	**69**	**61**	**32**	**112**	**32**	**482**

CLEARING AND GRUBBING

LOCATION	201.0105 CLEARING STA	201.0120 CLEARING ID	201.0205 GRUBBING STA	201.0220 GRUBBING ID
CTH S				
27+25 - 38+00	3	---	3	---
38+00 - 53+00	6	22	6	22
53+00 - 67+00	12	---	12	---
67+00 - 81+00	9	14	9	14
81+00 - 95+00	13	---	13	---
95+00 - 109+00	6	---	6	---
109+00 - 113+00	1	---	1	---
102ND AVE				
401+14 - 403+50	1	---	1	---
100TH AVE				
501+14 - 503+50	3	---	3	---
38TH ST / 96TH AVE CONNECTOR / 96TH AVE				
608+20 - 609+00	---	---	---	---
611+50 - 615+40	3	8	3	8
700+00 - 701+74	1	---	1	---
PROJECT TOTAL	**58**	**44**	**58**	**44**

ALL ITEMS CATEGORY 0010 UNLESS NOTED

EARTHWORK SUMMARY			A	B	C	D	E	F	G	H	I	J
Division	**From/To Station**	**Location**	**205.0100 Common Excavation (CY) (1)**		**Contaminated Soil (CY) (4)**	**Salvaged/Unusable Pavement Material (CY)**	**Available Material (CY) (5)**	**Expanded EBS Backfill 311.0110 Breaker Run (Ton) (6)**	**Unexpanded Fill (CY)**	**Expanded Fill (CY) (7)**	**Mass Ordinate +/- (CY) (8)**	**Waste (CY) (9)**
			Cut (2)	**EBS Excavation (3)**				**Factor 1.80**		**Factor 1.30**		
Stage 1												
	27+25'WB' - 113+00'WB'	CTH S WB	45,083	0	0	16,590	28,493	0	13,980	18,174	10,319	10,319
	401+25 - 403+50	102nd Ave	599	0	0	0	599	0	2	3	597	597
	501+25 - 503+50	100th Ave	736	563	0	0	736	1,013	114	148	588	588
	608+20 - 609+00	38th St (South)	267	0	0	46	221	0	22	28	193	193
	UNDISTRIBUTED	EBS		500	0	0	0	900	0	0	0	500
Stage 1 Subtotal			46,686	1,063	0	16,636	30,050	1,913	14,118	18,353	11,697	12,197
Stage 2												
	27+15'EB' - 113+00'EB'	CTH S EB	38,848	1,739	0	610	38,238	3,130	12,024	15,632	22,607	24,346
	611+50 - 615+40	38th St (North)	1,435	0	0	0	1,435	0	92	120	1,315	1,315
	UNDISTRIBUTED	EBS		2,000	0	0	0	3,600	0	0	0	2,000
Stage 2 Subtotal			40,283	3,739	0	610	39,673	6,730	12,117	15,752	23,922	27,661
Grand Total			86,969	4,801	0	17,246	69,723	8,643	26,234	34,105	35,618	39,857
Total Common Exc			91,771									

Notes:

(1) Total Common Excavation is the sum of the Cut (A) and EBS (B) Excavation columns minus the Contaminated Soil (C) column. Item number 205.0100

(2) Salvaged/Unusable Pavement Material (D) is included in Cut (A). This assumes the existing pavement is salvaged or wasted by the contractor.

(3) EBS Excavation is Undistributed and to be used at the direction of the engineer and recommended areas shown on the plan, backfilled with and paid for as Breaker Run, Item 311.0110. It is assumed all EBS will be wasted.

(4) Contaminated Soil (C) quantities are included in the Cut (A) since they are part of the average end area calculations shown on the Earthwork Data Sheets. Additional location and bid item information is shown elsewhere.

(5) Available Material (E)= Cut (A) - Salvaged/Unusable Pavement Material (D) - Contaminated Soil (C).

(6) Expanded EBS Backfill (F) to be filled with Breaker Run, 1.8 Tons per CY. Additional quantities shown elsewhere. See "Subgrade & Base" table.

(7) Expanded Fill (H) = Unexpanded Fill (G) x Fill Factor (1.3)

(8) The Mass Ordinate (I) + or - Qty calculated for the roadway segment. Plus quantity indicates an excess of material within the roadway segment. Minus indicates a shortage of material within the roadway segment.

9) Waste (J) = EBS (B) + Mass Ordinate (I) and excludes salvaged/unusable pavement material (D) and Contaminated Soil (C).

ALL ITEMS CATEGORY 0010 UNLESS NOTED

3

BASE COURSE

LOCATION	* 305.0110 DENSE 3/4-INCH TON	** 305.0120 BASE AGGREGATE DENSE 1 1/4-INCH TON	** 310.0110 BASE AGGREGATE OPEN-GRADED TON	*** 311.0110 BREAKER RUN TON	612.0206 PIPE UNDERDRAIN UNPERFORATED 6-INCH LF	612.0406 PIPE UNDERDRAIN WRAPPED 6-INCH LF	612.0700 DRAIN TILE EXPLORATION LF	SPV.0060.03 DRAIN TILE CONNECTION EACH	612.0806 AEW FOR UNDERDRAIN REINFORCED CONCRETE 6-INCH EACH	624.0100 WATER (AGGREGATE COMPACTION) MGAL	624.0100 WATER (DUST CONTROL) MGAL
CTH S											
27+25 - 38+00	6	10,953	107	10,033	470	850	---	---	4	317	502
38+00 - 53+00	143	13,800	329	18,057	392	1,000	---	---	3	485	626
53+00 - 67+00	293	13,054	117	11,022	561	800	---	---	4	368	568
67+00 - 81+00	265	13,859	250	17,247	559	600	---	---	4	475	628
81+00 - 95+00	141	14,251	70	12,722	220	700	---	---	2	408	644
95+00 - 109+00	390	12,714	78	10,881	175	800	---	---	1	361	562
109+00 - 113+00	58	3,640	56	3,166	262	400	---	---	2	104	162
102ND AVE											
401+14 - 403+50	62	626	---	---	---	---	---	---	---	11	18
100TH AVE											
501+14 - 503+50	63	528	12	879	50	200	---	---	2	23	18
38TH ST / 96TH AVE CONNECTOR / 96TH AVE											
608+20 - 609+00	---	239	---	---	---	---	---	---	---	4	9
611+50 - 615+40	92	1,207	---	---	---	---	---	---	---	20	40
700+00 - 701+74	40	604	---	---	---	---	---	---	---		
UNDISTRIBUTED	---	---	---	---	---	---	10,000	10	---	---	---
SUBTOTAL	---	---	---	---	---	---	---	---	---	2,576	3,777
PROJECT TOTAL	**1,553**	**85,475**	**1,019**	**84,007**	**2,689**	**5,350**	**10,000**	**20**	**22**	**6,353**	

*ASSUMED UNIT WEIGHT OF 2.1 TON/CY.
**ASSUMED UNIT WEIGHT OF 2.0 TON/CY.
***ASSUMED UNIT WEIGHT OF 1.8 TON/CY.

ALL ITEMS CATEGORY 0010 UNLESS NOTED

3

HMA PAVEMENT

LOCATION	455.0605 TACK COAT GAL	460.5223 HMA PAVEMENT 3 LT 58-28 S TON	460.5224 HMA PAVEMENT 4 LT 58-28 S TON	460.6223 HMA PAVEMENT 3 MT 58-28 S TON	460.6224 HMA PAVEMENT 4 MT 58-28 S TON	465.0105 ASPHALTIC SURFACE TON	465.0120 ASPHALTIC SURFACE DRIVEWAYS & FIELD ENTRANCES TON	465.0125 ASPHALTIC SURFACE TEMPORARY TON	SPV.0090.02 ASPHALTIC CURB TEMPORARY LF	465.0315 ASPHALTIC FLUMES SY
CTH S										
27+25 - 38+00	1,526	---	---	2,925	1,170	221	14	---	---	14
38+00 - 53+00	1,889	---	---	3,621	1,448	318	42	---	---	61
53+00 - 67+00	1,700	---	---	3,259	1,303	289	65	---	---	20
67+00 - 81+00	1,939	---	---	3,716	1,486	252	4	---	---	23
81+00 - 95+00	1,965	---	---	3,766	1,507	258	15	135	---	---
95+00 - 109+00	1,677	---	---	3,214	1,286	283	22	---	---	20
109+00 - 113+00	481	---	---	921	368	82	---	---	---	---
102ND AVE										
401+14 - 403+50	67	116	77	---	---	---	67	---	---	---
100TH AVE										
501+14 - 503+50	70	121	81	---	---	---	7	---	---	9
38TH ST / 96TH AVE CONNECTOR / 96TH AVE										
608+20 - 609+00	36	62	41	---	---	---	---	---	---	---
611+50 - 615+40	153	263	175	---	---	---	54	---	---	---
700+00 - 701+74	817	1,409	939	---	---	---	4	---	---	---
UNDISTRIBUTED	---	---	---	---	---	---	---	865	500	---
PROJECT TOTAL	**12,319**	**1,971**	**1,314**	**21,422**	**8,569**	**1,704**	**295**	**1,000**	**500**	**146**

ALL ITEMS CATEGORY 0010 UNLESS NOTED

3

CONCRETE

LOCATION	415.0410 CONCRETE PAVEMENT APPROACH SLAB SY	416.0160 CONCRETE DRIVEWAY 6-INCH SY	416.0610 DRILLED TIE BARS EACH	601.0411 CONCRETE CURB & GUTTER 30-INCH TYPE D LF	601.0557 CONCRETE CURB & GUTTER 6-INCH SLOPED 36-INCH TYPE D LF	601.0588 CONCRETE CURB & GUTTER 4-INCH SLOPED 36-INCH TYPE TBT LF	602.0410 CONCRETE SIDEWALK 5-INCH SF	602.0605 CURB RAMP DETECTABLE WARNING FIELD RADIAL YELLOW SF	620.0300 CONCRETE MEDIAN SLOPED NOSE TYPE 1 SF
CTH S									
27+25 - 38+00	---	63	12	---	4,244	---	354	---	131
38+00 - 53+00	3,646	84	4	---	4,618	100	530	---	124
53+00 - 67+00	---	119	---	---	3,579	---	609	---	---
67+00 - 81+00	---	74	---	---	3,786	---	5,494	---	248
81+00 - 95+00	---	286	---	---	4,795	---	5,040	87	174
95+00 - 109+00	---	---	---	---	3,520	---	---	48	---
109+00 - 113+00	---	23	---	---	1,203	---	---	---	---
102ND AVE									
401+14 - 403+50	---	---	---	---	---	---	---	---	---
100TH AVE									
501+14 - 503+50	---	---	---	---	---	---	---	---	---
38TH ST / 96TH AVE CONNECTOR / 96TH AVE									
608+20 - 609+00	---	---	4	146	---	---	---	---	---
611+50 - 615+40	---	---	---	---	92	---	---	---	---
PROJECT TOTAL	**3,646**	**649**	**20**	**146**	**25,837**	**100**	**12,027**	**135**	**677**

ALL ITEMS CATEGORY 0010 UNLESS NOTED

PRIVATE ENTRANCE CULVERTS

* STATION	OFFSET	521.1012 APRON ENDWALLS FOR CULVERT PIPE STEEL 12-INCH EACH	521.1015 APRON ENDWALLS FOR CULVERT PIPE STEEL 15-INCH EACH	521.1018 APRON ENDWALLS FOR CULVERT PIPE STEEL 18-INCH EACH	521.1024 APRON ENDWALLS FOR CULVERT PIPE STEEL 24-INCH EACH	521.1030 APRON ENDWALLS FOR CULVERT PIPE STEEL 30-INCH EACH	521.1242 APRON ENDWALLS FOR PIPE ARCH STEEL 42"X29" LF	521.3112 CULVERT PIPE CORRUGATED STEEL 12-INCH LF	521.3115 CULVERT PIPE CORRUGATED STEEL 15-INCH LF	521.3118 CULVERT PIPE CORRUGATED STEEL 18-INCH LF	521.3124 CULVERT PIPE CORRUGATED STEEL 24-INCH LF	521.3130 CULVERT PIPE CORRUGATED STEEL 30-INCH LF	521.3742 PIPE ARCH CORRUGATED STEEL 42X29-INCH LF
CTH S													
37+37'WB'	82' LT	---	---	---	---	---	2	---	---	---	---	---	22
44+63'WB'	83' RT	2	---	---	---	---	---	39	---	---	---	---	---
60+37'WB'	84' RT	2	---	---	---	---	---	45	---	---	---	---	---
61+19'WB'	74' LT	---	---	2	---	---	---	---	---	54	---	---	---
62+67'WB'	79' LT	---	---	2	---	---	---	---	---	62	---	---	---
62+78'WB'	82' RT	2	---	---	---	---	---	18	---	---	---	---	---
63+87'WB'	80' RT	---	2	---	---	---	---	---	32	---	---	---	---
67+86'WB'	72' LT	---	---	---	2	---	---	---	---	---	59	---	---
81+33'WB'	78' RT	2	---	---	---	---	---	18	---	---	---	---	---
81+84'WB'	80' LT	---	---	---	---	2	---	---	---	---	---	56	---
85+25'WB'	92' RT	2	---	---	---	---	---	70	---	---	---	---	---
100+77'WB'	83' RT	---	---	2	---	---	---	---	---	34	---	---	---
105+63'WB'	73' LT	2	---	---	---	---	---	41	---	---	---	---	---
102ND AVE													
401+39	90' RT	---	---	2	---	---	---	---	---	30	---	---	---
401+55	32' LT	---	---	2	---	---	---	---	---	33	---	---	---
402+14	25' RT	---	---	2	---	---	---	---	---	33	---	---	---
100TH AVE													
503+04	25' LT	---	2	---	---	---	---	---	25	---	---	---	---
38TH ST / 96TH AVE CONNECTOR / 96TH AVE													
613+37	33' LT	2	---	---	---	---	---	52	---	---	---	---	---
PROJECT TOTAL		**14**	**4**	**12**	**2**	**2**	**2**	**283**	**57**	**246**	**59**	**56**	**22**

*STATIONING TO CENTER OF PIPE

ALL ITEMS CATEGORY 0010 UNLESS NOTED

3

CROSS CULVERTS & SIDE ROAD CULVERTS

	INLET			DISCHARGE				** 522.1015 APRON ENDWALLS FOR CULVERT PIPE REINFORCED CONCRETE 15-INCH	** 522.1018 APRON ENDWALLS FOR CULVERT PIPE REINFORCED CONCRETE 18-INCH	** 522.1030 APRON ENDWALLS FOR CULVERT PIPE REINFORCED CONCRETE 30-INCH	** 522.2624 APRON ENDWALLS FOR CULVERT PIPE REINFORCED CONCRETE HORIZONTAL ELLIPTICAL 24X38-INCH	522.2629 APRON ENDWALLS FOR CULVERT PIPE REINFORCED CONCRETE HORIZONTAL ELLIPTICAL 29X45-INCH	522.0115 CULVERT PIPE REINFORCED CONCRETE CLASS III 15-INCH	522.0418 CULVERT PIPE REINFORCED CONCRETE CLASS IV 18-INCH	522.0430 CULVERT PIPE REINFORCED CONCRETE CLASS IV 30-INCH	522.2424 CULVERT PIPE REINFORCED CONCRETE HORIZONTAL ELLIPTICAL CLASS HE-IV 24X38-INCH	522.2429 CULVERT PIPE REINFORCED CONCRETE HORIZONTAL ELLIPTICAL CLASS HE-IV 29X45-INCH	** 611.9800.S PIPE GRATES		* 633.5200 MARKERS CULVERT END	650.6000 CONSTRUCTION STAKING PIPE CULVERTS
	STATION	OFFSET	ELEV	STATION	OFFSET	ELEV	SLOPE %	EACH	EACH	EACH	EACH	EACH	LF	LF	LF	LF	LF	INLET EACH	DISCHARGE EACH	EACH	EACH
CTH S																					
	40+96'WB'	55.2' LT	703.00	41+42'WB'	71.5' RT	702.00	0.74%	---	---	---	2	---	---	---	---	135	---	---	1	2	1
	41+04'WB'	54.8' LT	703.00	41+50'WB'	71.8' RT	702.00	0.74%	---	---	---	2	---	---	---	---	135	---	---	1	2	1
	96+02'WB'	79.4' RT	696.30	96+62'WB'	61.2' LT	695.54	0.50%	---	---	---	---	2	---	---	---	---	153	1	---	2	1
	96+09'WB'	78' RT	696.28	96+69'WB'	59.8' LT	695.54	0.50%	---	---	---	---	2	---	---	---	---	150	1	---	2	1
100TH AVE																					
	501+08	26.3' LT	703.12	501+15	29.3' RT	702.75	0.66%	---	---	2	---	---	---	---	56	---	---	---	---	2	1
38TH ST / 96TH AVE CONNECTOR / 96TH AVE																					
	609+27	62.4' LT	699.11	609+58	78.8' RT	698.72	0.27%	---	2	---	---	---	---	125	---	---	---	---	---	2	1
	611+10	29.7' LT	698.20	611+23	40.3' RT	698.01	0.26%	---	---	---	2	---	---	---	---	71	---	---	---	2	1
	611+16	29.8' LT	698.20	611+28	37.6' RT	698.02	0.26%	---	---	---	2	---	---	---	---	68	---	---	---	2	1
	612+85	28.1' LT	699.43	612+79	25.8' RT	698.95	0.89%	2	---	---	---	---	54	---	---	---	---	---	---	2	1
PROJECT TOTAL								**2**	**2**	**2**	**8**	**4**	**54**	**125**	**56**	**409**	**303**	**4**		**18**	**9**

*ADDITIONAL QUANTITIES SHOWN ELSEWHERE. SEE "STORM SEWER PIPES" TABLES.
**ADDITIONAL QUANTITIES SHOWN ELSEWHERE. SEE "STORM SEWER STRUCTURES - APRON ENDWALLS" TABLES.

ALL ITEMS CATEGORY 0010 UNLESS NOTED

STORM SEWER STRUCTURES - APRON ENDWALLS

STRUCTURE NUMBER	STATION	ALIGNMENT	OFFSET	RIM ELEV	INVERT ELEV	STR DEPTH FEET	** 522.1012 APRON ENDWALLS FOR CULVERT PIPE REINFORCED CONCRETE 12-INCH EACH	** 522.1015 APRON ENDWALLS FOR CULVERT PIPE REINFORCED CONCRETE 15-INCH EACH	** 522.1018 APRON ENDWALLS FOR CULVERT PIPE REINFORCED CONCRETE 18-INCH EACH	522.1021 APRON ENDWALLS FOR CULVERT PIPE REINFORCED CONCRETE 21-INCH EACH	522.1024 APRON ENDWALLS FOR CULVERT PIPE REINFORCED CONCRETE 24-INCH EACH	** 522.1030 APRON ENDWALLS FOR CULVERT PIPE REINFORCED CONCRETE 30-INCH EACH	** 522.2624 APRON ENDWALLS FOR CULVERT PIPE REINFORCED CONCRETE HORIZONTAL ELLIPTICAL 24X38-INCH EACH	522.2643 APRON ENDWALLS FOR CULVERT PIPE REINFORCED CONCRETE HORIZONTAL ELLIPTICAL 43X68-INCH EACH	** 611.9800.S PIPE GRATES EACH	* 650.4000 CONSTRUCTION STAKING STORM SEWER EACH
20B	27+56.82	WB	26.1' RT	715.73	---	---	---	---	---	---	---	---	---	---	---	---
20D	27+57.43	WB	10.7' RT	715.73	---	---	---	---	---	---	---	---	---	---	---	---
20E	27+76.05	WB	5.5' RT	715.72	---	---	---	---	---	---	---	---	---	---	---	---
20F	27+79.22	WB	33.5' LT	715.47	---	---	---	---	---	---	---	---	---	---	---	---
20	27+78.29	WB	16.8' LT	715.94	---	---	---	---	---	---	---	---	---	---	---	---
21A	29+25.00	WB	13.5' RT	714.72	---	---	---	---	---	---	---	---	---	---	---	---
21B	29+78.77	WB	13.5' RT	714.42	---	---	---	---	---	---	---	---	---	---	---	---
21	29+78.89	WB	15.6' LT	714.83	---	---	---	---	---	---	---	---	---	---	---	---
11B	27+58.11	WB	89.7' RT	715.42	---	---	---	---	---	---	---	---	---	---	---	---
11C	27+74.75	WB	73.4' RT	715.67	---	---	---	---	---	---	---	---	---	---	---	---
11	27+73.99	WB	57.3' RT	715.97	---	---	---	---	---	---	---	---	---	---	---	---
12	29+81.45	WB	51.3' RT	714.8	---	---	---	---	---	---	---	---	---	---	---	---
22A	30+58.57	WB	33.5' LT	713.89	---	---	---	---	---	---	---	---	---	---	---	---
22B	30+58.86	WB	26.4' RT	714.15	---	---	---	---	---	---	---	---	---	---	---	---
22C	30+58.57	WB	13.5' RT	713.97	---	---	---	---	---	---	---	---	---	---	---	---
22	30+58.57	WB	8.7' LT	714.38	---	---	---	---	---	---	---	---	---	---	---	---
13A	30+77.30	WB	65.0' RT	713.8	---	---	---	---	---	---	---	---	---	---	---	---
13	30+76.98	WB	49.4' RT	714.25	---	---	---	---	---	---	---	---	---	---	---	---
23A	31+30.39	WB	69.5' LT	711.2	---	---	---	---	---	---	---	---	---	---	---	---
23B	32+10.84	WB	75.6' LT	---	---	---	1	---	---	---	---	---	---	---	---	1
23	31+80.57	WB	3.1' LT	713.58	---	---	---	---	---	---	---	---	---	---	---	---
24A	32+05.23	WB	43.1' LT	713.8	---	---	---	---	---	---	---	---	---	---	---	---
24	32+26.30	WB	26.6' LT	713.15	---	---	---	---	---	---	---	---	---	---	---	---
25	32+42.33	WB	65.4' LT	---	---	---	---	---	---	---	---	1	---	---	---	1
14	32+36.37	WB	48.6' RT	713.32	---	---	---	---	---	---	---	---	---	---	---	---
30A	33+80.83	WB	5.5' RT	712.3	---	---	---	---	---	---	---	---	---	---	---	---
30B	33+80.83	WB	33.5' LT	712.06	---	---	---	---	---	---	---	---	---	---	---	---
30C	33+80.83	WB	66.1' LT	---	---	---	---	1	---	---	---	---	---	---	---	1
15A	33+80.83	WB	24.5' RT	712.31	---	---	---	---	---	---	---	---	---	---	---	---
15B	33+70.83	WB	63.5' RT	712.29	---	---	---	---	---	---	---	---	---	---	---	---
15D	33+80.89	WB	59.5' RT	712.28	---	---	---	---	---	---	---	---	---	---	---	---
15	33+80.83	WB	50.0' RT	712.47	---	---	---	---	---	---	---	---	---	---	---	---
35A	36+78.09	WB	5.5' RT	710.61	---	---	---	---	---	---	---	---	---	---	---	---
35B	36+78.09	WB	33.5' LT	710.37	---	---	---	---	---	---	---	---	---	---	---	---
35C	36+78.09	WB	71.1' LT	---	---	---	---	---	1	---	---	---	---	---	---	1
16A	36+78.09	WB	24.5' RT	710.62	---	---	---	---	---	---	---	---	---	---	---	---
16B	36+09.21	WB	72.5' RT	710.75	---	---	---	---	---	---	---	---	---	---	---	---
16D	36+77.28	WB	84.7' RT	709.58	---	---	---	---	---	---	---	---	---	---	---	---
16C	36+77.17	WB	72.5' RT	710.37	---	---	---	---	---	---	---	---	---	---	---	---
16	36+78.09	WB	55.1' RT	710.68	---	---	---	---	---	---	---	---	---	---	---	---
17	37+79.16	WB	52.8' RT	710.16	---	---	---	---	---	---	---	---	---	---	---	---
40A	38+47.22	WB	72.5' RT	709.41	---	---	---	---	---	---	---	---	---	---	---	---
40B	38+57.32	WB	72.5' RT	709.35	---	---	---	---	---	---	---	---	---	---	---	---
40C	38+57.32	WB	16.5' RT	709.45	---	---	---	---	---	---	---	---	---	---	---	---
40D	38+57.32	WB	5.5' RT	709.59	---	---	---	---	---	---	---	---	---	---	---	---
40E	38+57.32	WB	43.6' LT	707.31	---	---	---	---	---	---	---	---	---	---	---	---
40F	38+57.32	WB	57.7' LT	---	---	---	---	---	1	---	---	---	---	---	---	1
45A	40+00.00	WB	43.8' LT	706.66	---	---	---	---	---	---	---	---	---	---	---	---
45B	40+00.00	WB	58.3' LT	---	---	---	1	---	---	---	---	---	---	---	---	1
50A	40+50.61	WB	24.5' RT	708.64	---	---	---	---	---	---	---	---	---	---	---	---
SUBTOTALS							**2**	**1**	**2**	**0**	**0**	**1**	**0**	**0**	**0**	**6**

1. STATIONS AND OFFSETS ARE TO THE CENTER OF STRUCTURES.
*ADDITIONAL QUANTITIES SHOWN ELSEWHERE. SEE "STORM SEWER STRUCTURES" TABLES.
**ADDITIONAL QUANTITIES SHOWN ELSEWHERE. SEE "CROSS CULVERTS & SIDE ROAD CULVERTS" TABLE.

ALL ITEMS CATEGORY 0010 UNLESS NOTED

STORM SEWER STRUCTURES - APRON ENDWALLS (cont.)

STRUCTURE NUMBER	STATION	ALIGNMENT	OFFSET	RIM ELEV	INVERT ELEV	STR DEPTH FEET	** 522.1012 APRON ENDWALLS FOR CULVERT PIPE REINFORCED CONCRETE 12-INCH EACH	** 522.1015 15-INCH EACH	** 522.1018 18-INCH EACH	522.1021 21-INCH EACH	522.1024 24-INCH EACH	** 522.1030 30-INCH EACH	** 522.2624 HORIZONTAL ELLIPTICAL 24X38-INCH EACH	522.2643 43X68-INCH EACH	** 611.9800.S PIPE GRATES EACH	* 650.4000 CONSTRUCTION STAKING STORM SEWER EACH
50B	40+62.90	WB	24.5' RT	708.59	---	---	---	---	---	---	---	---	---	---	---	---
50H	39+95.00	WB	13.5' RT	708.65	---	---	---	---	---	---	---	---	---	---	---	---
50C	40+53.06	WB	13.5' RT	708.49	---	---	---	---	---	---	---	---	---	---	---	---
50D	40+63.08	WB	13.5' RT	708.48	---	---	---	---	---	---	---	---	---	---	---	---
50E	40+73.03	WB	33.5' LT	708.41	---	---	---	---	---	---	---	---	---	---	---	---
50F	40+63.08	WB	33.5' LT	708.4	---	---	---	---	---	---	---	---	---	---	---	---
50G	40+63.08	WB	56.3' LT	---	---	---	---	---	1	---	---	---	---	---	---	1
55A	42+11.65	WB	13.5' RT	709.07	---	---	---	---	---	---	---	---	---	---	---	---
55B	42+11.65	WB	33.5' LT	708.99	---	---	---	---	---	---	---	---	---	---	---	---
55C	42+11.65	WB	59.6' LT	---	---	---	1	---	---	---	---	---	---	---	---	1
55D	42+40.10	WB	20.7' RT	708.96	---	---	---	---	---	---	---	---	---	---	---	---
55E	42+40.10	WB	74.8' RT	---	---	---	1	---	---	---	---	---	---	---	---	1
60A	43+25.00	WB	43.1' LT	707.26	---	---	---	---	---	---	---	---	---	---	---	---
60B	43+25.00	WB	58.7' LT	---	---	---	1	---	---	---	---	---	---	---	---	1
65A	45+00.00	WB	24.5' RT	711.8	---	---	---	---	---	---	---	---	---	---	---	---
65B	45+00.00	WB	5.5' RT	712.31	---	---	---	---	---	---	---	---	---	---	---	---
65C	45+00.00	WB	43.1' LT	709.71	---	---	---	---	---	---	---	---	---	---	---	---
65D	45+00.00	WB	58.0' LT	---	---	---	---	1	---	---	---	---	---	---	---	1
66A	47+11.62	WB	82.2' RT	715.79	---	---	---	---	---	---	---	---	---	---	---	---
66B	45+83.02	WB	83.2' RT	---	---	---	1	---	---	---	---	---	---	---	---	1
71A	48+00.00	WB	63.5' RT	719.78	---	---	---	---	---	---	---	---	---	---	---	---
71B	48+00.00	WB	24.5' RT	720.02	---	---	---	---	---	---	---	---	---	---	---	---
71C	48+00.00	WB	5.5' RT	720.52	---	---	---	---	---	---	---	---	---	---	---	---
71D	48+00.00	WB	33.5' LT	720.28	---	---	---	---	---	---	---	---	---	---	---	---
70A	48+62.50	WB	68.6' LT	---	---	---	---	1	---	---	---	---	---	---	---	1
70	48+62.50	WB	40.5' LT	722.71	---	---	---	---	---	---	---	---	---	---	---	---
71	48+00.00	WB	40.5' LT	720.92	---	---	---	---	---	---	---	---	---	---	---	---
72	46+53.44	WB	40.5' LT	716.68	---	---	---	---	---	---	---	---	---	---	---	---
72A	46+36.94	WB	59.2' LT	---	---	---	---	---	---	1	---	---	---	---	---	1
75A	50+91.62	WB	63.5' RT	727.26	---	---	---	---	---	---	---	---	---	---	---	---
75B	50+91.62	WB	24.5' RT	727.87	---	---	---	---	---	---	---	---	---	---	---	---
75C	50+91.62	WB	5.5' RT	728.1	---	---	---	---	---	---	---	---	---	---	---	---
75D	50+91.62	WB	33.5' LT	728.49	---	---	---	---	---	---	---	---	---	---	---	---
75E	50+85.70	WB	68.2' LT	---	---	---	---	1	---	---	---	---	---	---	---	1
80A	56+12.04	WB	63.5' RT	726.77	---	---	---	---	---	---	---	---	---	---	---	---
80B	56+12.04	WB	24.5' RT	727.90	---	---	---	---	---	---	---	---	---	---	---	---
80C	56+12.04	WB	5.5' RT	727.6	---	---	---	---	---	---	---	---	---	---	---	---
80D	56+12.04	WB	33.5' LT	728.65	---	---	---	---	---	---	---	---	---	---	---	---
80E	56+21.87	WB	68.0' LT	---	---	---	---	1	---	---	---	---	---	---	---	1
85A	59+19.18	WB	24.5' RT	720.98	---	---	---	---	---	---	---	---	---	---	---	---
85B	59+19.18	WB	5.5' RT	720.85	---	---	---	---	---	---	---	---	---	---	---	---
85C	59+19.18	WB	43.2' LT	718.4	---	---	---	---	---	---	---	---	---	---	---	---
85D	59+19.18	WB	58.8' LT	---	---	---	---	1	---	---	---	---	---	---	---	1
90A	60+81.00	WB	43.1' LT	715.46	---	---	---	---	---	---	---	---	---	---	---	---
90B	60+81.00	WB	60.6' LT	---	---	---	1	---	---	---	---	---	---	---	---	1
95A	62+19.18	WB	24.5' RT	714.25	---	---	---	---	---	---	---	---	---	---	---	---
95B	62+19.18	WB	5.5' RT	716.62	---	---	---	---	---	---	---	---	---	---	---	---
95C	62+50.00	WB	43.1' LT	713.72	---	---	---	---	---	---	---	---	---	---	---	---
95D	62+19.18	WB	43.1' LT	714.03	---	---	---	---	---	---	---	---	---	---	---	---
95E	62+19.18	WB	66.7' LT	---	---	---	1	---	---	---	---	---	---	---	---	1
SUBTOTALS							**6**	**5**	**1**	**1**	**0**	**0**	**0**	**0**	**0**	**13**

1. STATIONS AND OFFSETS ARE TO THE CENTER OF STRUCTURES.
*ADDITIONAL QUANTITIES SHOWN ELSEWHERE. SEE "STORM SEWER STRUCTURES" TABLES.
**ADDITIONAL QUANTITIES SHOWN ELSEWHERE. SEE "CROSS CULVERTS & SIDE ROAD CULVERTS" TABLE.

ALL ITEMS CATEGORY 0010 UNLESS NOTED

STORM SEWER STRUCTURES - APRON ENDWALLS (cont.)

STRUCTURE NUMBER	STATION	ALIGNMENT	OFFSET	RIM ELEV	INVERT ELEV	STR DEPTH FEET	** 522.1012 APRON ENDWALLS FOR CULVERT PIPE REINFORCED CONCRETE 12-INCH EACH	** 522.1015 APRON ENDWALLS FOR CULVERT PIPE REINFORCED CONCRETE 15-INCH EACH	** 522.1018 APRON ENDWALLS FOR CULVERT PIPE REINFORCED CONCRETE 18-INCH EACH	522.1021 APRON ENDWALLS FOR CULVERT PIPE REINFORCED CONCRETE 21-INCH EACH	522.1024 APRON ENDWALLS FOR CULVERT PIPE REINFORCED CONCRETE 24-INCH EACH	** 522.1030 APRON ENDWALLS FOR CULVERT PIPE REINFORCED CONCRETE 30-INCH EACH	** 522.2624 APRON ENDWALLS FOR CULVERT PIPE REINFORCED CONCRETE HORIZONTAL ELLIPTICAL 24X38-INCH EACH	522.2643 APRON ENDWALLS FOR CULVERT PIPE REINFORCED CONCRETE HORIZONTAL ELLIPTICAL 43X68-INCH EACH	** 611.9800.S PIPE GRATES EACH	* 650.4000 CONSTRUCTION STAKING STORM SEWER EACH
105A	64+33.83	WB	24.5' RT	711.73	---	---	---	---	---	---	---	---	---	---	---	---
105B	64+43.83	WB	24.5' RT	711.7	---	---	---	---	---	---	---	---	---	---	---	---
105C	64+43.83	WB	69.6' RT	---	---	---	1	---	---	---	---	---	---	---	---	1
110A	65+63.67	WB	59.9' LT	---	---	---	---	---	---	---	---	---	1	---	---	1
110B	65+63.67	WB	43.1' LT	711.25	---	---	---	---	---	---	---	---	---	---	---	---
110C	65+63.67	WB	5.5' RT	713.81	1.00	712.31	---	---	---	---	---	---	---	---	---	---
110D	65+63.67	WB	22.9' RT	712.32	---	---	---	---	---	---	---	---	---	---	1	---
110E	65+63.66	WB	73.1' RT	---	---	---	---	---	---	---	---	---	1	---	---	1
110F	65+53.67	WB	59.7' LT	---	---	---	---	---	---	---	---	---	1	---	---	1
110G	65+53.67	WB	5.5' RT	713.84	1.00	712.34	---	---	---	---	---	---	---	---	1	---
110H	65+53.67	WB	72.7' RT	---	---	---	---	---	---	---	---	---	1	---	---	1
125A	68+45.36	WB	59.7' LT	---	---	---	---	---	---	---	---	---	1	---	---	1
125B	68+98.42	WB	42.5' LT	712.56	---	---	---	---	---	---	---	---	---	---	---	---
125D	68+45.36	WB	43.2' LT	710.96	---	---	---	---	---	---	---	---	---	---	---	---
125E	68+45.36	WB	5.5' RT	714.25	1.00	712.75	---	---	---	---	---	---	---	---	---	---
125F	68+67.86	WB	16.5' RT	713.56	---	---	---	---	---	---	---	---	---	---	---	---
125G	68+45.36	WB	16.5' RT	713.63	---	---	---	---	---	---	---	---	---	---	---	---
125H	68+23.36	WB	77.8' RT	---	---	---	---	---	---	---	---	---	1	---	---	1
130A	71+50.05	WB	63.7' LT	---	---	---	---	---	---	---	1	---	---	---	---	1
130B	71+50.00	WB	33.5' LT	711.67	---	---	---	---	---	---	---	---	---	---	1	---
130C	71+50.04	WB	8.4' RT	712.63	---	---	---	---	---	---	---	---	---	---	---	---
130D	71+50.00	WB	24.5' RT	712.04	---	---	---	---	---	---	---	---	---	---	---	---
130E	71+49.85	WB	77.9' RT	---	---	---	---	---	---	---	1	---	---	---	---	1
132A	73+16.02	WB	24.5' RT	711.03	---	---	---	---	---	---	---	---	---	---	---	---
132B	73+16.02	WB	73.3' RT	---	---	---	1	---	---	---	---	---	---	---	---	1
135A	74+75.00	WB	58.1' LT	---	---	---	---	---	---	1	---	---	---	---	---	1
135B	74+75.00	WB	43.1' LT	707.99	---	---	---	---	---	---	---	---	---	---	---	---
135C	74+75.00	WB	5.5' RT	710.64	---	---	---	---	---	---	---	---	---	---	---	---
135D	74+75.00	WB	16.7' RT	709.91	---	---	---	---	---	---	---	---	---	---	---	---
135E	74+75.00	WB	71.6' RT	---	---	---	---	---	---	---	1	---	---	---	---	1
140A	75+37.00	WB	43.1' LT	707.69	---	---	---	---	---	---	---	---	---	---	---	---
140B	75+37.00	WB	56.8' LT	---	---	---	1	---	---	---	---	---	---	---	---	1
145A	77+15.80	WB	15.2' RT	708.97	---	---	---	---	---	---	---	---	---	---	---	---
145B	76+90.04	WB	16.5' RT	709.09	---	---	---	---	---	---	---	---	---	---	---	---
145C	76+90.04	WB	5.5' RT	709.44	---	---	---	---	---	---	---	---	---	---	---	---
145D	76+90.04	WB	42.8' LT	708.01	---	---	---	---	---	---	---	---	---	---	---	---
145E	76+90.04	WB	61.6' LT	---	---	---	1	---	---	---	---	---	---	---	---	1
150A	79+17.29	WB	63.5' RT	706.65	---	---	---	---	---	---	---	---	---	---	---	---
150B	79+17.29	WB	24.5' RT	707.56	---	---	---	---	---	---	---	---	---	---	---	---
150C	79+17.29	WB	13.5' RT	708.04	---	---	---	---	---	---	---	---	---	---	---	---
150D	79+17.29	WB	33.5' LT	708.92	---	---	---	---	---	---	---	---	---	---	---	---
150E	79+63.91	WB	74.4' LT	---	---	---	---	1	---	---	---	---	---	---	---	1
155A	82+18.06	WB	79.6' RT	704.08	---	---	---	---	---	---	---	---	---	---	---	---
155B	82+18.06	WB	63.5' RT	705.86	---	---	---	---	---	---	---	---	---	---	---	---
155C	82+18.06	WB	24.5' RT	705.42	---	---	---	---	---	---	---	---	---	---	---	---
155D	82+18.06	WB	5.5' RT	706.4	---	---	---	---	---	---	---	---	---	---	---	---
155E	82+18.06	WB	33.5' LT	705.83	---	---	---	---	---	---	---	---	---	---	---	---
155F	82+21.15	WB	67.4' LT	---	---	---	---	1	---	---	---	---	---	---	---	1
160A	83+97.10	WB	63.5' RT	705.28	---	---	---	---	---	---	---	---	---	---	---	---
160B	83+97.10	WB	23.5' RT	704.28	---	---	---	---	---	---	---	---	---	---	---	---
SUBTOTALS							**4**	**2**	**0**	**1**	**3**	**0**	**6**	**0**	**3**	**16**

1. STATIONS AND OFFSETS ARE TO THE CENTER OF STRUCTURES.
*ADDITIONAL QUANTITIES SHOWN ELSEWHERE. SEE "STORM SEWER STRUCTURES" TABLES.
**ADDITIONAL QUANTITIES SHOWN ELSEWHERE. SEE "CROSS CULVERTS & SIDE ROAD CULVERTS" TABLE.

ALL ITEMS CATEGORY 0010 UNLESS NOTED

STORM SEWER STRUCTURES - APRON ENDWALLS (cont.)

STRUCTURE NUMBER	STATION	ALIGNMENT	OFFSET	RIM ELEV	INVERT ELEV	STR DEPTH FEET	** 522.1012 APRON ENDWALLS FOR CULVERT PIPE REINFORCED CONCRETE 12-INCH EACH	** 522.1015 APRON ENDWALLS FOR CULVERT PIPE REINFORCED CONCRETE 15-INCH EACH	** 522.1018 APRON ENDWALLS FOR CULVERT PIPE REINFORCED CONCRETE 18-INCH EACH	** 522.1021 APRON ENDWALLS FOR CULVERT PIPE REINFORCED CONCRETE 21-INCH EACH	** 522.1024 APRON ENDWALLS FOR CULVERT PIPE REINFORCED CONCRETE 24-INCH EACH	** 522.1030 APRON ENDWALLS FOR CULVERT PIPE REINFORCED CONCRETE 30-INCH EACH	** 522.2624 APRON ENDWALLS FOR CULVERT PIPE REINFORCED CONCRETE HORIZONTAL ELLIPTICAL 24X38-INCH EACH	** 522.2643 APRON ENDWALLS FOR CULVERT PIPE REINFORCED CONCRETE HORIZONTAL ELLIPTICAL 43X68-INCH EACH	** 611.9800.S PIPE GRATES EACH	* 650.4000 CONSTRUCTION STAKING STORM SEWER EACH
160C	84+16.55	WB	21.8' RT	704.19	---	---	---	---	---	---	---	---	---	---	---	---
160D	84+45.97	WB	5.5' RT	704.47	---	---	---	---	---	---	---	---	---	---	---	---
160E	84+56.09	WB	33.5' LT	703.40	---	---	---	---	---	---	---	---	---	---	---	---
160F	84+45.97	WB	33.5' LT	703.38	---	---	---	---	---	---	---	---	---	---	---	---
160G	84+45.97	WB	63.3' LT	---	---	---	---	---	1	---	---	---	---	---	---	1
165A	87+15.29	WB	82.6' RT	704.29	---	---	---	---	---	---	---	---	---	---	---	---
165B	86+94.99	WB	92.1' RT	---	---	---	1	---	---	---	---	---	---	---	---	1
170A	87+20.57	WB	16.5' RT	704.12	---	---	---	---	---	---	---	---	---	---	---	---
170B	87+21.91	WB	9.2' RT	704.33	---	---	---	---	---	---	---	---	---	---	---	---
170C	87+49.49	WB	41.6' LT	703.1	---	---	---	---	---	---	---	---	---	---	---	---
170D	87+44.26	WB	64.3' LT	---	---	---	---	1	---	---	---	---	---	---	---	1
175A	88+19.91	WB	59.7' LT	702.66	---	---	---	---	---	---	---	---	---	---	---	---
175B	88+30.63	WB	67.4' LT	---	---	---	1	---	---	---	---	---	---	---	---	1
180A	87+91.59	WB	73.6' RT	704.55	---	---	---	---	---	---	---	---	---	---	---	---
180B	88+20.09	WB	74.2' RT	704.14	---	---	---	---	---	---	---	---	---	---	---	---
180C	88+27.37	WB	128.9' RT	---	---	---	1	---	---	---	---	---	---	---	---	1
185A	90+00.00	WB	13.5' RT	703	---	---	---	---	---	---	---	---	---	---	---	---
185B	89+70.75	WB	24.5' RT	703.14	---	---	---	---	---	---	---	---	---	---	---	---
185C	89+60.84	WB	24.5' RT	703.1	---	---	---	---	---	---	---	---	---	---	---	---
185D	89+60.84	WB	77.9' RT	---	---	---	---	1	---	---	---	---	---	---	---	1
190A	90+00.00	WB	33.5' LT	702.27	---	---	---	---	---	---	---	---	---	---	---	---
190B	90+19.86	WB	33.5' LT	702.21	---	---	---	---	---	---	---	---	---	---	---	---
190C	89+93.96	WB	61.1' LT	---	---	---	---	---	---	---	---	---	---	1	---	1
190	90+19.86	WB	42.5' LT	702.93	---	---	---	---	---	---	---	---	---	---	---	---
190D	91+88.07	WB	71.7' LT	---	---	---	---	---	---	---	---	---	---	1	---	1
195A	93+07.23	WB	24.5' RT	702.86	---	---	---	---	---	---	---	---	---	---	---	---
195B	93+07.23	WB	5.5' RT	703.5	---	---	---	---	---	---	---	---	---	---	---	---
195C	93+07.23	WB	43.7' LT	699.93	---	---	---	---	---	---	---	---	---	---	---	---
195D	93+07.23	WB	57.4' LT	---	---	---	1	---	---	---	---	---	---	---	---	1
200A	95+22.78	WB	24.5' RT	701.64	---	---	---	---	---	---	---	---	---	---	---	---
200B	95+12.86	WB	24.5' RT	701.61	---	---	---	---	---	---	---	---	---	---	---	---
200C	95+12.86	WB	77.3' RT	---	---	---	---	1	---	---	---	---	---	---	---	1
205A	95+64.93	WB	5.5' RT	702.27	---	---	---	---	---	---	---	---	---	---	---	---
205B	95+54.93	WB	5.5' RT	702.29	---	---	---	---	---	---	---	---	---	---	---	---
205C	95+54.93	WB	43.6' LT	698.75	---	---	---	---	---	---	---	---	---	---	---	---
205D	95+54.93	WB	57.6' LT	---	---	---	1	---	---	---	---	---	---	---	---	1
210A	98+02.07	WB	24.5' RT	703.28	---	---	---	---	---	---	---	---	---	---	---	---
210B	98+02.07	WB	5.5' RT	703.59	---	---	---	---	---	---	---	---	---	---	---	---
210C	98+02.07	WB	43.6' LT	700.02	---	---	---	---	---	---	---	---	---	---	---	---
210D	98+02.07	WB	58.3' LT	---	---	---	---	1	---	---	---	---	---	---	---	1
215A	101+00.06	WB	24.5' RT	705.22	---	---	---	---	---	---	---	---	---	---	---	---
215B	101+00.06	WB	5.5' RT	705.37	---	---	---	---	---	---	---	---	---	---	---	---
215C	101+00.06	WB	43.1' LT	702.65	---	---	---	---	---	---	---	---	---	---	---	---
215D	101+00.06	WB	58.6' LT	---	---	---	---	1	---	---	---	---	---	---	---	1
220A	104+00.06	WB	63.5' RT	706.9	---	---	---	---	---	---	---	---	---	---	---	---
220B	104+00.06	WB	24.5' RT	707.14	---	---	---	---	---	---	---	---	---	---	---	---
220C	104+00.06	WB	5.5' RT	707.30	---	---	---	---	---	---	---	---	---	---	---	---
220D	104+00.06	WB	43.1' LT	704.70	---	---	---	---	---	---	---	---	---	---	---	---
220E	104+00.06	WB	61.0' LT	---	---	---	---	1	---	---	---	---	---	---	---	1
221A	105+87.50	WB	43.1' LT	705.88	---	---	---	---	---	---	---	---	---	---	---	---
SUBTOTALS							**5**	**6**	**1**	**0**	**0**	**0**	**0**	**2**	**0**	**14**

1. STATIONS AND OFFSETS ARE TO THE CENTER OF STRUCTURES.
*ADDITIONAL QUANTITIES SHOWN ELSEWHERE. SEE "STORM SEWER STRUCTURES" TABLES.
**ADDITIONAL QUANTITIES SHOWN ELSEWHERE. SEE "CROSS CULVERTS & SIDE ROAD CULVERTS" TABLE.

ALL ITEMS CATEGORY 0010 UNLESS NOTED

3

STORM SEWER STRUCTURES - APRON ENDWALLS (cont.)

							**	**				**	**		**	*
							522.1012	522.1015	522.1018	522.1021	522.1024	522.1030	522.2624	522.2643	611.9800.S	650.4000
							APRON ENDWALLS FOR CULVERT PIPE REINFORCED CONCRETE						HORIZONTAL ELLIPTICAL		PIPE GRATES	CONSTRUCTION STAKING
STRUCTURE NUMBER	STATION	ALIGNMENT	OFFSET	RIM ELEV	INVERT ELEV	STR DEPTH FEET	12-INCH EACH	15-INCH EACH	18-INCH EACH	21-INCH EACH	24-INCH EACH	30-INCH EACH	24X38-INCH EACH	43X68-INCH EACH	EACH	STORM SEWER EACH
221B	105+87.63	WB	60.8' LT	---	---	---	1	---	---	---	---	---	---	---	---	1
225A	110+00.06	WB	63.5' RT	707.03	---	---	---	---	---	---	---	---	---	---	---	---
225B	110+00.06	WB	24.5' RT	707.27	---	---	---	---	---	---	---	---	---	---	---	---
225C	110+00.06	WB	5.5' RT	707.46	---	---	---	---	---	---	---	---	---	---	---	---
225D	110+00.06	WB	43.1' LT	704.86	---	---	---	---	---	---	---	---	---	---	---	---
225E	110+00.06	WB	61.1' LT	---	---	---	---	1	---	---	---	---	---	---	---	1
230A	112+95.06	WB	63.5' RT	703.07	---	---	---	---	---	---	---	---	---	---	---	---
230B	112+95.06	WB	24.5' RT	703.31	---	---	---	---	---	---	---	---	---	---	---	---
230C	112+95.06	WB	5.5' RT	703.45	---	---	---	---	---	---	---	---	---	---	---	---
230D	112+95.06	WB	43.1' LT	700.87	---	---	---	---	---	---	---	---	---	---	---	---
230E	112+95.06	WB	57.7' LT	---	---	---	---	1	---	---	---	---	---	---	---	1
600A	608+53.42	38TH	17.5' LT	704.58	---	---	---	---	---	---	---	---	---	---	---	---
600B	608+53.42	38TH	30.1' LT	---	---	---	1	---	---	---	---	---	---	---	---	1
605A	608+53.42	38TH	29.5' RT	704.34	---	---	---	---	---	---	---	---	---	---	---	---
605B	608+53.42	38TH	37.3' RT	---	---	---	1	---	---	---	---	---	---	---	---	1
SUBTOTALS							**3**	**2**	**0**	**0**	**0**	**0**	**0**	**0**	**0**	**5**
PROJECT TOTAL							**20**	**16**	**4**	**2**	**3**	**1**	**6**	**2**	**3**	**54**

1. STATIONS AND OFFSETS ARE TO THE CENTER OF STRUCTURES.
*ADDITIONAL QUANTITIES SHOWN ELSEWHERE. SEE "STORM SEWER STRUCTURES" TABLES.
**ADDITIONAL QUANTITIES SHOWN ELSEWHERE. SEE "CROSS CULVERTS & SIDE ROAD CULVERTS" TABLE.

ALL ITEMS CATEGORY 0010 UNLESS NOTED

STORM SEWER PIPES

FROM STR	TO STR	INLET ELEV	DISCH ELEV	SLOPE %	608.0315 STORM SEWER PIPE REINFORCED CONCRETE CLASS III 15-INCH LF	608.0412 CLASS IV 12-INCH LF	608.0415 CLASS IV 15-INCH LF	608.0418 CLASS IV 18-INCH LF	608.0421 CLASS IV 21-INCH LF	608.0424 CLASS IV 24-INCH LF	608.0430 CLASS IV 30-INCH LF	608.2343 HORIZONTAL ELLIPTICAL CLASS III-HE 43X68-INCH LF	608.2424 HORIZONTAL ELLIPTICAL CLASS IV-HE 24X38-INCH LF	* 633.5200 MARKERS CULVERT END EACH
20B	20D	711.56	711.40	1.00%	---	15.4	---	---	---	---	---	---	---	---
20D	20E	711.40	711.21	1.00%	---	19.3	---	---	---	---	---	---	---	---
20E	20	711.21	---	---	---	---	---	---	---	---	---	---	---	---
20F	20	---	---	---	---	---	---	---	---	---	---	---	---	---
20	21	---	---	---	---	---	---	---	---	---	---	---	---	---
21A	21B	710.55	710.01	1.00%	---	53.9	---	---	---	---	---	---	---	---
21B	21	710.01	---	1.08%	---	---	---	---	---	---	---	---	---	---
21	22	---	---	0.50%	---	---	---	---	---	---	---	---	---	---
11B	11C	711.23	---	0.40%	---	---	---	---	---	---	---	---	---	---
11C	11	711.14	---	0.00%	---	---	---	---	---	---	---	---	---	---
11	12	---	---	---	---	---	---	---	---	---	---	---	---	---
12	13	---	---	---	---	---	---	---	---	---	---	---	---	---
22A	22	709.72	709.60	0.50%	---	24.8	---	---	---	---	---	---	---	---
22B	22C	710.03	709.96	0.50%	---	12.9	---	---	---	---	---	---	---	---
22C	22	709.71	709.60	0.50%	---	---	22.2	---	---	---	---	---	---	---
22	23	---	---	---	---	---	---	---	---	---	---	---	---	---
13A	13	709.80	709.72	0.50%	---	15.7	---	---	---	---	---	---	---	---
13	14	---	---	---	---	---	---	---	---	---	---	---	---	---
23A	23B	709.16	708.76	0.50%	---	79.9	---	---	---	---	---	---	---	---
23B	OUTFALL	708.76	---	0.50%	---	---	---	---	---	---	---	---	---	1
23	24	---	---	---	---	---	---	---	---	---	---	---	---	---
24A	24	708.38	708.31	0.26%	---	26.7	---	---	---	---	---	---	---	---
24	25	708.31	708.14	0.40%	---	---	---	---	---	---	42.0	---	---	---
25	OUTFALL	708.14	---	0.40%	---	---	---	---	---	---	---	---	---	1
14	15	---	---	---	---	---	---	---	---	---	---	---	---	---
30A	30B	707.9	707.71	0.50%	---	39.0	---	---	---	---	---	---	---	---
30B	30C	707.46	707.3	0.50%	---	---	32.6	---	---	---	---	---	---	---
30C	OUTFALL	707.3	---	0.50%	---	---	---	---	---	---	---	---	---	1
15A	15	708.31	708.18	0.50%	---	25.5	---	---	---	---	---	---	---	---
15B	15D	708.29	708.24	0.50%	---	10.8	---	---	---	---	---	---	---	---
15D	15	707.74	707.69	0.50%	---	---	---	9.6	---	---	---	---	---	---
15	16	---	---	---	---	---	---	---	---	---	---	---	---	---
35A	35B	706	705.81	0.50%	---	39.0	---	---	---	---	---	---	---	---
35B	35C	705.56	705.37	0.50%	---	---	37.6	---	---	---	---	---	---	---
35C	OUTFALL	705.37	---	1.00%	---	---	---	---	---	---	---	---	---	1
16A	16	706.62	706.47	0.50%	---	30.6	---	---	---	---	---	---	---	---
16B	16C	706.6	706.26	0.50%	---	67.6	---	---	---	---	---	---	---	---
16D	16C	---	706.37	---	---	---	---	---	---	---	---	---	---	---
16C	16	706.01	705.92	0.50%	---	---	---	17.4	---	---	---	---	---	---
16	17	---	---	---	---	---	---	---	---	---	---	---	---	---
17	18	---	---	---	---	---	---	---	---	---	---	---	---	---
40A	40B	705.41	705.35	0.60%	---	10.0	---	---	---	---	---	---	---	---
40B	40C	705.35	705.07	0.50%	---	56.0	---	---	---	---	---	---	---	---
40C	40D	704.96	704.91	0.50%	---	---	11.0	---	---	---	---	---	---	---
40D	40E	704.91	704.66	0.50%	---	---	49.1	---	---	---	---	---	---	---
40E	40F	704.41	704.34	0.50%	---	---	---	14.1	---	---	---	---	---	---
40F	OUTFALL	704.34	---	0.50%	---	---	---	---	---	---	---	---	---	1
45A	45B	703.76	703.69	0.50%	---	14.5	---	---	---	---	---	---	---	---
45B	OUTFALL	703.69	---	0.50%	---	---	---	---	---	---	---	---	---	1
50A	50B	704.39	704.27	1.00%	---	12.2	---	---	---	---	---	---	---	---
SUBTOTALS					**0.0**	**553.8**	**152.5**	**41.1**	**0.0**	**0.0**	**42.0**	**0.0**	**0.0**	**6**

1. PIPE LENGTHS ARE FROM CENTER TO CENTER OF STRUCTURES.

*ADDITIONAL QUANTITIES SHOWN ELSEWHERE. SEE "CROSS CULVERTS & SIDE ROAD CULVERTS" TABLE.

ALL ITEMS CATEGORY 0010 UNLESS NOTED

STORM SEWER PIPES (cont.)

					608.0315	608.0412	608.0415	608.0418	608.0421	608.0424	608.0430	608.2343	608.2424	* 633.5200
					STORM SEWER PIPE REINFORCED CONCRETE									MARKERS
												HORIZONTAL ELLIPTICAL		CULVERT
					CLASS III	CLASS IV	CLASS IV	CLASS IV	CLASS IV	CLASS IV	CLASS IV	CLASS III-HE	CLASS IV-HE	END
FROM	TO	INLET	DISCH	SLOPE	15-INCH	12-INCH	15-INCH	18-INCH	21-INCH	24-INCH	30-INCH	43X68-INCH	24X38-INCH	
STR	STR	ELEV	ELEV	%	LF	LF	LF	LF	LF	LF	LF	LF	LF	EACH
50B	50D	704.27	704.21	0.50%	---	11.0	---	---	---	---	---	---	---	---
50H	50C	704.6	704.31	0.50%	---	58.0	---	---	---	---	---	---	---	---
50C	50D	704.31	704.21	1.00%	---	10.0	---	---	---	---	---	---	---	---
50D	50F	703.96	703.73	0.50%	---	---	47.0	---	---	---	---	---	---	---
50E	50F	704.08	703.98	1.00%	---	10.0	---	---	---	---	---	---	---	---
50F	50G	703.48	703.36	0.50%	---	---	---	22.8	---	---	---	---	---	---
50G	OUTFALL	703.36	---	0.50%	---	---	---	---	---	---	---	---	---	1
55A	55B	704.28	703.81	1.00%	---	47.0	---	---	---	---	---	---	---	---
55B	55C	703.81	703.55	1.00%	---	---	---	---	---	---	---	---	---	---
55C	OUTFALL	703.55	---	1.00%	---	---	---	---	---	---	---	---	---	1
55D	55E	704.63	704.09	1.00%	---	54.1	---	---	---	---	---	---	---	---
55E	OUTFALL	704.09	---	0.50%	---	---	---	---	---	---	---	---	---	1
60A	60B	704.58	704.5	0.50%	---	15.6	---	---	---	---	---	---	---	---
60B	OUTFALL	704.5	---	0.50%	---	---	---	---	---	---	---	---	---	1
65A	65B	707.66	707.57	0.50%	---	19.0	---	---	---	---	---	---	---	---
65B	65C	707.57	707.32	0.50%	---	48.6	---	---	---	---	---	---	---	---
65C	65D	707.07	707	0.50%	---	---	14.9	---	---	---	---	---	---	---
65D	OUTFALL	707	---	0.50%	---	---	---	---	---	---	---	---	---	1
66A	66B	712.68	710.84	1.50%	---	122.8	---	---	---	---	---	---	---	---
66B	OUTFALL	710.84	---	1.50%	---	---	---	---	---	---	---	---	---	1
71A	71B	715.82	715.62	0.50%	---	39.0	---	---	---	---	---	---	---	---
71B	71C	715.62	715.53	0.50%	---	19.0	---	---	---	---	---	---	---	---
71C	71D	715.28	715.08	0.50%	---	---	39.0	---	---	---	---	---	---	---
71D	71	715.08	715.05	0.50%	---	---	7.0	---	---	---	---	---	---	---
70A	70	716.52	715.95	2.00%	---	---	28.1	---	---	---	---	---	---	1
70	71	715.7	714.8	1.45%	---	---	---	62.5	---	---	---	---	---	---
71	72	714.55	712.51	1.39%	---	---	---	---	146.6	---	---	---	---	---
72	72A	712.51	712.26	1.00%	---	---	---	---	24.9	---	---	---	---	---
72A	OUTFALL	712.26	---	1.00%	---	---	---	---	---	---	---	---	---	1
75A	75B	722.66	722.46	0.50%	---	39.0	---	---	---	---	---	---	---	---
75B	75C	722.46	722.37	0.50%	---	19.0	---	---	---	---	---	---	---	---
75C	75D	722.12	721.92	0.50%	39.0	---	---	---	---	---	---	---	---	---
75D	75E	721.92	721.75	0.50%	35.2	---	---	---	---	---	---	---	---	---
75E	OUTFALL	721.75	---	0.50%	---	---	---	---	---	---	---	---	---	1
80A	80B	722.87	722.67	0.50%	---	39.0	---	---	---	---	---	---	---	---
80B	80C	722.67	722.58	0.50%	---	19.0	---	---	---	---	---	---	---	---
80C	80D	722.33	722.13	0.50%	39.0	---	---	---	---	---	---	---	---	---
80D	80E	722.13	721.95	0.50%	35.9	---	---	---	---	---	---	---	---	---
80E	OUTFALL	721.95	---	0.50%	---	---	---	---	---	---	---	---	---	1
85A	85B	716.18	716.08	0.50%	---	19.0	---	---	---	---	---	---	---	---
85B	85C	716.08	715.84	0.50%	---	48.7	---	---	---	---	---	---	---	---
85C	85D	715.59	715.51	0.50%	---	---	15.6	---	---	---	---	---	---	---
85D	OUTFALL	715.51	---	0.50%	---	---	---	---	---	---	---	---	---	1
90A	90B	712.96	712.87	0.50%	---	17.6	---	---	---	---	---	---	---	---
90B	OUTFALL	712.87	---	0.50%	---	---	---	---	---	---	---	---	---	1
95A	95B	710.25	710.16	0.50%	---	19.0	---	---	---	---	---	---	---	---
95B	95D	710.16	709.91	0.50%	---	48.6	---	---	---	---	---	---	---	---
95C	95D	711.55	711.24	1.00%	---	30.8	---	---	---	---	---	---	---	---
95D	95E	709.66	709.55	0.50%	---	---	23.6	---	---	---	---	---	---	---
95E	OUTFALL	709.55	---	0.50%	---	---	---	---	---	---	---	---	---	1
SUBTOTALS					**149.1**	**753.8**	**175.2**	**85.3**	**171.5**	**0.0**	**0.0**	**0.0**	**0.0**	**13**

1. PIPE LENGTHS ARE FROM CENTER TO CENTER OF STRUCTURES.

*ADDITIONAL QUANTITIES SHOWN ELSEWHERE. SEE "CROSS CULVERTS & SIDE ROAD CULVERTS" TABLE.

ALL ITEMS CATEGORY 0010 UNLESS NOTED

STORM SEWER PIPES (cont.)

					608.0315	608.0412	608.0415	608.0418	608.0421	608.0424	608.0430	608.2343	608.2424	* 633.5200
					STORM SEWER PIPE REINFORCED CONCRETE									MARKERS
												HORIZONTAL ELLIPTICAL		CULVERT
					CLASS III	CLASS IV	CLASS IV	CLASS IV	CLASS IV	CLASS IV	CLASS IV	CLASS III-HE	CLASS IV-HE	END
FROM	TO	INLET	DISCH	SLOPE	15-INCH	12-INCH	15-INCH	18-INCH	21-INCH	24-INCH	30-INCH	43X68-INCH	24X38-INCH	
STR	STR	ELEV	ELEV	%	LF	LF	LF	LF	LF	LF	LF	LF	LF	EACH
105A	105B	708.13	708.08	0.50%	---	10.0	---	---	---	---	---	---	---	---
105B	105C	708.08	707.85	0.50%	---	45.1	---	---	---	---	---	---	---	---
105C	OUTFALL	707.85	---	0.50%	---	---	---	---	---	---	---	---	---	1
110A	110B	708.18	708.04	0.83%	---	---	---	---	---	---	---	---	16.8	1
110B	110C	708.04	707.63	0.83%	---	---	---	---	---	---	---	---	48.6	---
110C	110D	707.63	707.49	0.83%	---	---	---	---	---	---	---	---	17.4	---
110D	110E	707.49	707.07	0.83%	---	---	---	---	---	---	---	---	50.3	---
110E	OUTFALL	707.07	---	0.83%	---	---	---	---	---	---	---	---	---	1
110F	110G	708.22	707.67	0.85%	---	---	---	---	---	---	---	---	65.2	1
110G	110H	707.67	707.1	0.85%	---	---	---	---	---	---	---	---	67.2	---
110H	OUTFALL	707.1	---	0.85%	---	---	---	---	---	---	---	---	---	1
125A	125D	707.92	707.85	0.44%	---	---	---	---	---	---	---	---	16.6	1
125B	125D	708.56	708.3	0.50%	---	52.6	---	---	---	---	---	---	---	---
125D	125E	707.85	707.64	0.44%	---	---	---	---	---	---	---	---	48.7	---
125E	125G	707.64	707.59	0.44%	---	---	---	---	---	---	---	---	11.0	---
125F	125G	709.04	708.59	2.00%	---	22.6	---	---	---	---	---	---	---	---
125G	125H	707.59	707.3	0.44%	---	---	---	---	---	---	---	---	65.2	---
125H	OUTFALL	707.3	---	0.44%	---	---	---	---	---	---	---	---	---	1
130A	130B	708.21	706.90	4.33%	---	---	---	---	---	30.2	---	---	---	1
130B	130C	706.90	706.27	1.50%	---	---	---	---	---	41.9	---	---	---	---
130C	130D	706.27	706.03	1.50%	---	---	---	---	---	16.1	---	---	---	---
130D	130E	706.03	705.23	1.50%	---	---	---	---	---	53.4	---	---	---	---
130E	OUTFALL	705.23	---	1.50%	---	---	---	---	---	---	---	---	---	1
132A	132B	706.7	706.21	1.00%	---	48.8	---	---	---	---	---	---	---	---
132B	OUTFALL	706.21	---	1.00%	---	---	---	---	---	---	---	---	---	1
135A	135B	704.94	704.87	0.50%	---	---	---	---	15.0	---	---	---	---	1
135B	135C	704.87	704.62	0.50%	---	---	---	---	48.6	---	---	---	---	---
135C	135D	704.62	704.57	0.50%	---	---	---	---	11.2	---	---	---	---	---
135D	135E	704.57	704.29	0.50%	---	---	---	---	---	54.8	---	---	---	---
135E	OUTFALL	704.29	---	0.50%	---	---	---	---	---	---	---	---	---	1
140A	140B	705.69	705.55	1.00%	---	13.7	---	---	---	---	---	---	---	---
140B	OUTFALL	705.55	---	1.00%	---	---	---	---	---	---	---	---	---	1
145A	145B	704.97	704.84	0.50%	---	---	---	---	---	---	---	---	---	---
145B	145C	704.84	704.78	0.50%	---	11.0	---	---	---	---	---	---	---	---
145C	145D	704.78	704.54	0.50%	---	48.3	---	---	---	---	---	---	---	---
145D	145E	704.54	704.45	0.50%	---	---	---	---	---	---	---	---	---	---
145E	OUTFALL	704.45	---	0.50%	---	---	---	---	---	---	---	---	---	1
150A	150B	702.64	702.38	0.65%	---	39.0	---	---	---	---	---	---	---	---
150B	150C	702.13	702.08	0.50%	11.0	---	---	---	---	---	---	---	---	---
150C	150D	702.08	701.84	0.50%	47.0	---	---	---	---	---	---	---	---	---
150D	150E	701.84	701.53	0.50%	62.4	---	---	---	---	---	---	---	---	---
150E	OUTFALL	701.53	---	0.50%	---	---	---	---	---	---	---	---	---	1
155A	155B	701.74	701.58	1.00%	---	16.1	---	---	---	---	---	---	---	---
155B	155C	701.58	701.38	0.50%	---	39.0	---	---	---	---	---	---	---	---
155C	155D	701.38	701.29	0.50%	---	19.0	---	---	---	---	---	---	---	---
155D	155E	701.04	700.84	0.50%	---	---	39.0	---	---	---	---	---	---	---
155E	155F	700.84	700.64	0.60%	---	---	34.1	---	---	---	---	---	---	---
155F	OUTFALL	700.64	---	0.60%	---	---	---	---	---	---	---	---	---	1
160A	160B	700.55	700.35	0.50%	---	40.0	---	---	---	---	---	---	---	---
160B	160C	700.35	700.25	0.50%	---	19.7	---	---	---	---	---	---	---	---
SUBTOTALS					**120.4**	**424.9**	**73.1**	**0.0**	**74.8**	**196.4**	**0.0**	**0.0**	**407.0**	**16**

1. PIPE LENGTHS ARE FROM CENTER TO CENTER OF STRUCTURES.

*ADDITIONAL QUANTITIES SHOWN ELSEWHERE. SEE "CROSS CULVERTS & SIDE ROAD CULVERTS" TABLE.

ALL ITEMS CATEGORY 0010 UNLESS NOTED

STORM SEWER PIPES (cont.)

					608.0315	608.0412	608.0415	608.0418	608.0421	608.0424	608.0430	608.2343	608.2424	* 633.5200
					STORM SEWER PIPE REINFORCED CONCRETE							HORIZONTAL ELLIPTICAL		MARKERS CULVERT END
FROM STR	TO STR	INLET ELEV	DISCH ELEV	SLOPE %	CLASS III 15-INCH LF	CLASS IV 12-INCH LF	CLASS IV 15-INCH LF	CLASS IV 18-INCH LF	CLASS IV 21-INCH LF	CLASS IV 24-INCH LF	CLASS IV 30-INCH LF	CLASS III-HE 43X68-INCH LF	CLASS IV-HE 24X38-INCH LF	EACH
160C	160D	700	699.83	0.50%	---	---	33.8	---	---	---	---	---	---	---
160D	160F	699.83	699.63	0.50%	---	---	39.0	---	---	---	---	---	---	---
160E	160F	699.93	699.88	0.50%	---	10.0	---	---	---	---	---	---	---	---
160F	160G	699.38	699.24	0.50%	---	---	---	29.8	---	---	---	---	---	---
160G	OUTFALL	699.24	---	0.50%	---	---	---	---	---	---	---	---	---	1
165A	165B	700.28	700.1	0.80%	---	23.0	---	---	---	---	---	---	---	---
165B	OUTFALL	700.1	---	0.80%	---	---	---	---	---	---	---	---	---	1
170A	170B	699.41	699.33	1.00%	---	7.4	---	---	---	---	---	---	---	---
170B	170C	699.33	699.05	0.50%	---	57.7	---	---	---	---	---	---	---	---
170C	170D	698.8	698.68	0.50%	---	---	23.3	---	---	---	---	---	---	---
170D	OUTFALL	698.68	---	0.50%	---	---	---	---	---	---	---	---	---	1
175A	175B	698.66	698.6	0.50%	---	13.0	---	---	---	---	---	---	---	---
175B	OUTFALL	698.6	---	0.50%	---	---	---	---	---	---	---	---	---	1
180A	180B	700.28	699.99	1.00%	---	29.2	---	---	---	---	---	---	---	---
180B	180C	699.99	699.71	0.50%	---	55.2	---	---	---	---	---	---	---	---
180C	OUTFALL	699.71	---	0.50%	---	---	---	---	---	---	---	---	---	1
185A	185B	699.1	698.95	0.50%	---	31.4	---	---	---	---	---	---	---	---
185B	185D	698.7	698.33	0.30%	---	---	122.3	---	---	---	---	---	---	---
185C	185B	699	698.95	0.50%	---	10.0	---	---	---	---	---	---	---	---
185D	OUTFALL	698.33	---	0.30%	---	---	---	---	---	---	---	---	---	1
190A	190B	698.27	698.17	0.50%	---	19.6	---	---	---	---	---	---	---	---
190B	190	698.17	698.13	0.50%	---	9.0	---	---	---	---	---	---	---	---
190C	190	697.5	697.41	0.29%	---	---	---	---	---	---	---	31.5	---	1
190	190D	697.41	696.92	0.29%	---	---	---	---	---	---	---	167.4	---	---
190D	OUTFALL	696.92	---	0.29%	---	---	---	---	---	---	---	---	---	1
195A	195B	698.43	698.24	1.00%	---	19.0	---	---	---	---	---	---	---	---
195B	195C	698.24	697.75	1.00%	---	49.2	---	---	---	---	---	---	---	---
195C	195D	697.75	697.61	1.00%	---	13.7	---	---	---	---	---	---	---	---
195D	OUTFALL	697.61	---	1.00%	---	---	---	---	---	---	---	---	---	1
200A	200B	697.58	697.53	0.50%	---	10.0	---	---	---	---	---	---	---	---
200B	200C	697.28	697.02	0.50%	---	---	52.8	---	---	---	---	---	---	---
200C	OUTFALL	697.02	---	0.50%	---	---	---	---	---	---	---	---	---	1
205A	205B	697.67	697.47	2.00%	---	10.0	---	---	---	---	---	---	---	---
205B	205C	697.47	696.48	2.00%	---	49.1	---	---	---	---	---	---	---	---
205C	205D	696.48	696.34	1.00%	---	14.0	---	---	---	---	---	---	---	---
205D	OUTFALL	696.34	---	1.00%	---	---	---	---	---	---	---	---	---	1
210A	210B	698.27	698.08	1.00%	---	19.0	---	---	---	---	---	---	---	---
210B	210C	698.08	697.59	1.00%	---	49.1	---	---	---	---	---	---	---	---
210C	210D	697.34	697.19	1.00%	---	---	14.7	---	---	---	---	---	---	---
210D	OUTFALL	697.19	---	1.00%	---	---	---	---	---	---	---	---	---	1
215A	215B	700.83	700.64	1.00%	---	19.0	---	---	---	---	---	---	---	---
215B	215C	700.64	700.15	1.00%	---	48.6	---	---	---	---	---	---	---	---
215C	215D	699.9	699.75	1.00%	---	---	15.5	---	---	---	---	---	---	---
215D	OUTFALL	699.75	---	1.00%	---	---	---	---	---	---	---	---	---	1
220A	220B	702.61	702.41	0.50%	---	39.0	---	---	---	---	---	---	---	---
220B	220C	702.41	702.32	0.50%	---	19.0	---	---	---	---	---	---	---	---
220C	220D	702.07	701.82	0.50%	---	---	48.6	---	---	---	---	---	---	---
220D	220E	701.82	701.65	1.00%	---	---	17.9	---	---	---	---	---	---	---
220E	OUTFALL	701.65	---	1.00%	---	---	---	---	---	---	---	---	---	1
221A	221B	703.36	703.18	1.00%	---	17.7	---	---	---	---	---	---	---	---
SUBTOTALS					**0.0**	**641.9**	**367.9**	**29.8**	**0.0**	**0.0**	**0.0**	**198.9**	**0.0**	**14**

1. PIPE LENGTHS ARE FROM CENTER TO CENTER OF STRUCTURES.

*ADDITIONAL QUANTITIES SHOWN ELSEWHERE. SEE "CROSS CULVERTS & SIDE ROAD CULVERTS" TABLE.

ALL ITEMS CATEGORY 0010 UNLESS NOTED

3

STORM SEWER PIPES (cont.)

FROM STR	TO STR	INLET ELEV	DISCH ELEV	SLOPE %	608.0315 CLASS III 15-INCH LF	608.0412 CLASS IV 12-INCH LF	608.0415 CLASS IV 15-INCH LF	608.0418 CLASS IV 18-INCH LF	608.0421 CLASS IV 21-INCH LF	608.0424 CLASS IV 24-INCH LF	608.0430 CLASS IV 30-INCH LF	608.2343 HORIZONTAL ELLIPTICAL CLASS III-HE 43X68-INCH LF	608.2424 HORIZONTAL ELLIPTICAL CLASS IV-HE 24X38-INCH LF	* 633.5200 MARKERS CULVERT END EACH
					STORM SEWER PIPE REINFORCED CONCRETE									
221B	OUTFALL	703.18	---	1.00%	---	---	---	---	---	---	---	---	---	1
225A	225B	702.73	702.54	0.50%	---	39.0	---	---	---	---	---	---	---	---
225B	225C	702.54	702.44	0.50%	---	19.0	---	---	---	---	---	---	---	---
225C	225D	702.19	701.95	0.50%	---	---	48.6	---	---	---	---	---	---	---
225D	225E	701.95	701.77	1.00%	---	---	18.0	---	---	---	---	---	---	---
225E	OUTFALL	701.77	---	1.00%	---	---	---	---	---	---	---	---	---	1
230A	230B	699.4	699.21	0.50%	---	39.0	---	---	---	---	---	---	---	---
230B	230C	699.21	699.11	0.50%	---	19.0	---	---	---	---	---	---	---	---
230C	230D	698.86	698.62	0.50%	---	---	48.6	---	---	---	---	---	---	---
230D	230E	698.62	698.55	0.50%	---	---	14.7	---	---	---	---	---	---	---
230E	OUTFALL	698.55	---	0.50%	---	---	---	---	---	---	---	---	---	1
600A	600B	700.97	700.91	0.50%	---	12.6	---	---	---	---	---	---	---	---
600B	OUTFALL	700.91	---	0.50%	---	---	---	---	---	---	---	---	---	1
605A	605B	701.8	701.76	0.50%	---	7.8	---	---	---	---	---	---	---	---
605B	OUTFALL	701.76	---	0.50%	---	---	---	---	---	---	---	---	---	1
SUBTOTALS					**0.0**	**136.4**	**129.9**	**0.0**	**0.0**	**0.0**	**0.0**	**0.0**	**0.0**	**5**
PROJECT TOTAL					**269.5**	**2,510.7**	**898.5**	**156.2**	**246.3**	**196.4**	**42.0**	**198.9**	**407.0**	**54**

1. PIPE LENGTHS ARE FROM CENTER TO CENTER OF STRUCTURES.
*ADDITIONAL QUANTITIES SHOWN ELSEWHERE. SEE "CROSS CULVERTS & SIDE ROAD CULVERTS" TABLE.

ALL ITEMS CATEGORY 0010 UNLESS NOTED

STORM SEWER STRUCTURES

STRUCTURE NUMBER	STATION	ALIGNMENT	OFFSET	RIM ELEV	INVERT ELEV	STR DEPTH FEET	611.0530 MANHOLE COVERS TYPE J EACH	611.0545 MANHOLE COVERS TYPE L EACH	611.0624 INLET COVERS TYPE H EACH	611.0627 INLET COVERS TYPE HM EACH	611.0645 INLET COVERS TYPE MS-A EACH	611.1004 CATCH BASINS 4-FT DIAMETER EACH	611.1005 CATCH BASINS 5-FT DIAMETER EACH	611.1230 CATCH BASINS 2X3-FT EACH	611.2004 MANHOLES 4-FT DIAMETER EACH	611.2005 MANHOLES 5-FT DIAMETER EACH	611.2006 MANHOLES 6-FT DIAMETER EACH	611.2008 MANHOLES 8-FT DIAMETER EACH	611.3004 INLETS 4-FT DIAMETER EACH	611.3230 INLETS 2X3-FT EACH	611.3901 INLETS MEDIAN 1 GRATE EACH	611.3902 INLETS MEDIAN 2 GRATE EACH	611.8110 ADJUSTING MANHOLE COVERS EACH	611.8115 ADJUSTING INLET COVERS EACH	SPV.0060.01 CATCH BASINS MEDIAN 1 GRATE EACH	* 650.4000 CONSTRUCTION STAKING STORM SEWER EACH	COMMENTS
20B	27+56.82	WB	26.1' RT	715.73	711.56	3.17	---	---	---	1	---	---	---	---	---	---	---	---	1	---	---	---	---	---	---	---	1	---
20D	27+57.43	WB	10.7' RT	715.73	711.40	3.33	---	---	---	1	---	---	---	---	---	---	---	---	1	---	---	---	---	---	---	---	1	---
20E	27+76.05	WB	5.5' RT	715.72	711.21	3.26	1	---	---	---	---	---	---	---	1	---	---	---	---	---	---	---	---	---	---	---	1	FLAT TOP SLAB, 2' DIAMETER OPENING
20F	27+79.22	WB	33.5' LT	715.47	---	---	---	---	---	---	---	---	---	---	---	---	---	---	---	---	---	---	---	---	1	---	---	---
20	27+78.29	WB	16.8' LT	715.94	---	---	---	---	---	---	---	---	---	---	---	---	---	---	---	---	---	---	---	1	---	---	---	---
21A	29+25.00	WB	13.5' RT	714.72	710.55	3.17	---	---	---	1	---	---	---	---	---	---	---	---	---	1	---	---	---	---	---	---	1	---
21B	29+78.77	WB	13.5' RT	714.42	710.01	3.41	---	---	---	1	---	---	---	---	---	---	---	---	---	1	---	---	---	---	---	---	1	---
21	29+78.89	WB	15.6' LT	714.83	---	---	---	---	---	---	---	---	---	---	---	---	---	---	---	---	---	---	---	1	---	---	---	---
11B	27+58.11	WB	89.7' RT	715.42	711.23	3.19	---	---	---	1	---	---	---	---	---	---	---	---	---	1	---	---	---	---	---	---	1	---
11C	27+74.75	WB	73.4' RT	715.67	711.14	3.28	1	---	---	---	---	---	---	---	---	---	---	---	---	---	---	---	---	---	---	---	---	---
11	27+73.99	WB	57.3' RT	715.97	---	---	---	---	---	---	---	---	---	---	---	---	---	---	---	---	---	---	---	1	---	---	---	---
12	29+81.45	WB	51.3' RT	714.8	---	---	---	---	---	---	---	---	---	---	---	---	---	---	---	---	---	---	---	1	---	---	---	---
22A	30+58.57	WB	33.5' LT	713.89	709.72	3.17	---	---	---	1	---	---	---	---	---	---	---	---	---	1	---	---	---	---	---	---	1	---
22B	30+58.86	WB	26.4' RT	714.15	710.03	3.12	---	---	---	1	---	---	---	---	---	---	---	---	---	1	---	---	---	---	---	---	1	---
22C	30+58.57	WB	13.5' RT	713.97	709.71	3.26	---	---	---	1	---	---	---	---	---	---	---	---	---	1	---	---	---	---	---	---	1	---
22	30+58.57	WB	8.7' LT	714.38	---	---	---	---	---	---	---	---	---	---	---	---	---	---	---	---	---	---	---	1	---	---	---	---
13A	30+77.30	WB	65.0' RT	713.8	709.80	3.00	---	---	---	1	---	---	---	---	---	---	---	---	---	1	---	---	---	---	---	---	1	---
13	30+76.98	WB	49.4' RT	714.25	---	---	---	---	---	---	---	---	---	---	---	---	---	---	---	---	---	---	---	1	---	---	---	---
23A	31+30.39	WB	69.5' LT	711.2	709.16	1.54	---	---	---	---	1	---	---	---	---	---	---	---	---	---	---	---	---	---	---	1	1	---
23B	32+10.84	WB	75.6' LT	---	708.76	---	---	---	---	---	---	---	---	---	---	---	---	---	---	---	---	---	---	---	---	---	---	---
23	31+80.57	WB	3.1' LT	713.58	---	---	---	---	---	---	---	---	---	---	---	---	---	---	---	---	---	---	---	1	---	---	---	---
24A	32+05.23	WB	43.1' LT	713.8	708.38	---	---	---	---	---	---	---	---	---	---	---	---	---	---	---	---	---	---	---	1	---	---	---
24	32+26.30	WB	26.6' LT	713.15	708.31	3.59	1	---	---	---	---	---	---	---	---	---	1	---	---	---	---	---	---	---	---	---	1	---
25	32+42.33	WB	65.4' LT	---	708.14	---	---	---	---	---	---	---	---	---	---	---	---	---	---	---	---	---	---	---	---	---	---	---
14	32+36.37	WB	48.6' RT	713.32	---	---	---	---	---	---	---	---	---	---	---	---	---	---	---	---	---	---	---	1	---	---	---	---
30A	33+80.83	WB	5.5' RT	712.3	707.90	3.40	---	---	---	1	---	---	---	---	---	---	---	---	---	1	---	---	---	---	---	---	1	---
30B	33+80.83	WB	33.5' LT	712.06	707.46	3.60	---	---	---	1	---	---	---	1	---	---	---	---	---	---	---	---	---	---	---	---	1	---
30C	33+80.83	WB	66.1' LT	---	707.30	---	---	---	---	---	---	---	---	---	---	---	---	---	---	---	---	---	---	---	---	---	---	---
15A	33+80.83	WB	24.5' RT	712.31	708.31	3.00	---	---	---	1	---	---	---	---	---	---	---	---	---	1	---	---	---	---	---	---	1	---
15B	33+70.83	WB	63.5' RT	712.29	708.29	3.00	---	---	---	1	---	---	---	---	---	---	---	---	1	---	---	---	---	---	---	---	1	---
15D	33+80.89	WB	59.5' RT	712.28	707.74	3.29	1	---	---	---	---	---	---	---	1	---	---	---	---	---	---	---	---	---	---	---	1	---
15	33+80.83	WB	50.0' RT	712.47	---	---	---	---	---	---	---	---	---	---	---	---	---	---	---	---	---	---	---	1	---	---	---	---
35A	36+78.09	WB	5.5' RT	710.61	706.00	3.61	---	---	---	1	---	---	---	---	---	---	---	---	---	1	---	---	---	---	---	---	1	---
35B	36+78.09	WB	33.5' LT	710.37	705.56	3.81	---	---	---	1	---	---	---	1	---	---	---	---	---	---	---	---	---	---	---	---	1	---
35C	36+78.09	WB	71.1' LT	---	705.37	---	---	---	---	---	---	---	---	---	---	---	---	---	---	---	---	---	---	---	---	---	---	---
16A	36+78.09	WB	24.5' RT	710.62	706.62	3.00	---	---	---	1	---	---	---	---	---	---	---	---	---	1	---	---	---	---	---	---	1	---
16B	36+09.21	WB	72.5' RT	710.75	706.60	3.16	---	---	---	1	---	---	---	---	---	---	---	---	---	1	---	---	---	---	---	---	1	---
16D	36+77.28	WB	84.7' RT	709.58	---	---	---	---	---	---	---	---	---	---	---	---	---	---	---	---	---	---	---	---	---	---	---	EXISTING INLET TO REMAIN
16C	36+77.17	WB	72.5' RT	710.37	706.01	3.36	---	---	---	1	---	---	---	---	---	---	---	---	---	1	---	---	---	---	---	---	1	---
16	36+78.09	WB	55.1' RT	710.68	---	---	---	---	---	---	---	---	---	---	---	---	---	---	---	---	---	---	---	1	---	---	---	---
17	37+79.16	WB	52.8' RT	710.16	---	---	---	---	---	---	---	---	---	---	---	---	---	---	---	---	---	---	---	1	---	---	---	---
40A	38+47.22	WB	72.5' RT	709.41	705.41	3.00	---	---	---	1	---	---	---	---	---	---	---	---	---	1	---	---	---	---	---	---	1	---
40B	38+57.32	WB	72.5' RT	709.35	705.35	3.00	---	---	---	1	---	---	---	---	---	---	---	---	---	1	---	---	---	---	---	---	1	---
40C	38+57.32	WB	16.5' RT	709.45	704.96	3.49	---	---	---	1	---	---	---	---	---	---	---	---	---	1	---	---	---	---	---	---	1	---
40D	38+57.32	WB	5.5' RT	709.59	704.91	3.68	---	---	---	1	---	---	---	---	---	---	---	---	---	1	---	---	---	---	---	---	1	---
40E	38+57.32	WB	43.6' LT	707.31	704.41	2.40	---	---	---	---	1	---	---	---	---	---	---	---	---	---	---	---	---	---	---	1	1	---
40F	38+57.32	WB	57.7' LT	---	704.34	---	---	---	---	---	---	---	---	---	---	---	---	---	---	---	---	---	---	---	---	---	---	---
45A	40+00.00	WB	43.8' LT	706.66	703.76	2.40	---	---	---	---	1	---	---	---	---	---	---	---	---	---	---	---	---	---	---	1	1	---
45B	40+00.00	WB	58.3' LT	---	703.69	---	---	---	---	---	---	---	---	---	---	---	---	---	---	---	---	---	---	---	---	---	---	---
50A	40+50.61	WB	24.5' RT	708.64	704.39	3.25	---	---	---	1	---	---	---	---	---	---	---	---	---	1	---	---	---	---	---	---	1	---
SUBTOTALS							**4**	**0**	**0**	**23**	**3**	**0**	**0**	**2**	**2**	**0**	**1**	**0**	**3**	**18**	**0**	**0**	**11**	**2**	**3**	**29**	

1. RIM ELEVATIONS ARE GIVEN AT THE FLANGE LINE OF STRUCTURES WITHIN CURB LINES. RIM ELEVATIONS ARE GIVEN AT THE CENTER OF ALL OTHER STRUCTURES.
2. STATIONS AND OFFSETS ARE TO THE CENTER OF STRUCTURES.
3. STRUCTURE DEPTH: RIM ELEV - INVERT ELEV - CASTING HEIGHT - ADJUSTMENT (+ 24" FOR CATCH BASINS)
4. CASTING HEIGHT = 6" FOR TYPE H AND TYPE HM COVERS, 9" FOR TYPE J COVERS, 4" FOR TYPE L COVERS, 0" FOR TYPE MS-A COVERS
5. ADJUSTMENT = 6"

*ADDITIONAL QUANTITIES SHOWN ELSEWHERE. SEE "STORM SEWER STRUCTURES - APRON ENDWALLS" TABLES.

ALL ITEMS CATEGORY 0010 UNLESS NOTED

STORM SEWER STRUCTURES (cont.)

STRUCTURE NUMBER	STATION	ALIGNMENT	OFFSET	RIM ELEV	INVERT ELEV	STR DEPTH FEET	611.0530 MANHOLE COVERS TYPE J EACH	611.0545 MANHOLE COVERS TYPE L EACH	611.0624 INLET COVERS TYPE H EACH	611.0627 INLET COVERS TYPE HM EACH	611.0645 INLET COVERS TYPE MS-A EACH	611.1004 CATCH BASINS 4-FT DIAMETER EACH	611.1005 CATCH BASINS 5-FT DIAMETER EACH	611.1230 CATCH BASINS 2X3-FT EACH	611.2004 MANHOLES 4-FT DIAMETER EACH	611.2005 MANHOLES 5-FT DIAMETER EACH	611.2006 MANHOLES 6-FT DIAMETER EACH	611.2008 MANHOLES 8-FT DIAMETER EACH	611.3004 INLETS 4-FT DIAMETER EACH	611.3230 INLETS 2X3-FT EACH	611.3901 INLETS MEDIAN 1 GRATE EACH	611.3902 INLETS MEDIAN 2 GRATE EACH	611.8110 ADJUSTING MANHOLE COVERS EACH	611.8115 ADJUSTING INLET COVERS EACH	SPV.0060.01 CATCH BASINS MEDIAN 1 GRATE EACH	650.4000 CONSTRUCTION STAKING STORM SEWER EACH	COMMENTS
50B	40+62.90	WB	24.5' RT	708.59	704.27	3.32	---	---	---	1	---	---	---	---	---	---	---	---	---	1	---	---	---	---	---	1	---
50H	39+95.00	WB	13.5' RT	708.65	704.60	3.05	---	---	---	1	---	---	---	---	---	---	---	---	---	1	---	---	---	---	---	1	---
50C	40+53.06	WB	13.5' RT	708.49	704.31	3.18	---	---	---	1	---	---	---	---	---	---	---	---	---	1	---	---	---	---	---	1	---
50D	40+63.08	WB	13.5' RT	708.48	703.96	3.52	---	---	---	1	---	---	---	---	---	---	---	---	---	1	---	---	---	---	---	1	---
50E	40+73.03	WB	33.5' LT	708.41	704.08	3.33	---	---	---	1	---	---	---	---	---	---	---	---	---	1	---	---	---	---	---	1	---
50F	40+63.08	WB	33.5' LT	708.4	703.48	3.92	---	---	---	1	---	---	---	1	---	---	---	---	---	---	---	---	---	---	---	1	---
50G	40+63.08	WB	56.3' LT	---	703.36	---	---	---	---	---	---	---	---	---	---	---	---	---	---	---	---	---	---	---	---	---	---
55A	42+11.65	WB	13.5' RT	709.07	704.28	3.79	---	---	---	1	---	---	---	---	---	---	---	---	---	1	---	---	---	---	---	1	---
55B	42+11.65	WB	33.5' LT	708.99	703.81	4.18	---	---	---	1	---	---	---	1	---	---	---	---	---	---	---	---	---	---	---	1	---
55C	42+11.65	WB	59.6' LT	---	703.55	---	---	---	---	---	---	---	---	---	---	---	---	---	---	---	---	---	---	---	---	---	---
55D	42+40.10	WB	20.7' RT	708.96	704.63	3.33	---	---	---	1	---	---	---	1	---	---	---	---	---	---	---	---	---	---	---	1	---
55E	42+40.10	WB	74.8' RT	---	704.09	---	---	---	---	---	---	---	---	---	---	---	---	---	---	---	---	---	---	---	---	---	---
60A	43+25.00	WB	43.1' LT	707.26	704.58	2.18	---	---	---	---	1	---	---	---	---	---	---	---	---	---	---	---	---	---	---	1	---
60B	43+25.00	WB	58.7' LT	---	704.50	---	---	---	---	---	---	---	---	---	---	---	---	---	---	---	---	---	---	---	---	---	---
65A	45+00.00	WB	24.5' RT	711.8	707.66	3.14	---	---	---	1	---	---	---	---	---	---	---	---	---	1	---	---	---	---	---	1	---
65B	45+00.00	WB	5.5' RT	712.31	707.57	3.74	---	---	---	1	---	---	---	---	---	---	---	---	---	1	---	---	---	---	---	1	---
65C	45+00.00	WB	43.1' LT	709.71	707.07	2.14	---	---	---	---	1	---	---	---	---	---	---	---	---	---	---	---	---	---	1	1	---
65D	45+00.00	WB	58.0' LT	---	707.00	---	---	---	---	---	---	---	---	---	---	---	---	---	---	---	---	---	---	---	---	---	---
66A	47+11.62	WB	82.2' RT	715.79	712.68	2.61	---	---	---	---	1	---	---	---	---	---	---	---	---	---	---	---	---	---	1	1	---
66B	45+83.02	WB	83.2' RT	---	710.84	---	---	---	---	---	---	---	---	---	---	---	---	---	---	---	---	---	---	---	---	---	---
71A	48+00.00	WB	63.5' RT	719.78	715.82	2.96	---	---	---	1	---	---	---	---	---	---	---	---	---	1	---	---	---	---	---	1	---
71B	48+00.00	WB	24.5' RT	720.02	715.62	3.40	---	---	---	1	---	---	---	---	---	---	---	---	---	1	---	---	---	---	---	1	---
71C	48+00.00	WB	5.5' RT	720.52	715.28	4.24	---	---	---	1	---	---	---	---	---	---	---	---	---	1	---	---	---	---	---	1	---
71D	48+00.00	WB	33.5' LT	720.28	715.08	4.20	---	---	---	1	---	---	---	1	---	---	---	---	---	---	---	---	---	---	---	1	---
70A	48+62.50	WB	68.6' LT	---	716.52	---	---	---	---	---	---	---	---	---	---	---	---	---	---	---	---	---	---	---	---	---	---
70	48+62.50	WB	40.5' LT	722.71	715.70	5.76	1	---	---	---	---	---	---	---	1	---	---	---	---	---	---	---	---	---	---	1	---
71	48+00.00	WB	40.5' LT	720.92	714.55	5.12	1	---	---	---	---	---	---	---	1	---	---	---	---	---	---	---	---	---	---	1	---
72	46+53.44	WB	40.5' LT	716.68	712.51	2.92	1	---	---	---	---	---	---	---	1	---	---	---	---	---	---	---	---	---	---	1	---
72A	46+36.94	WB	59.2' LT	---	712.26	---	---	---	---	---	---	---	---	---	---	---	---	---	---	---	---	---	---	---	---	---	---
75A	50+91.62	WB	63.5' RT	727.26	722.66	3.60	---	---	---	1	---	---	---	---	---	---	---	---	---	1	---	---	---	---	---	1	---
75B	50+91.62	WB	24.5' RT	727.87	722.46	4.41	---	---	---	1	---	---	---	---	---	---	---	---	---	1	---	---	---	---	---	1	---
75C	50+91.62	WB	5.5' RT	728.1	722.12	4.98	---	---	---	1	---	---	---	---	---	---	---	---	---	1	---	---	---	---	---	1	---
75D	50+91.62	WB	33.5' LT	728.49	721.92	5.57	---	---	---	1	---	---	---	1	---	---	---	---	---	---	---	---	---	---	---	1	---
75E	50+85.70	WB	68.2' LT	---	721.75	---	---	---	---	---	---	---	---	---	---	---	---	---	---	---	---	---	---	---	---	---	---
80A	56+12.04	WB	63.5' RT	726.77	722.87	2.90	---	---	---	1	---	---	---	---	---	---	---	---	---	1	---	---	---	---	---	1	---
80B	56+12.04	WB	24.5' RT	727.90	722.67	4.23	---	---	---	1	---	---	---	---	---	---	---	---	---	1	---	---	---	---	---	1	---
80C	56+12.04	WB	5.5' RT	727.6	722.33	4.27	---	---	---	1	---	---	---	---	---	---	---	---	---	1	---	---	---	---	---	1	---
80D	56+12.04	WB	33.5' LT	728.65	722.13	5.52	---	---	---	1	---	---	---	1	---	---	---	---	---	---	---	---	---	---	---	1	---
80E	56+21.87	WB	68.0' LT	---	721.95	---	---	---	---	---	---	---	---	---	---	---	---	---	---	---	---	---	---	---	---	---	---
85A	59+19.18	WB	24.5' RT	720.98	716.18	3.80	---	---	---	1	---	---	---	---	---	---	---	---	---	1	---	---	---	---	---	1	---
85B	59+19.18	WB	5.5' RT	720.85	716.08	3.77	---	---	---	1	---	---	---	---	---	---	---	---	---	1	---	---	---	---	---	1	---
85C	59+19.18	WB	43.2' LT	718.4	715.59	2.31	---	---	---	---	1	---	---	---	---	---	---	---	---	---	---	---	---	---	1	1	---
85D	59+19.18	WB	58.8' LT	---	715.51	---	---	---	---	---	---	---	---	---	---	---	---	---	---	---	---	---	---	---	---	---	---
90A	60+81.00	WB	43.1' LT	715.46	712.96	2.00	---	---	---	---	1	---	---	---	---	---	---	---	---	---	---	---	---	---	1	1	---
90B	60+81.00	WB	60.6' LT	---	712.87	---	---	---	---	---	---	---	---	---	---	---	---	---	---	---	---	---	---	---	---	---	---
95A	62+19.18	WB	24.5' RT	714.25	710.25	3.00	---	---	---	1	---	---	---	---	---	---	---	---	---	1	---	---	---	---	---	1	---
95B	62+19.18	WB	5.5' RT	716.62	710.16	5.47	---	---	---	1	---	---	---	---	---	---	---	---	---	1	---	---	---	---	---	1	---
95C	62+50.00	WB	43.1' LT	713.72	711.55	1.67	---	---	---	---	1	---	---	---	---	---	---	---	---	---	---	---	---	---	1	1	---
95D	62+19.18	WB	43.1' LT	714.03	709.66	3.87	---	---	---	---	1	---	---	---	---	---	---	---	---	---	---	---	---	---	1	1	---
95E	62+19.18	WB	66.7' LT	---	709.55	---	---	---	---	---	---	---	---	---	---	---	---	---	---	---	---	---	---	---	---	---	---
SUBTOTALS							**3**	**0**	**0**	**27**	**7**	**0**	**0**	**6**	**3**	**0**	**0**	**0**	**0**	**21**	**0**	**0**	**0**	**0**	**7**	**37**	

1. RIM ELEVATIONS ARE GIVEN AT THE FLANGE LINE OF STRUCTURES WITHIN CURB LINES. RIM ELEVATIONS ARE GIVEN AT THE CENTER OF ALL OTHER STRUCTURES.
2. STATIONS AND OFFSETS ARE TO THE CENTER OF STRUCTURES.
3. STRUCTURE DEPTH: RIM ELEV - INVERT ELEV - CASTING HEIGHT - ADJUSTMENT (+ 24" FOR CATCH BASINS)
4. CASTING HEIGHT = 6" FOR TYPE H AND TYPE HM COVERS, 9" FOR TYPE J COVERS, 4" FOR TYPE L COVERS, 0" FOR TYPE MS-A COVERS
5. ADJUSTMENT = 6"

*ADDITIONAL QUANTITIES SHOWN ELSEWHERE. SEE "STORM SEWER STRUCTURES - APRON ENDWALLS" TABLES.

ALL ITEMS CATEGORY 0010 UNLESS NOTED

STORM SEWER STRUCTURES (cont.)

STRUCTURE NUMBER	STATION	ALIGNMENT	OFFSET	RIM ELEV	INVERT ELEV	STR DEPTH FEET	611.0530 MANHOLE COVERS TYPE J EACH	611.0545 MANHOLE COVERS TYPE L EACH	611.0624 INLET COVERS TYPE H EACH	611.0627 INLET COVERS TYPE HM EACH	611.0645 INLET COVERS TYPE MS-A EACH	611.1004 CATCH BASINS 4-FT DIAMETER EACH	611.1005 CATCH BASINS 5-FT DIAMETER EACH	611.1230 CATCH BASINS 2X3-FT EACH	611.2004 MANHOLES 4-FT DIAMETER EACH	611.2005 MANHOLES 5-FT DIAMETER EACH	611.2006 MANHOLES 6-FT DIAMETER EACH	611.2008 MANHOLES 8-FT DIAMETER EACH	611.3004 INLETS 4-FT DIAMETER EACH	611.3230 INLETS 2X3-FT EACH	611.3901 INLETS MEDIAN 1 GRATE EACH	611.3902 INLETS MEDIAN 2 GRATE EACH	611.8110 ADJUSTING MANHOLE COVERS EACH	611.8115 ADJUSTING INLET COVERS EACH	SPV.0060.01 CATCH BASINS MEDIAN 1 GRATE EACH	650.4000 CONSTRUCTION STAKING STORM SEWER EACH	COMMENTS
105A	64+33.83	WB	24.5' RT	711.73	708.13	2.60	---	---	---	1	---	---	---	---	---	---	---	---	---	1	---	---	---	---	---	---	---
105B	64+43.83	WB	24.5' RT	711.7	708.08	2.62	---	---	---	1	---	---	---	1	---	---	---	---	---	---	---	---	---	---	---	---	---
105C	64+43.83	WB	69.6' RT	---	707.85	---	---	---	---	---	---	---	---	---	---	---	---	---	---	---	---	---	---	---	---	---	---
110A	65+63.67	WB	59.9' LT	---	708.18	---	---	---	---	---	---	---	---	---	---	---	---	---	---	---	---	---	---	---	---	---	---
110B	65+63.67	WB	43.1' LT	711.25	708.04	2.71	---	---	---	---	2	---	---	---	---	---	---	---	---	---	---	1	---	---	---	1	---
110C	65+63.67	WB	5.5' RT	713.81	707.63	5.18	---	---	---	1	---	---	---	---	---	1	---	---	---	---	---	---	---	---	---	1	FLAT TOP SLAB, 2'X3' OPENING
110D	65+63.67	WB	22.9' RT	712.32	707.49	3.83	---	---	---	1	---	---	1	---	---	---	---	---	---	---	---	---	---	---	---	1	---
110E	65+63.66	WB	73.1' RT	---	707.07	---	---	---	---	---	---	---	---	---	---	---	---	---	---	---	---	---	---	---	---	---	---
110F	65+53.67	WB	59.7' LT	---	708.22	---	---	---	---	---	---	---	---	---	---	---	---	---	---	---	---	---	---	---	---	---	---
110G	65+53.67	WB	5.5' RT	713.84	707.67	5.17	---	---	---	1	---	---	---	---	---	1	---	---	---	---	---	---	---	---	---	1	FLAT TOP SLAB, 2'X3' OPENING
110H	65+53.67	WB	72.7' RT	---	707.10	---	---	---	---	---	---	---	---	---	---	---	---	---	---	---	---	---	---	---	---	---	---
125A	68+45.36	WB	59.7' LT	---	707.92	---	---	---	---	---	---	---	---	---	---	---	---	---	---	---	---	---	---	---	---	---	---
125B	68+98.42	WB	42.5' LT	712.56	708.56	3.00	---	---	---	1	---	---	---	---	---	---	---	---	1	---	---	---	---	---	---	1	---
125D	68+45.36	WB	43.2' LT	710.96	707.85	2.61	---	---	---	---	2	---	---	---	---	---	---	---	---	---	---	1	---	---	---	1	---
125E	68+45.36	WB	5.5' RT	714.25	707.64	5.61	---	---	---	1	---	---	---	---	---	1	---	---	---	---	---	---	---	---	---	1	FLAT TOP SLAB, 2'X3' OPENING
125F	68+67.86	WB	16.5' RT	713.56	709.04	3.52	---	---	---	1	---	---	---	---	---	---	---	---	---	1	---	---	---	---	---	1	---
125G	68+45.36	WB	16.5' RT	713.63	707.59	5.04	---	---	---	1	---	---	1	---	---	---	---	---	---	---	---	---	---	---	---	1	---
125H	68+23.36	WB	77.8' RT	---	707.30	---	---	---	---	---	---	---	---	---	---	---	---	---	---	---	---	---	---	---	---	---	---
130A	71+50.05	WB	63.7' LT	---	708.21	---	---	---	---	---	---	---	---	---	---	---	---	---	---	---	---	---	---	---	---	---	---
130B	71+50.00	WB	33.5' LT	711.67	706.90	3.77	---	---	---	1	---	---	---	---	---	---	---	---	---	1	---	---	---	---	---	1	---
130C	71+50.04	WB	8.4' RT	712.63	706.27	5.36	---	---	---	1	---	---	---	---	---	---	---	---	1	---	---	---	---	---	---	1	---
130D	71+50.00	WB	24.5' RT	712.04	706.03	5.01	---	---	---	1	---	---	---	1	---	---	---	---	---	---	---	---	---	---	---	1	---
130E	71+49.85	WB	77.9' RT	---	705.23	---	---	---	---	---	---	---	---	---	---	---	---	---	---	---	---	---	---	---	---	---	---
132A	73+16.02	WB	24.5' RT	711.03	706.70	3.33	---	---	---	1	---	---	---	1	---	---	---	---	---	---	---	---	---	---	---	1	---
132B	73+16.02	WB	73.3' RT	---	706.21	---	---	---	---	---	---	---	---	---	---	---	---	---	---	---	---	---	---	---	---	---	---
135A	74+75.00	WB	58.1' LT	---	704.94	---	---	---	---	---	---	---	---	---	---	---	---	---	---	---	---	---	---	---	---	---	---
135B	74+75.00	WB	43.1' LT	707.99	704.87	2.62	---	---	---	---	2	---	---	---	---	---	---	---	---	---	---	1	---	---	---	1	---
135C	74+75.00	WB	5.5' RT	710.64	704.62	5.02	---	---	---	1	---	---	---	---	---	---	---	---	---	1	---	---	---	---	---	1	---
135D	74+75.00	WB	16.7' RT	709.91	704.57	4.34	---	---	---	1	---	1	---	---	---	---	---	---	---	---	---	---	---	---	---	1	---
135E	74+75.00	WB	71.6' RT	---	704.29	---	---	---	---	---	---	---	---	---	---	---	---	---	---	---	---	---	---	---	---	---	---
140A	75+37.00	WB	43.1' LT	707.69	705.69	1.50	---	---	---	---	1	---	---	---	---	---	---	---	---	---	---	---	---	---	1	1	---
140B	75+37.00	WB	56.8' LT	---	705.55	---	---	---	---	---	---	---	---	---	---	---	---	---	---	---	---	---	---	---	---	---	---
145A	77+15.80	WB	15.2' RT	708.97	704.97	3.00	---	---	---	1	---	---	---	---	---	---	---	---	---	1	---	---	---	---	---	1	---
145B	76+90.04	WB	16.5' RT	709.09	704.84	3.25	---	---	---	1	---	---	---	---	---	---	---	---	---	1	---	---	---	---	---	1	---
145C	76+90.04	WB	5.5' RT	709.44	704.78	3.66	---	---	---	1	---	---	---	---	---	---	---	---	---	1	---	---	---	---	---	1	---
145D	76+90.04	WB	42.8' LT	708.01	704.54	2.97	---	---	---	---	1	---	---	---	---	---	---	---	---	---	---	---	---	---	1	1	---
145E	76+90.04	WB	61.6' LT	---	704.45	---	---	---	---	---	---	---	---	---	---	---	---	---	---	---	---	---	---	---	---	---	---
150A	79+17.29	WB	63.5' RT	706.65	702.64	3.01	---	---	---	1	---	---	---	---	---	---	---	---	---	1	---	---	---	---	---	1	---
150B	79+17.29	WB	24.5' RT	707.56	702.13	4.43	---	---	---	1	---	---	---	---	---	---	---	---	---	1	---	---	---	---	---	1	---
150C	79+17.29	WB	13.5' RT	708.04	702.08	4.96	---	---	---	1	---	---	---	---	---	---	---	---	---	1	---	---	---	---	---	1	---
150D	79+17.29	WB	33.5' LT	708.92	701.84	6.08	---	---	---	1	---	---	---	1	---	---	---	---	---	---	---	---	---	---	---	1	---
150E	79+63.91	WB	74.4' LT	---	701.53	---	---	---	---	---	---	---	---	---	---	---	---	---	---	---	---	---	---	---	---	---	---
155A	82+18.06	WB	79.6' RT	704.08	701.74	1.84	---	---	---	---	1	---	---	---	---	---	---	---	---	---	1	---	---	---	---	1	---
155B	82+18.06	WB	63.5' RT	705.86	701.58	3.28	---	---	---	1	---	---	---	---	---	---	---	---	---	1	---	---	---	---	---	1	---
155C	82+18.06	WB	24.5' RT	705.42	701.38	3.04	---	---	---	1	---	---	---	---	---	---	---	---	---	1	---	---	---	---	---	1	---
155D	82+18.06	WB	5.5' RT	706.4	701.04	4.36	---	---	---	1	---	---	---	---	---	---	---	---	---	1	---	---	---	---	---	1	---
155E	82+18.06	WB	33.5' LT	705.83	700.84	3.99	---	---	---	1	---	---	---	1	---	---	---	---	---	---	---	---	---	---	---	1	---
155F	82+21.15	WB	67.4' LT	---	700.64	---	---	---	---	---	---	---	---	---	---	---	---	---	---	---	---	---	---	---	---	---	---
160A	83+97.10	WB	63.5' RT	705.28	700.55	3.73	---	---	---	1	---	---	---	---	---	---	---	---	---	1	---	---	---	---	---	1	---
160B	83+97.10	WB	23.5' RT	704.28	700.35	2.93	---	---	---	1	---	---	---	---	---	---	---	---	---	1	---	---	---	---	---	1	---
SUBTOTALS							**0**	**0**	**0**	**28**	**9**	**1**	**2**	**5**	**0**	**3**	**0**	**0**	**2**	**15**	**1**	**3**	**0**	**0**	**2**	**34**	

1. RIM ELEVATIONS ARE GIVEN AT THE FLANGE LINE OF STRUCTURES WITHIN CURB LINES. RIM ELEVATIONS ARE GIVEN AT THE CENTER OF ALL OTHER STRUCTURES.
2. STATIONS AND OFFSETS ARE TO THE CENTER OF STRUCTURES.
3. STRUCTURE DEPTH: RIM ELEV - INVERT ELEV - CASTING HEIGHT - ADJUSTMENT (+ 24" FOR CATCH BASINS)
4. CASTING HEIGHT = 6" FOR TYPE H AND TYPE HM COVERS, 9" FOR TYPE J COVERS, 4" FOR TYPE L COVERS, 0" FOR TYPE MS-A COVERS
5. ADJUSTMENT = 6"

*ADDITIONAL QUANTITIES SHOWN ELSEWHERE. SEE "STORM SEWER STRUCTURES - APRON ENDWALLS" TABLES.

ALL ITEMS CATEGORY 0010 UNLESS NOTED

STORM SEWER STRUCTURES (cont.)

STRUCTURE NUMBER	STATION	ALIGNMENT	OFFSET	RIM ELEV	INVERT ELEV	STR DEPTH FEET	611.0530 MANHOLE COVERS TYPE J EACH	611.0545 MANHOLE COVERS TYPE L EACH	611.0624 INLET COVERS TYPE H EACH	611.0627 INLET COVERS TYPE HM EACH	611.0645 INLET COVERS TYPE MS-A EACH	611.1004 CATCH BASINS 4-FT DIAMETER EACH	611.1005 CATCH BASINS 5-FT DIAMETER EACH	611.1230 CATCH BASINS 2X3-FT EACH	611.2004 MANHOLES 4-FT DIAMETER EACH	611.2005 MANHOLES 5-FT DIAMETER EACH	611.2006 MANHOLES 6-FT DIAMETER EACH	611.2008 MANHOLES 8-FT DIAMETER EACH	611.3004 INLETS 4-FT DIAMETER EACH	611.3230 INLETS 2X3-FT EACH	611.3901 INLETS MEDIAN 1 GRATE EACH	611.3902 INLETS MEDIAN 2 GRATE EACH	611.8110 ADJUSTING MANHOLE COVERS EACH	611.8115 ADJUSTING INLET COVERS EACH	SPV.0060.01 CATCH BASINS MEDIAN 1 GRATE EACH	650.4000 CONSTRUCTION STAKING STORM SEWER EACH	COMMENTS
160C	84+16.55	WB	21.8' RT	704.19	700.00	3.19	---	---	---	1	---	---	---	---	---	---	---	---	1	---	---	---	---	---	---	---	1	---
160D	84+45.97	WB	5.5' RT	704.47	699.83	3.64	---	---	---	1	---	---	---	---	---	---	---	---	1	---	---	---	---	---	---	---	1	---
160E	84+56.09	WB	33.5' LT	703.40	699.93	2.47	---	---	---	1	---	---	---	---	---	---	---	---	---	1	---	---	---	---	---	---	1	---
160F	84+45.97	WB	33.5' LT	703.38	699.38	3.00	---	---	---	1	---	---	---	1	---	---	---	---	---	---	---	---	---	---	---	---	1	---
160G	84+45.97	WB	63.3' LT	---	699.24	---	---	---	---	---	---	---	---	---	---	---	---	---	---	---	---	---	---	---	---	---	---	---
165A	87+15.29	WB	82.6' RT	704.29	700.28	3.01	---	---	---	1	---	---	---	1	---	---	---	---	---	---	---	---	---	---	---	---	1	---
165B	86+94.99	WB	92.1' RT	---	700.10	---	---	---	---	---	---	---	---	---	---	---	---	---	---	---	---	---	---	---	---	---	---	---
170A	87+20.57	WB	16.5' RT	704.12	699.41	3.71	---	---	---	1	---	---	---	---	---	---	---	---	---	1	---	---	---	---	---	---	1	---
170B	87+21.91	WB	9.2' RT	704.33	699.33	4.00	---	---	---	1	---	---	---	---	---	---	---	---	---	1	---	---	---	---	---	---	1	---
170C	87+49.49	WB	41.6' LT	703.1	698.80	3.30	---	---	---	1	---	1	---	---	---	---	---	---	---	---	---	---	---	---	---	---	1	---
170D	87+44.26	WB	64.3' LT	---	698.68	---	---	---	---	---	---	---	---	---	---	---	---	---	---	---	---	---	---	---	---	---	---	---
175A	88+19.91	WB	59.7' LT	702.66	698.66	3.00	---	---	---	1	---	---	---	1	---	---	---	---	---	---	---	---	---	---	---	---	1	---
175B	88+30.63	WB	67.4' LT	---	698.60	---	---	---	---	---	---	---	---	---	---	---	---	---	---	---	---	---	---	---	---	---	---	---
180A	87+91.59	WB	73.6' RT	704.55	700.28	3.27	---	---	---	1	---	---	---	---	---	---	---	---	1	---	---	---	---	---	---	---	1	---
180B	88+20.09	WB	74.2' RT	704.14	699.99	3.15	---	---	---	1	---	1	---	---	---	---	---	---	---	---	---	---	---	---	---	---	1	---
180C	88+27.37	WB	128.9' RT	---	699.71	---	---	---	---	---	---	---	---	---	---	---	---	---	---	---	---	---	---	---	---	---	---	---
185A	90+00.00	WB	13.5' RT	703	699.10	2.90	---	---	---	1	---	---	---	---	---	---	---	---	1	---	---	---	---	---	---	---	1	---
185B	89+70.75	WB	24.5' RT	703.14	698.70	3.44	---	---	---	1	---	---	---	---	---	---	---	---	1	---	---	---	---	---	---	---	1	---
185C	89+60.84	WB	24.5' RT	703.1	699.00	3.10	---	---	---	1	---	---	---	1	---	---	---	---	---	---	---	---	---	---	---	---	1	---
185D	89+60.84	WB	77.9' RT	---	698.33	---	---	---	---	---	---	---	---	---	---	---	---	---	---	---	---	---	---	---	---	---	---	---
190A	90+00.00	WB	33.5' LT	702.27	698.27	3.00	---	---	---	1	---	---	---	---	---	---	---	---	---	1	---	---	---	---	---	---	1	---
190B	90+19.86	WB	33.5' LT	702.21	698.17	3.04	---	---	---	1	---	---	---	1	---	---	---	---	---	---	---	---	---	---	---	---	1	---
190C	89+93.96	WB	61.1' LT	---	697.50	---	---	---	---	---	---	---	---	---	---	---	---	---	---	---	---	---	---	---	---	---	---	---
190	90+19.86	WB	42.5' LT	702.93	697.41	4.69	---	1	---	---	---	---	---	---	---	---	---	---	1	---	---	---	---	---	---	---	1	---
190D	91+88.07	WB	71.7' LT	---	696.92	---	---	---	---	---	---	---	---	---	---	---	---	---	---	---	---	---	---	---	---	---	---	---
195A	93+07.23	WB	24.5' RT	702.86	698.43	3.43	---	---	---	1	---	---	---	---	---	---	---	---	---	1	---	---	---	---	---	---	1	---
195B	93+07.23	WB	5.5' RT	703.5	698.24	4.26	---	---	---	1	---	---	---	---	---	---	---	---	---	1	---	---	---	---	---	---	1	---
195C	93+07.23	WB	43.7' LT	699.93	697.75	1.68	---	---	---	---	1	---	---	---	---	---	---	---	---	---	---	---	---	---	---	1	1	---
195D	93+07.23	WB	57.4' LT	---	697.61	---	---	---	---	---	---	---	---	---	---	---	---	---	---	---	---	---	---	---	---	---	---	---
200A	95+22.78	WB	24.5' RT	701.64	697.58	3.06	---	---	---	1	---	---	---	---	---	---	---	---	---	1	---	---	---	---	---	---	1	---
200B	95+12.86	WB	24.5' RT	701.61	697.28	3.33	---	---	---	1	---	---	---	1	---	---	---	---	---	---	---	---	---	---	---	---	1	---
200C	95+12.86	WB	77.3' RT	---	697.02	---	---	---	---	---	---	---	---	---	---	---	---	---	---	---	---	---	---	---	---	---	---	---
205A	95+64.93	WB	5.5' RT	702.27	697.67	3.60	---	---	---	1	---	---	---	---	---	---	---	---	---	1	---	---	---	---	---	---	1	---
205B	95+54.93	WB	5.5' RT	702.29	697.47	3.82	---	---	---	1	---	---	---	---	---	---	---	---	---	1	---	---	---	---	---	---	1	---
205C	95+54.93	WB	43.6' LT	698.75	696.48	1.77	---	---	---	---	1	---	---	---	---	---	---	---	---	---	---	---	---	---	---	1	1	---
205D	95+54.93	WB	57.6' LT	---	696.34	---	---	---	---	---	---	---	---	---	---	---	---	---	---	---	---	---	---	---	---	---	---	---
210A	98+02.07	WB	24.5' RT	703.28	698.27	4.01	---	---	---	1	---	---	---	---	---	---	---	---	---	1	---	---	---	---	---	---	1	---
210B	98+02.07	WB	5.5' RT	703.59	698.08	4.51	---	---	---	1	---	---	---	---	---	---	---	---	---	1	---	---	---	---	---	---	1	---
210C	98+02.07	WB	43.6' LT	700.02	697.34	2.18	---	---	---	---	1	---	---	---	---	---	---	---	---	---	---	---	---	---	---	1	1	---
210D	98+02.07	WB	58.3' LT	---	697.19	---	---	---	---	---	---	---	---	---	---	---	---	---	---	---	---	---	---	---	---	---	---	---
215A	101+00.06	WB	24.5' RT	705.22	700.83	3.39	---	---	---	1	---	---	---	---	---	---	---	---	---	1	---	---	---	---	---	---	1	---
215B	101+00.06	WB	5.5' RT	705.37	700.64	3.73	---	---	---	1	---	---	---	---	---	---	---	---	---	1	---	---	---	---	---	---	1	---
215C	101+00.06	WB	43.1' LT	702.65	699.90	2.25	---	---	---	---	1	---	---	---	---	---	---	---	---	---	---	---	---	---	---	1	1	---
215D	101+00.06	WB	58.6' LT	---	699.75	---	---	---	---	---	---	---	---	---	---	---	---	---	---	---	---	---	---	---	---	---	---	---
220A	104+00.06	WB	63.5' RT	706.9	702.61	3.29	---	---	---	1	---	---	---	---	---	---	---	---	---	1	---	---	---	---	---	---	1	---
220B	104+00.06	WB	24.5' RT	707.14	702.41	3.73	---	---	---	1	---	---	---	---	---	---	---	---	---	1	---	---	---	---	---	---	1	---
220C	104+00.06	WB	5.5' RT	707.30	702.07	4.23	---	---	---	1	---	---	---	---	---	---	---	---	---	1	---	---	---	---	---	---	1	---
220D	104+00.06	WB	43.1' LT	704.70	701.82	2.38	---	---	---	---	1	---	---	---	---	---	---	---	---	---	---	---	---	---	---	1	1	---
220E	104+00.06	WB	61.0' LT	---	701.65	---	---	---	---	---	---	---	---	---	---	---	---	---	---	---	---	---	---	---	---	---	---	---
221A	105+87.50	WB	43.1' LT	705.88	703.36	2.02	---	---	---	---	1	---	---	---	---	---	---	---	---	---	---	---	---	---	---	1	1	---
SUBTOTALS							**0**	**1**	**0**	**29**	**6**	**2**	**0**	**6**	**0**	**0**	**0**	**1**	**5**	**16**	**0**	**0**	**0**	**0**	**6**	**36**	

1. RIM ELEVATIONS ARE GIVEN AT THE FLANGE LINE OF STRUCTURES WITHIN CURB LINES. RIM ELEVATIONS ARE GIVEN AT THE CENTER OF ALL OTHER STRUCTURES.
2. STATIONS AND OFFSETS ARE TO THE CENTER OF STRUCTURES.
3. STRUCTURE DEPTH: RIM ELEV - INVERT ELEV - CASTING HEIGHT - ADJUSTMENT (+ 24" FOR CATCH BASINS)
4. CASTING HEIGHT = 6" FOR TYPE H AND TYPE HM COVERS, 9" FOR TYPE J COVERS, 4" FOR TYPE L COVERS, 0" FOR TYPE MS-A COVERS
5. ADJUSTMENT = 6"

*ADDITIONAL QUANTITIES SHOWN ELSEWHERE. SEE "STORM SEWER STRUCTURES - APRON ENDWALLS" TABLES.

ALL ITEMS CATEGORY 0010 UNLESS NOTED

3

STORM SEWER STRUCTURES (cont.)

STRUCTURE NUMBER	STATION	ALIGNMENT	OFFSET	RIM ELEV	INVERT ELEV	STR DEPTH FEET	611.0530 MANHOLE COVERS TYPE J EACH	611.0545 MANHOLE COVERS TYPE L EACH	611.0624 INLET COVERS TYPE H EACH	611.0627 INLET COVERS TYPE HM EACH	611.0645 INLET COVERS TYPE MS-A EACH	611.1004 CATCH BASINS 4-FT DIAMETER EACH	611.1005 CATCH BASINS 5-FT DIAMETER EACH	611.1230 CATCH BASINS 2X3-FT EACH	611.2004 MANHOLES 4-FT DIAMETER EACH	611.2005 MANHOLES 5-FT DIAMETER EACH	611.2006 MANHOLES 6-FT DIAMETER EACH	611.2008 MANHOLES 8-FT DIAMETER EACH	611.3004 INLETS 4-FT DIAMETER EACH	611.3230 INLETS 2X3-FT EACH	611.3901 INLETS MEDIAN 1 GRATE EACH	611.3902 INLETS MEDIAN 2 GRATE EACH	611.8110 ADJUSTING MANHOLE COVERS EACH	611.8115 ADJUSTING INLET COVERS EACH	SPV.0060.01 CATCH BASINS MEDIAN 1 GRATE EACH	650.4000 CONSTRUCTION STAKING STORM SEWER EACH	COMMENTS
221B	105+87.63	WB	60.8' LT	---	703.18	---	---	---	---	---	---	---	---	---	---	---	---	---	---	---	---	---	---	---	---	---	---
225A	110+00.06	WB	63.5' RT	707.03	702.73	3.30	---	---	---	1	---	---	---	---	---	---	---	---	---	1	---	---	---	---	---	1	---
225B	110+00.06	WB	24.5' RT	707.27	702.54	3.73	---	---	---	1	---	---	---	---	---	---	---	---	---	1	---	---	---	---	---	1	---
225C	110+00.06	WB	5.5' RT	707.46	702.19	4.27	---	---	---	1	---	---	---	---	---	---	---	---	---	1	---	---	---	---	---	1	---
225D	110+00.06	WB	43.1' LT	704.86	701.95	2.41	---	---	---	---	1	---	---	---	---	---	---	---	---	---	---	---	---	---	1	1	---
225E	110+00.06	WB	61.1' LT	---	701.77	---	---	---	---	---	---	---	---	---	---	---	---	---	---	---	---	---	---	---	---	---	---
230A	112+95.06	WB	63.5' RT	703.07	699.40	2.67	---	---	---	1	---	---	---	---	---	---	---	---	---	1	---	---	---	---	---	1	---
230B	112+95.06	WB	24.5' RT	703.31	699.21	3.10	---	---	---	1	---	---	---	---	---	---	---	---	---	1	---	---	---	---	---	1	---
230C	112+95.06	WB	5.5' RT	703.45	698.86	3.59	---	---	---	1	---	---	---	---	---	---	---	---	---	1	---	---	---	---	---	1	---
230D	112+95.06	WB	43.1' LT	700.87	698.62	1.75	---	---	---	---	1	---	---	---	---	---	---	---	---	---	---	---	---	---	1	1	---
230E	112+95.06	WB	57.7' LT	---	698.55	---	---	---	---	---	---	---	---	---	---	---	---	---	---	---	---	---	---	---	---	---	---
600A	608+53.42	38TH	17.5' LT	704.58	700.97	2.61	---	---	1	---	---	---	---	1	---	---	---	---	---	---	---	---	---	---	---	1	---
600B	608+53.42	38TH	30.1' LT	---	700.91	---	---	---	---	---	---	---	---	---	---	---	---	---	---	---	---	---	---	---	---	---	---
605A	608+53.42	38TH	29.5' RT	704.34	701.80	1.54	---	---	1	---	---	---	---	1	---	---	---	---	---	---	---	---	---	---	---	1	---
605B	608+53.42	38TH	37.3' RT	---	701.76	---	---	---	---	---	---	---	---	---	---	---	---	---	---	---	---	---	---	---	---	---	---
SUBTOTALS							**0**	**0**	**2**	**6**	**2**	**0**	**0**	**2**	**0**	**0**	**0**	**0**	**0**	**6**	**0**	**0**	**0**	**0**	**2**	**10**	
PROJECT TOTAL							**7**	**1**	**2**	**113**	**27**	**3**	**2**	**21**	**5**	**3**	**1**	**1**	**10**	**76**	**1**	**3**	**11**	**2**	**20**	**146**	

1. RIM ELEVATIONS ARE GIVEN AT THE FLANGE LINE OF STRUCTURES WITHIN CURB LINES. RIM ELEVATIONS ARE GIVEN AT THE CENTER OF ALL OTHER STRUCTURES.
2. STATIONS AND OFFSETS ARE TO THE CENTER OF STRUCTURES.
3. STRUCTURE DEPTH: RIM ELEV - INVERT ELEV - CASTING HEIGHT - ADJUSTMENT (+ 24" FOR CATCH BASINS)
4. CASTING HEIGHT = 6" FOR TYPE H AND TYPE HM COVERS, 9" FOR TYPE J COVERS, 4" FOR TYPE L COVERS, 0" FOR TYPE MS-A COVERS
5. ADJUSTMENT = 6"

*ADDITIONAL QUANTITIES SHOWN ELSEWHERE. SEE "STORM SEWER STRUCTURES - APRON ENDWALLS" TABLES.

ALL ITEMS CATEGORY 0010 UNLESS NOTED

EROSION CONTROL

LOCATION	606.0200 RIPRAP MEDIUM CY	628.1104 EROSION BALES EACH	628.1504 SILT FENCE LF	628.1520 SILT FENCE MAINTENANCE LF	628.1905 MOBILIZATIONS EROSION CONTROL EACH	628.1910 MOBILIZATIONS EMERGENCY EROSION CONTROL EACH	628.2004 EROSION MAT CLASS I TYPE B SY	628.2027 EROSION MAT CLASS II TYPE C SY	628.6005 TURBIDITY BARRIERS SY	628.7005 INLET PROTECTION TYPE A EACH	628.7010 INLET PROTECTION TYPE B EACH	628.7015 INLET PROTECTION TYPE C EACH	628.7020 INLET PROTECTION TYPE D EACH	628.7504 TEMPORARY DITCH CHECKS LF	628.7515.S STONE OR ROCK DITCH CHECKS CY	628.7555 CULVERT PIPE CHECKS EACH	628.7560 TRACKING PADS EACH	628.7570 ROCK BAGS EACH	645.0120 GEOTEXTILE TYPE HR SY	SPV.0090.01 SILT FENCE HEAVY DUTY LF
CTH S																				
27+25 - 32+00	---	---	252	1,008	---	---	543	---	---	12	4	10	---	---	---	---	1	---	---	---
32+00 - 38+00	---	---	147	2,188	---	---	2,348	---	---	9	2	9	---	---	---	10	---	---	---	400
38+00 - 44+00	---	---	230	1,264	---	---	1,865	701	415	17	1	6	10	32	---	20	---	---	---	86
44+00 - 50+00	---	---	285	1,352	---	---	1,974	---	---	8	2	6	---	64	---	3	---	---	---	53
50+00 - 56+00	---	---	164	656	---	---	932	---	---	8	---	8	---	---	---	---	---	---	---	---
56+00 - 62+00	---	---	72	288	---	---	3,087	---	---	7	1	4	2	112	---	4	---	---	---	---
62+00 - 68+00	---	---	132	1,032	---	---	1,508	216	---	7	---	1	6	10	---	16	---	34	---	126
68+00 - 74+00	---	---	292	2,588	---	---	1,236	880	---	9	1	8	---	16	---	6	---	34	---	355
74+00 - 80+00	---	---	---	980	---	---	2,375	199	---	12	2	9	1	16	---	10	---	34	---	245
80+00 - 86+00	---	---	---	---	---	---	1,902	594	---	11	---	3	8	16	---	7	---	---	---	---
86+00 - 92+00	15	---	---	---	---	---	2,218	---	---	12	---	3	9	32	---	29	---	---	41	---
92+00 - 98+00	17	---	---	---	---	---	1,840	1,113	---	11	2	4	5	48	---	20	---	---	46	---
98+00 - 104+00	---	---	224	896	---	---	2,375	352	---	7	2	5	---	48	---	2	---	---	---	---
104+00 - 110+00	---	---	350	2,208	---	---	1,100	340	---	5	1	3	1	16	---	1	---	---	---	202
110+00 - 113+00	---	---	300	1,200	---	---	590	---	---	4	1	3	---	16	---	---	1	---	---	---
102ND AVE																				
401+14 - 403+50	---	---	---	---	---	---	414	---	---	---	---	---	---	20	---	6	1	---	---	---
100TH AVE																				
501+14 - 503+50	---	---	---	---	---	---	650	---	---	---	---	---	---	---	---	2	1	---	---	---
38TH ST / 96TH AVE CONNECTOR / 96TH AVE																				
608+20 - 609+00	---	---	---	---	---	---	---	---	---	2	---	---	2	---	---	---	1	---	---	---
611+50 - 615+40	---	---	---	---	---	---	517	---	---	---	---	---	---	---	---	3	---	---	---	---
700+00 - 701+74	---	---	---	---	---	---	203	---	---	---	---	---	---	30	---	---	---	---	---	---
UNDISTRIBUTED	18	1,000	615	3,915	15	10	6,870	1,100	85	40	5	25	15	115	50	35	15	98	25	370
PROJECT TOTAL	**50**	**1,000**	**3,063**	**19,575**	**15**	**10**	**34,547**	**5,495**	**500**	**181**	**24**	**107**	**59**	**591**	**50**	**174**	**20**	**200**	**112**	**1,837**

ALL ITEMS CATEGORY 0010 UNLESS NOTED

RESTORATION

LOCATION	625.0500 SALVAGED TOPSOIL SY	627.0200 MULCHING SY	628.6505 SOIL STABILIZER TYPE A ACRE	628.6210 SOIL STABILIZER TYPE B ACRE	629.0210 FERTILIZER TYPE B CWT	630.0110 SEEDING MIXTURE NO. 10 LB	630.0130 SEEDING MIXTURE NO. 30 LB	630.0175 SEEDING MIXTURE NO. 75 LB	630.0200 TEMPORARY LB	630.0300 BORROW PIT LB	630.0500 SEED WATER MGAL	631.0300 SOD WATER MGAL	631.1000 SOD LAWN SY	SPV.0180.01 STORMWATER TREATMENT FILTER STRIPS SY
CTH S														
27+25 - 38+00	7,050	773	---	---	4.5	25	34	---	25	---	160	18	775	---
38+00 - 53+00	10,865	2,299	---	---	6.9	57	47	6	46	---	245	71	3,160	906
53+00 - 67+00	11,530	3,281	---	---	7.3	58	80	6	59	---	260	63	2,765	870
67+00 - 81+00	9,480	1,336	---	---	6.0	47	69	4	49	---	215	44	1,945	634
81+00 - 95+00	17,790	7,389	---	---	11.2	150	48	6	93	---	405	64	2,810	923
95+00 - 109+00	13,030	1,934	---	---	8.3	50	89	4	58	---	295	65	2,890	480
109+00 - 113+00	3,620	1,592	---	---	2.3	20	13	4	15	---	85	21	915	586
102ND AVE														
401+14 - 403+50	1,500	603	---	---	1.0	17	---	---	9	---	35	---	---	---
100TH AVE														
501+14 - 503+50	1,435	221	---	---	1.0	17	---	---	9	---	35	---	---	---
38TH ST / 96TH AVE CONNECTOR / 96TH AVE														
608+20 - 609+00	390	339	---	---	0.3	6	---	---	3	---	10	3	110	---
611+50 - 615+40	2,105	938	---	---	1.4	26	---	2	13	---	50	---	---	208
700+00 - 701+74	490	285	---	---	0.4	7	---	---	4	---	15	---	---	---
UNDISTRIBUTED	19,700	5,175	10	10	15	120	95	10	1,000	300	450	85	3,845	460
PROJECT TOTAL	**98,985**	**26,165**	**10**	**10**	**65.6**	**600**	**475**	**42**	**1,383**	**300**	**2,260**	**434**	**19,215**	**5,067**

GUARDRAIL

LOCATION	614.092 SALVAGED RAIL LF	614.0925 SALVAGED GUARDRAIL END TREATMENTS EACH	614.2300 MGS GUARDRAIL 3 LF	614.2500 MGS THRIE BEAM TRANSITION LF	614.2610 MGS GUARDRAIL TERMINAL EAT EACH
CTH S					
27+25 - 38+00	---	---	---	---	---
38+00 - 53+00	315	4	425	236	6
53+00 - 67+00	---	---	---	---	---
67+00 - 81+00	---	---	---	---	---
81+00 - 95+00	---	---	---	---	---
95+00 - 109+00	---	---	---	---	---
109+00 - 113+00	---	---	---	---	---
102ND AVE					
401+14 - 403+50	---	---	---	---	---
100TH AVE					
501+14 - 503+50	---	---	---	---	---
38TH ST / 96TH AVE CONNECTOR / 96TH AVE					
608+20 - 609+00	---	---	---	---	---
611+50 - 615+40	---	---	---	---	---
PROJECT TOTAL	**315**	**4**	**425**	**236**	**6**

ALL ITEMS CATEGORY 0010 UNLESS NOTED

TRAFFIC CONTROL

LOCATION	* ESTIMATED DURATION CALENDAR DAYS	643.0300 DRUMS * EACH	643.0300 DRUMS DAYS	643.0420 BARRICADES TYPE III * EACH	643.0420 BARRICADES TYPE III DAYS	643.0500 FLEXIBLE TUBULAR MARKER POSTS EACH	643.0600 FLEXIBLE TUBULAR MARKER BASES EACH	643.0705 WARNING LIGHTS TYPE A * EACH	643.0705 WARNING LIGHTS TYPE A DAYS	643.0900 SIGNS * EACH	643.0900 SIGNS DAYS	643.0920 COVERING SIGNS TYPE II EACH	643.1000 SIGNS FIXED MESSAGE SF	643.1050 SIGNS PCMS * EACH	643.1050 SIGNS PCMS DAYS	643.5000 TRAFFIC CONTROL EACH	611.8120.S COVER PLATES TEMPORARY EACH
STAGE 1A	91	35	3,185	10	910	71	71	20	1,820	212	19,292	2	42	2	28	---	---
STAGE 1B	14	35	490	15	210	73	73	30	420	218	3,052	---	---	1	14	---	---
WINTER SHUTDOWN	135	172	23,220	17	2,295	---	---	34	4,590	17	2,295	---	---	1	14	---	---
STAGE 2A	3	---	---	10	30	---	---	20	60	216	648	2	65	1	14	---	---
STAGE 2B	61	12	732	14	854	64	64	28	1,708	217	13,237	---	---	1	14	---	---
STAGE 3	14	112	1,568	19	266	---	---	38	532	221	3,094	---	---	1	14	---	---
UNDISTRIBUTED	---	40	640	10	160	15	15	10	160	115	1,830	---	---	5	80	---	10
PROJECT TOTAL	**318**		**29,835**		**4,725**	**223**	**223**		**9,290**		**43,448**	**4**	**107**		**178**	**1**	**10**

* FOR INFORMATION ONLY

PAVEMENT MARKING

LOCATION	646.1020 LINE EPOXY 4-INCH WHITE LF	646.1020 LINE EPOXY 4-INCH YELLOW LF	646.3020 LINE EPOXY 8-INCH WHITE LF	646.5020 ARROW EPOXY TYPE 2 WHITE EACH	646.5020 ARROW EPOXY TYPE 3 WHITE EACH	646.5120 WORD EPOXY WHITE EACH	646.6120 STOP LINE EPOXY 18-INCH WHITE LF	646.7120 DIAGONAL EPOXY 12-INCH WHITE LF	646.7420 CROSSWALK EPOXY TRANSVERSE LINE WHITE LF	646.8120 CURB EPOXY YELLOW LF	646.8220 ISLAND NOSE EPOXY YELLOW EACH	646.9010 REMOVAL WATER BLASTING LINE 4-INCH LF	646.9110 REMOVAL WATER BLASTING LINE 8-INCH LF	646.9310 REMOVAL SPECIAL MARKING WATER BLASTING EACH
CTH S														
27+25 - 41+50	3,626	2,501	972	11	---	3	70	---	---	192	4	---	---	---
41+50 - 56+75	3,823	3,057	179	1	---	---	---	---	---	---	---	---	---	---
56+75 - 72+00	3,698	2,800	326	4	---	1	---	---	99	72	2	---	---	---
72+00 - 87+00	3,648	2,748	548	6	---	2	---	---	93	89	2	---	---	---
87+00 - 102+00	3,501	2,766	362	2	---	1	---	134	129	47	2	---	---	---
102+00 - 113+00	2,750	2,200	---	---	---	---	---	---	---	---	---	---	---	---
102ND AVE														
401+00 - 403+50	487	521	---	---	---	---	17	---	---	---	---	---	---	---
100TH AVE														
501+00 - 503+50	477	521	---	---	---	---	16	---	---	---	---	---	---	---
38TH ST / 96TH AVE CONNECTOR / 96TH AVE														
608+20 - 609+85	350	396	433	2	1	1	29	---	---	---	---	68	68	3
611+45 - 615+40	651	831	---	---	---	---	29	---	---	---	---	---	---	---
SUBTOTAL	23,010	18,341	---	26	1	---	---	---	---	---	---	---	---	---
PROJECT TOTAL	**41,351**		**2,820**	**27**		**8**	**161**	**134**	**321**	**400**	**10**	**68**	**68**	**3**

ALL ITEMS CATEGORY 0010 UNLESS NOTED

TEMPORARY PAVEMENT MARKING

LOCATION	646.9000 LINE 4-INCH LF	646.9100 MARKING REMOVAL LINE 8-INCH LF	646.9200 MARKING REMOVAL LINE WIDE LF	646.9300 MARKING REMOVAL SPECIAL MARKING EACH	649.0105 PAINT 4-INCH WHITE LF	649.0105 PAINT 4-INCH YELLOW LF	649.0150 REMOVABLE TAPE 4-INCH WHITE LF	649.0150 REMOVABLE TAPE 4-INCH YELLOW LF	649.0250 REMOVABLE TAPE 8-INCH LF	649.0550 ARROW REMOVABLE TAPE TYPE 2 EACH	649.0650 WORD REMOVABLE TAPE EACH	649.0805 STOP LINE PAINT 18-INCH LF	649.0850 STOP LINE REMOVABLE TAPE 18-INCH LF	649.0960 REMOVABLE MASK OUT TAPE 6-INCH LF	649.0970 REMOVABLE MASK OUT TAPE 10-INCH LF
CTH S															
STAGE 1A	162	63	38	1	---	3,262	---	---	---	---	---	---	---	---	---
STAGE 1B	800	---	176	---	73	---	---	---	---	2	1	24	---	---	---
WINTER SHUTDOWN	---	---	---	---	21,438	17,150	---	---	---	---	---	---	---	---	---
STAGE 2A	---	---	---	---	---	---	---	---	---	---	---	---	---	---	---
STAGE 2B	---	---	---	---	---	---	4,884	4,860	200	5	2	---	28	---	---
STAGE 3	---	---	---	---	---	---	---	---	---	---	---	---	---	---	---
38TH ST / 96TH AVE CONNECTOR / 96TH AVE															
STAGE 1A	90	145	38	1	275	350	292	606	---	---	---	---	---	747	189
STAGE 1B	254	---	---	1	178	42	237	236	---	---	---	24	---	200	---
STAGE 2A	---	---	---	---	---	---	---	---	---	---	---	---	---	---	---
STAGE 2B	---	---	---	---	---	---	264	360	27	---	---	---	39	---	---
STAGE 3	---	---	---	---	---	---	---	---	209	---	---	---	---	---	---
SUBTOTAL	---	---	---	---	21,964	20,804	5,677	6,062	---	---	---	---	---	---	---
PROJECT TOTAL	**1,306**	**208**	**252**	**3**	**42,768**		**11,739**		**436**	**7**	**3**	**48**	**67**	**947**	**189**

CONSTRUCTION STAKING

LOCATION	650.4500 SUBGRADE LF	650.5000 BASE LF	650.5500 CURB GUTTER AND CURB AND GUTTER LF	650.6500 STRUCTURE LAYOUT B-30-149 LS	650.9000 CURB RAMPS EACH	650.9910 SUPPLEMENTAL CONTROL RD16-003 LS	650.9920 SLOPE STAKES LF
CTH S							
27+25 - 38+00	2,150	2,150	4,244	---	---	---	2,150
38+00 - 53+00	3,000	3,000	4,718	---	---	---	3,000
53+00 - 67+00	2,800	2,800	3,579	---	---	---	2,800
67+00 - 81+00	2,800	2,800	3,786	---	4	---	2,800
81+00 - 95+00	2,800	2,800	4,795	---	2	---	2,800
95+00 - 109+00	2,800	2,800	3,520	---	---	---	2,800
109+00 - 113+00	800	800	1,203	---	---	---	800
102ND AVE							
401+14 - 403+50	---	236	---	---	---		236
100TH AVE							
501+14 - 503+50	---	236	---	---	---		236
38TH ST / 96TH AVE CONNECTOR / 96TH AVE							
608+20 - 609+00	---	80	146	---	---	---	80
611+50 - 615+40	---	390	92	---	---	---	390
700+00 - 701+74	---	148	---	---	---	---	148
PROJECT TOTAL	**17,150**	**18,240**	**26,083**	**1**	**6**	**1**	**18,240**

SAWING

LOCATION	690.0150 ASPHALT LF	690.0250 CONCRETE LF
CTH S		
27+25 - 38+00	43	137
38+00 - 53+00	84	42
53+00 - 67+00	68	30
67+00 - 81+00	---	21
81+00 - 95+00	---	60
95+00 - 109+00	26	---
109+00 - 113+00	35	---
102ND AVE		
401+14 - 403+50	20	26
100TH AVE		
501+14 - 503+50	38	---
38TH ST / 96TH AVE CONNECTOR / 96TH AVE		
608+20 - 609+00	---	49
611+50 - 615+40	54	---
700+00 - 701+74	37	---
PROJECT TOTAL	**405**	**365**

ALL ITEMS CATEGORY 0010 UNLESS NOTED

PROJECT NUMBER	SHEET NUMBER	TOTAL SHEETS
RD16-003		
FEDERAL PROJECT NUMBER	4.1	

PLAT OF RIGHT OF WAY REQUIRED FOR

CTH S

120TH AVE TO CTH H

CTH S KENOSHA CO.

CONSTRUCTION NO.

CONVENTIONAL ABBREVIATIONS

ACCESS POINT/ DRIVEWAY CONNECTION	AP	REFERENCE LINE	R/L
ACCESS RIGHTS	AR	RELEASE OF RIGHTS	ROR
ACRES	AC.	REMAINING	REM.
AND OTHERS	ET.AL.	RIGHT-OF-WAY	R/W
CENTERLINE	C/L	SECTION	SEC.
CERTIFIED SURVEY MAP	CSM	SQUARE FEET	S.F.
CORNER	COR.	STATION	STA.
DOCUMENT	DOC.	TEMPORARY LIMITED EASEMENT	TLE
EASEMENT	EASE.	VOLUME	V.
HIGHWAY EASEMENT	H.E.		
LAND CONTRACT	LC		
MARKER POST	MP		
MONUMENT	MON.		
PAGE	P.		
PERMANENT LIMITED EASEMENT	PLE		
PROPERTY LINE	PL		
RECORDED AS	(100')		

CURVE DATA

LONG CHORD	LCH
LONG CHORD BEARING	LCB
RADIUS	R
DEGREE OF CURVE	D
CENTRAL ANGLE OR DELTA	DELTA
LENGTH OF CURVE	L
TANGENT	TAN

CONVENTIONAL SYMBOLS

FOUND IRON PIPE/PIN	Ø (1" UNLESS NOTED)	PROPOSED R/W LINE	
		EXISTING H.E. LINE	
R/W MONUMENT	●(SET)	PROPERTY LINE	
R/W STANDARD	▲(SET)	LOT & TIE LINES	
SIGN	SIGN	SLOPE INTERCEPTS	
SECTION CORNER MONUMENT		CORPORATE LIMITS	
SECTION CORNER SYMBOL		RESTRICTED ACCESS (BY PREVIOUS ACQUISITION/CONTROL)	
FEE (HATCH VARIES)		RESTRICTED ACCESS (BY ACQUISITION)	
TEMPORARY LIMITED EASEMENT		NO ACCESS (BY STATUTORY AUTHORITY)	
PERMANENT LIMITED EASEMENT		SECTION LINE	
R/W BOUNDARY POINT	RWB20	QUARTER LINE	
PARCEL NUMBER	102	SIXTEENTH LINE	
UTILITY PARCEL NUMBER	92	EXISTING CENTERLINE	
SIGN NUMBER (OFF PREMISE)	21-1	PROPOSED REFERENCE LINE	
BUILDING		PARALLEL OFFSET	

CONVENTIONAL UTILITY SYMBOLS

WATER	W	
GAS	G	
TELEPHONE	T	
OVERHEAD TRANSMISSION LINES	OH	
ELECTRIC	E	
CABLE TELEVISION	TV	
FIBER OPTIC	FO	
SANITARY SEWER	SAN	
STORM SEWER	SS	
	NON COMPENSABLE	COMPENSABLE
POWER POLE		
TELEPHONE POLE		
TELEPHONE PEDESTAL		
ELECTRIC TOWER		

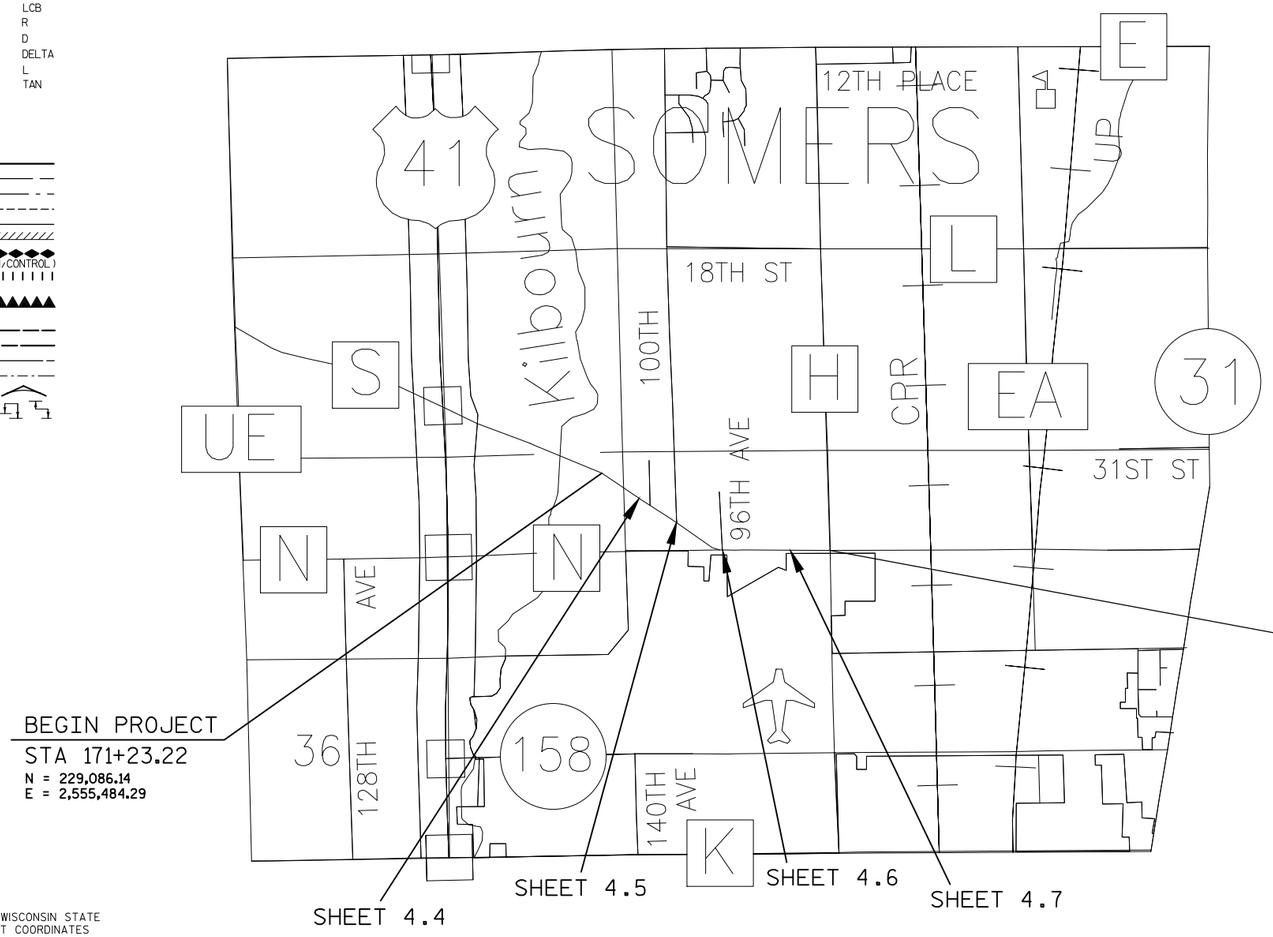

BEGIN PROJECT
STA 171+23.22
N = 229,086.14
E = 2,555,484.29

END PROJECT
STA 235+70.76
N = 227,085.45
E = 2,561,328.42

NOTES:

COORDINATES AND BEARINGS ON THIS PLAT ARE REFERENCED TO THE WISCONSIN STATE PLANE COORDINATE SYSTEM (WSPCS), SOUTH ZONE, (NAD-27). ALL PLAT COORDINATES AND DISTANCES ARE GROUND AND MAY BE CONVERTED TO GRID BY APPLYING THE COMBINED CONVERSION FACTOR OF (0.99999605) AS PUBLISHED ON SEWRPC CONTROL SURVEY SUMMARY DIAGRAM WITH A REVISED DATE OF JANUARY 2015.

RIGHT-OF-WAY MONUMENTS ARE TYPE 2 AND WILL BE PLACED PRIOR TO THE COMPLETION OF THE PROJECT.

FOR THE LATEST ACCESS/DRIVEWAY INFORMATION CONTACT KENOSHA COUNTY,

RIGHT-OF-WAY BOUNDARIES ARE DEFINED WITH COURSES OF THE PERIMETER OF THE HIGHWAY LANDS REFERENCED TO THE U.S. PUBLIC LAND SURVEY SYSTEM OR OTHER "SURVEYS OF PUBLIC RECORD".

A **TEMPORARY LIMITED EASEMENT** (TLE) IS A RIGHT FOR CONSTRUCTION PURPOSES, AS DEFINED HEREIN, INCLUDING THE RIGHT TO OPERATE NECESSARY EQUIPMENT THEREON AND THE RIGHT OF INGRESS AND EGRESS, AS LONG AS REQUIRED FOR SUCH PUBLIC PURPOSE, INCLUDING THE RIGHT TO PRESERVE, PROTECT, REMOVE, OR PLANT THEREON ANY VEGETATION THAT THE HIGHWAY AUTHORITIES MAY DEEM NECESSARY OR DESIRABLE. ALL TLE'S ARE TO EXPIRE AT THE COMPLETION OF THE CONSTRUCTION PROJECT FOR WHICH THIS INSTRUMENT IS GIVEN

A **PERMANENT LIMITED EASEMENT** (PLE) IS A RIGHT FOR CONSTRUCTION AND MAINTENANCE PURPOSES, AS DEFINED HEREIN, INCLUDING THE RIGHT TO OPERATE NECESSARY EQUIPMENT THEREON AND THE RIGHT OF INGRESS AND EGRESS, AS LONG AS REQUIRED FOR SUCH PUBLIC PURPOSE, INCLUDING THE RIGHT TO PRESERVE, PROTECT, REMOVE, OR PLANT THEREON ANY VEGETATION THAT THE HIGHWAY AUTHORITIES MAY DEEM NECESSARY OR DESIRABLE. BUT WITHOUT PREJUDICE TO THE OWNER'S RIGHT TO MAKE OR CONSTRUCT IMPROVEMENT ON SAID LANDS OR TO FLATTEN THE SLOPES, PROVIDING SAID ACTIVITIES WILL NOT IMPAIR OR OTHERWISE ADVERSELY AFFECT THE HIGHWAY FACILITIES.

LAYOUT
NO SCALE

TOTAL NET LENGTH OF CENTERLINE = 1.2 MI.

ORIGINAL PLAT PREPARED BY

raSmith
CREATIVITY BEYOND ENGINEERING
16745 W. Bluemound Road, Brookfield WI 53005
262-781-1000 Fax 262-781-8466
www.rasmithnational.com

WISCONSIN
NATHAN A. VAUGHN
S-2986
DOUSMAN WI
LAND SURVEYOR

DATE: 3/01/18 LAND SURVEYOR

REVISION DATE
03/20/2018
06/20/2018
06/25/2018
06/28/2018
08/06/2019 (6)

KENOSHA COUNTY

APPROVED BY COUNTY:

DATE: _____ _____ (Signature)

231

E

FILE NAME:S/5166978/DWG/32000000/PLAT/SP100.DWG

4

4

SCHEDULE OF LANDS & INTERESTS REQUIRED

AREAS SHOWN IN THE TOTAL ACRES COLUMN MAY BE APPROXIMATE AND ARE DERIVED FROM TAX ROLLS OR OTHER AVAILABLE SOURCES AND MAY NOT INCLUDE LANDS OF THE OWNER WHICH ARE NOT CONTIGUOUS TO THE AREA TO BE ACQUIRED.

PARCEL NUMBER	SHEET NUMBER	OWNER(S)	INTEREST REQUIRED	TOTAL ACRES	R/W REQUIRED ACRES			TOTAL REMAINING ACRES	T.L.E. TEMP. ACRES	P.L.E. PERM. ACRES	PARCEL NUMBER
					NEW	EXISTING	TOTAL				
1	4.4	DAVID M. RUDZINSKI	FEE	0.605	0.480	0.125	0.605	0.000	-	-	1
2	4.4	BRETT R. HALL	FEE	0.410	0.410	-	0.410	0.000	-	-	2
3	4.5	MILDRED M. WEBER FAMILY TRUST	FEE, TLE	4.766	0.901	0.857	1.758	3.008	0.152	-	3
4	4.5	FRED KEVEK	FEE	0.906	0.630	0.276	0.906	0.000	-	-	4
5	4.5	PETER V. TAPPA	FEE	1.119	1.000	0.119	1.119	0.000	-	-	5
6	4.5	ELEODORO PACHECO	FEE, TLE	2.194	0.369	0.113	0.482	1.712	0.051	-	6
7	4.5	BERNARD C. CHENEY	FEE	1.393	1.393	-	1.393	0.000	-	-	7
8	4.6	CAPPO TOSTO INVESTMENTS, LLC.	FEE, TLE	4.560	1.118	0.107	1.225	3.335	0.044	-	8
9	4.6	DELFRATE FAMILY REVOCABLE TRUST	FEE	0.632	0.585	0.047	0.632	0.000	-	-	9
10	4.6	KAY M. RIGERT	FEE	0.322	0.322	-	0.322	0.000	-	-	10
11	4.6	JEFFREY T. WHITTIER	FEE	0.450	0.340	0.110	0.450	0.000	-	-	11
12	4.6	CYRUS W. PERKINS	FEE	0.219	0.219	-	0.219	0.000	-	-	12
13	4.6	COREY W. PERKINS	FEE	0.721	0.542	0.179	0.721	0.000	-	-	13
14	4.6	BRANDON C. BOOTH	FEE	0.631	0.610	0.021	0.631	0.000	-	-	14
15 (6)	4.7	RONALD F. RINALDI	FEE, TLE	0.780	0.397	0.225	0.622	0.158	0.158	-	15 (6)
16	4.7	RONALD F. RINALDI	FEE, TLE	5.012	0.751	0.422	1.173	3.839	0.318	-	16
UTILITY NUMBER											
500	4.4, 4.5, 4.6	RELEASE OF RIGHTS									

REVISION DATE: 03/20/2018 06/28/2018 06/20/2018 08/06/2019 (6) 06/25/2018	DATE: 03/01/2018	SCALE, FEET 0 N/A N/A	HWY: CTH S	PROJECT NUMBER: RD16-003	PLAT SHEET: 4.2	
	GRID FACTOR: N/A		COUNTY: KENOSHA	CONSTRUCTION PROJECT NUMBER:	PS&E SHEET: 232	E

GN

N

30

T-2-N
R-22-E

29

VILLAGE OF SOMERS

4.4

4.5

4.6

4.7

102ND AVE

100TH AVE

96TH AVE

CTH-S

38TH ST

TOWN OF SOMERS

CITY OF KENOSHA

30

29

REVISION DATE: 08/06/2019 N.C.	DATE: 03/01/2018	SCALE, FEET NOT TO SCALE	HWY: CTH S	PROJECT NUMBER: RD16-003	PLAT SHEET: 4.3	
	GRID FACTOR: N/A		COUNTY: KENOSHA	CONSTRUCTION PROJECT NUMBER:	PS&E SHEET: 233	E

FILE NAME:S/5166184/DWG/32000102/PLAT/SPP100.DWG

USH 45 3210-00-05 4.3

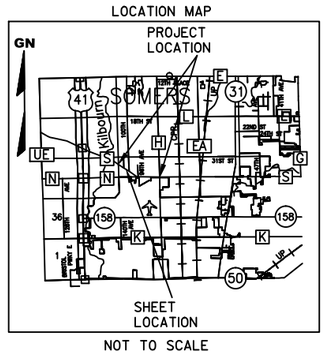

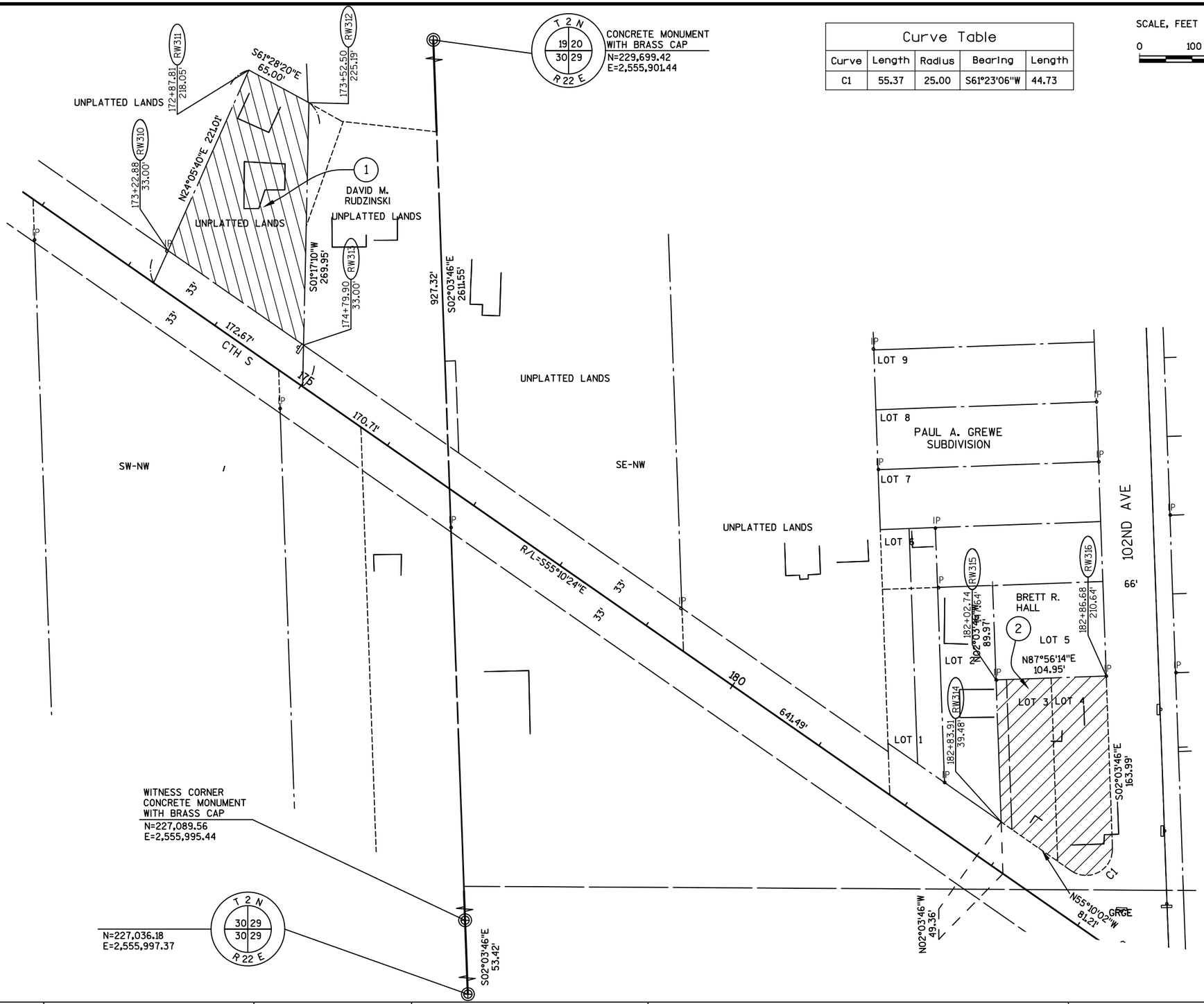

Curve Table				
Curve	Length	Radius	Bearing	Length
C1	55.37	25.00	S61°23'06"W	44.73

HWY	BASIS OF EXISTING R/W	R/W WIDTH	YEAR
CTH S	R/W PLAT PROJECT 2989	VARIES	1931

REVISION DATE: 08/06/2019 N.C.	DATE: 03/01/2018	SCALE, FEET 0 100 200	HWY: CTH S	PROJECT NUMBER: RD16-003	PLAT SHEET: 4.4
	GRID FACTOR: N/A		COUNTY: KENOSHA	CONSTRUCTION PROJECT NUMBER:	PS&E SHEET: 234 E

FILE NAME:S/5166978/DWG/32000100/PLAT/SP100.DWG

CTH S 3210-00-05 4.4

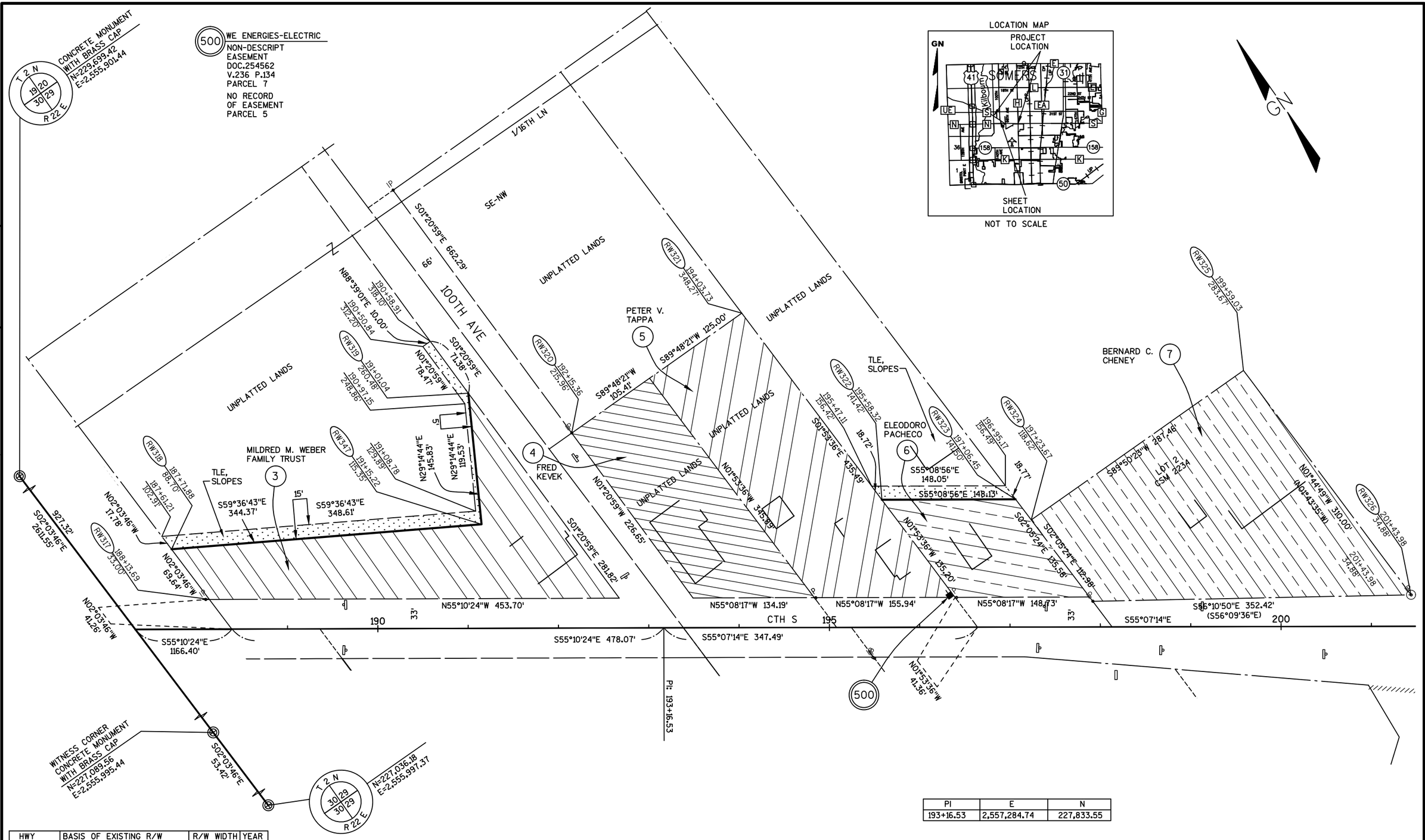

PI	E	N
193+16.53	2,557,284.74	227,833.55

HWY	BASIS OF EXISTING R/W	R/W WIDTH	YEAR
CTH S	R/W PLAT PROJECT 2989	VARIES	1931

REVISION DATE: 08/06/2019 N.C.	DATE: 03/01/2018	SCALE, FEET 0 100 200	HWY: CTH S	PROJECT NUMBER: RD16-003	PLAT SHEET: 4.5
	GRID FACTOR: N/A		COUNTY: KENOSHA	CONSTRUCTION PROJECT NUMBER:	PS&E SHEET: 235 E

FILE NAME:S/5166978/DWG/32000100/PLAT/SP100.DWG

CTH S 3210-00-05 4.5

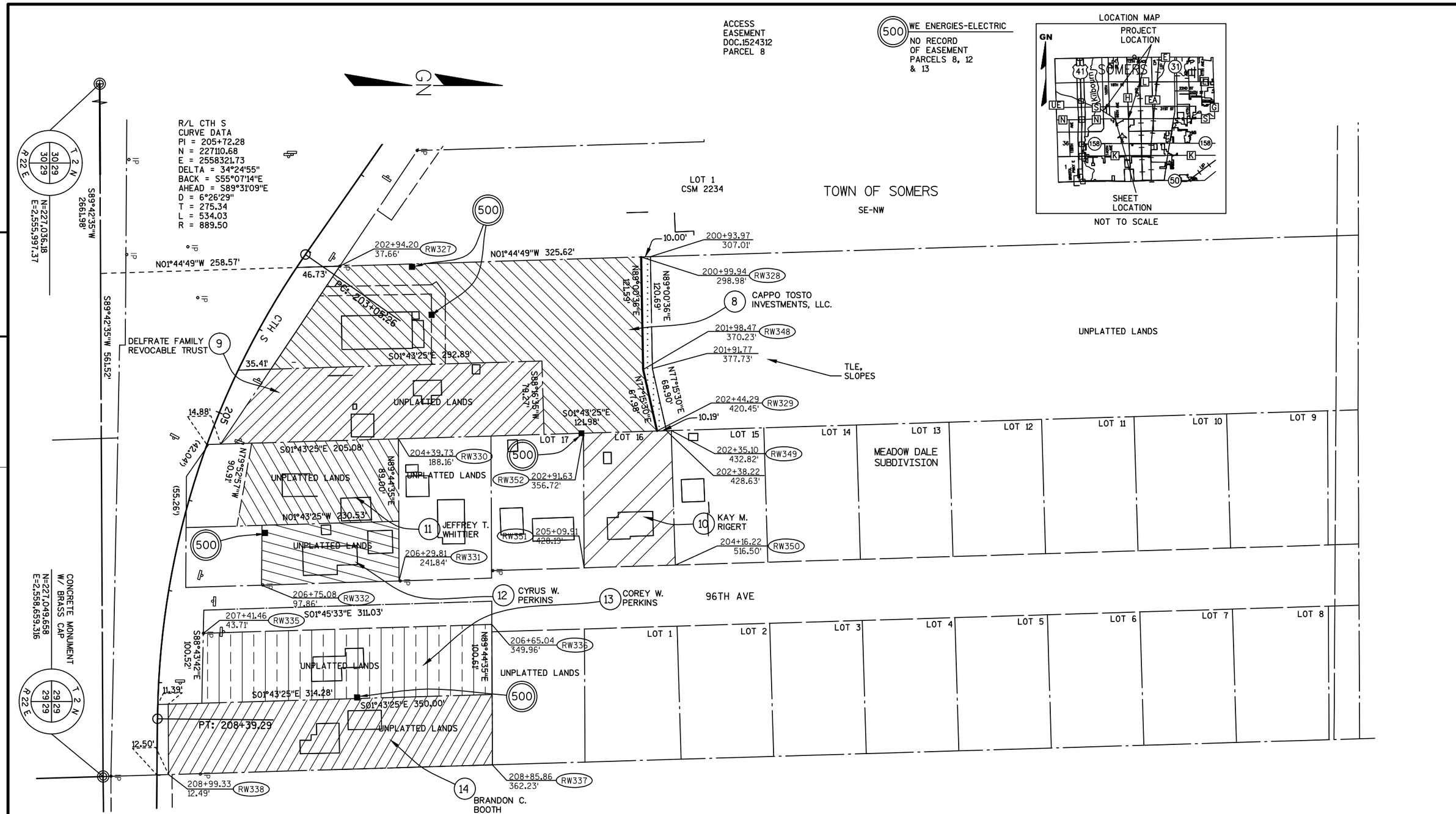

HWY	BASIS OF EXISTING R/W	R/W WIDTH	YEAR
CTH S	R/W PLAT PROJECT 2989	VARIES	1931

REVISION DATE: 03/20/2018 08/06/2019 N.C. 06/20/2018 06/25/2018	DATE: 03/01/2018	SCALE, FEET 0 50 100	HWY: CTH S	PROJECT NUMBER: RD16-003	PLAT SHEET: 4.6
	GRID FACTOR: N/A		COUNTY: KENOSHA	CONSTRUCTION PROJECT NUMBER: RD16-003	PS&E SHEET: 236 E

FILE NAME:S/5166978/DWG/32000100/PLAT/SP100.DWG

CTH S 3200-01-21 4.6

LOCATION MAP

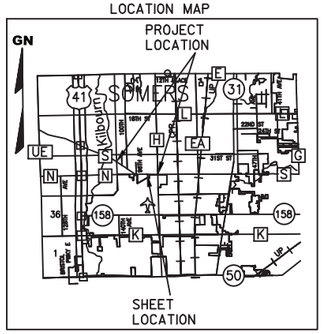

NOT TO SCALE

TOWN OF SOMERS

SW-NE

4

GN

4

UNPLATTED LANDS

UNPLATTED LANDS

UNPLATTED LANDS

UNPLATTED LANDS

RONALD F. RINALDI 15

RONALD F. RINALDI 16

TLE, SLOPES

TLE, SLOPES

217+87.03 187.49'

219+37.03 190.76'

219+38.86 143.29'

222+28.50 190.66'

RW342 217+88.73 143.34'

RW344

RW345 222+30.20 143.19'

RW346 222+34.18 32.74'

RW341 217+93.20 27.30'

N89°14'00"E 150.03'

S89°30'00"E 291.47'

44.19'

47.50'

47.50'

S89°30'00"E 150.12'

S89°30'00"E 291.35'

S01°43'25"E 116.13'

N01°43'25"W 114.21'

S01°34'47"E 110.52'

UNPLATTED LANDS

N89°46'33"E 150.06'

S89°46'33"W 290.95'

215

220 CTH S

225

S89°13'54"W 1334.66'

SEC LN=N89°13'54"E 2669.35'

N01°35'20"W 61.88'

T 2 N
29 29
29 29
R 22 E

CONCRETE MONUMENT W/ BRASS CAP
N=227,049.658
E=2,558,659.316

T 2 N
29 28
29 28
R 22 E

CONCRETE MONUMENT W/ BRASS CAP
N=227,085.447
E=2,561,328.422

HWY	BASIS OF EXISTING R/W	R/W WIDTH	YEAR
CTH S	R/W PLAT PROJECT 2989	VARIES	1931

REVISION DATE: 08/06/2019 (6)	DATE: 03/01/2018	SCALE, FEET 0 100 200	HWY: CTH S	PROJECT NUMBER: RD16-003	PLAT SHEET: 4.7
	GRID FACTOR: N/A		COUNTY: KENOSHA	CONSTRUCTION PROJECT NUMBER: RD16-003	PS&E SHEET: 237 E

FILE NAME:S/5166978/DWG/32000100/PLAT/SP100.DWG

PROJECT NUMBER	SHEET NUMBER	TOTAL SHEETS
RD16-003(A)	4.1	

PLAT OF RIGHT OF WAY REQUIRED FOR

CTH S

120TH AVE TO CTH H

CTH S KENOSHA CO.

CONSTRUCTION NO.

4

CONVENTIONAL ABBREVIATIONS

ACCESS POINT/ DRIVEWAY CONNECTION	AP	RELEASE OF RIGHTS	ROR
ACCESS RIGHTS	AR	REMAINING	REM.
ACRES	AC.	RIGHT-OF-WAY	R/W
AND OTHERS	ET.AL.	SECTION	SEC.
CENTERLINE	C/L	SOUTHEAST	SE
CERTIFIED SURVEY MAP	CSM	SOUTHWEST	SW
CORNER	COR.	STATION	STA.
DOCUMENT	DOC.	TEMPORARY LIMITED EASEMENT	TLE
EASEMENT	EASE.	VOLUME	V.
HIGHWAY EASEMENT	H.E.	**CURVE DATA**	
LAND CONTRACT	LC	LONG CHORD	LCH
LIFE ESTATE	LE	LONG CHORD BEARING	LCB
MONUMENT	MON.	RADIUS	R
NORTHEAST	NE	DEGREE OF CURVE	D
NORTHWEST	NW	CENTRAL ANGLE OR DELTA	DELTA
PAGE	P.	LENGTH OF CURVE	L
PERMANENT LIMITED EASEMENT	PLE	TANGENT	TAN
PROPERTY LINE	PL	POINT OF CURVATURE	PC
RECORDED AS	(100')	POINT OF INTERSECTION	PI
REFERENCE LINE	R/L	POINT OF TANGENCY	PT

CONVENTIONAL SYMBOLS

FOUND IRON PIPE/PIN	⌀ (1" UNLESS NOTED)	PROPOSED R/W LINE	
		EXISTING H.E. LINE	
R/W MONUMENT	● (SET)	PROPERTY LINE	
R/W STANDARD	▲ (SET)	LOT & TIE LINES	
SIGN	SIGN	SLOPE INTERCEPTS	
SECTION CORNER MONUMENT		CORPORATE LIMITS	
SECTION CORNER SYMBOL		ACCESS RESTRICTED (BY PREVIOUS ACQUISITION/CONTROL)	
FEE (HATCH VARIES)		NO ACCESS (BY ACQUISTION)	
TEMPORARY LIMITED EASEMENT		NO ACCESS (BY STATUTORY AUTHORITY)	
PERMANENT LIMITED EASEMENT		SECTION LINE	
HIGHWAY EASEMENT		QUARTER LINE	
R/W BOUNDARY POINT	RWB2	SIXTEENTH LINE	
PARCEL NUMBER	102	EXISTING CENTERLINE	
UTILITY NUMBER	92	PROPOSED REFERENCE LINE	
SIGN NUMBER (OFF PREMISE)	21-1	PARALLEL OFFSET	
BUILDING			
TLE POINT NUMBER	TXXX		

CONVENTIONAL UTILITY SYMBOLS

		NON COMPENSABLE	COMPENSABLE
WATER	W		
GAS	G		
TELEPHONE	T		
OVERHEAD	OH		
TRANSMISSION LINES			
ELECTRIC	E		
CABLE TELEVISION	TV		
FIBER OPTIC	FO		
SANITARY SEWER	SAN		
STORM SEWER	SS		
POWER POLE		⌂	⌂
TELEPHONE POLE		⌀	⌀
TELEPHONE PEDESTAL		⌑	⌑
GUY ANCHOR		⊙	●
ELECTRIC TOWER		⊠	
GAS VALVE		⌀ GV	

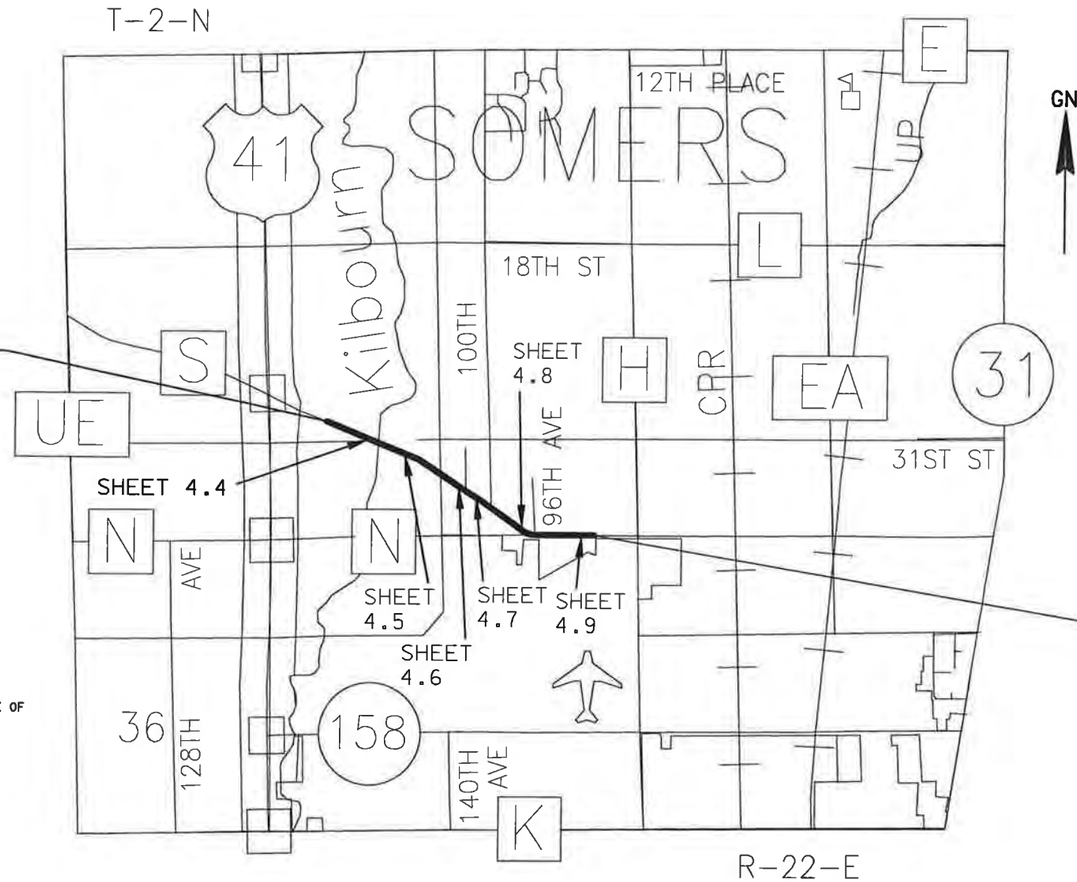

LAYOUT

NO SCALE

TOTAL NET LENGTH OF CENTERLINE = 1.65 MI.

NOTES:

COORDINATES AND BEARINGS ON THIS PLAT ARE REFERENCED TO THE WISCONSIN STATE PLANE COORDINATE SYSTEM (WSPCS), SOUTH ZONE, (NAD-27). ALL PLAT COORDINATES AND DISTANCES ARE GROUND AND MAY BE CONVERTED TO GRID BY APPLYING THE COMBINED CONVERSION FACTOR OF (0.99999605) AS PUBLISHED ON SEWRPC CONTROL SURVEY SUMMARY DIAGRAM WITH A REVISED DATE OF JANUARY 2015.

RIGHT-OF-WAY MONUMENTS ARE TYPE 2 AND WILL BE PLACED PRIOR TO THE COMPLETION OF THE PROJECT.

FOR THE LATEST ACCESS/DRIVEWAY INFORMATION CONTACT KENOSHA COUNTY.

RIGHT-OF-WAY BOUNDARIES ARE DEFINED WITH COURSES OF THE PERIMETER OF THE HIGHWAY LANDS REFERENCED TO THE U.S. PUBLIC LAND SURVEY SYSTEM OR OTHER "SURVEYS OF PUBLIC RECORD".

PROPERTY LINES SHOWN ON THIS PLAT ARE DRAWN FROM DATA DERIVED FROM MAPS AND DOCUMENTS OF PUBLIC RECORD AND/OR EXISTING OCCUPATIONAL LINES. THIS PLAT MAY NOT BE A TRUE REPRESENTATION OF EXISTING PROPERTY LINES, EXCLUDING RIGHT-OF-WAY LINES, AND SHOULD NOT BE USED AS A SUBSTITUTE FOR AN ACCURATE FIELD SURVEY.

EXISTING HIGHWAY RIGHT-OF-WAY SHOWN HEREIN IS BASED ON THE FOLLOWING POINTS OF REFERENCE: EXISTING HIGHWAY RIGHT-OF-WAY FOR CTH S ESTABLISHED FROM PREVIOUS PROJECTS 3210-00-21, 3831-08-70 AND EXISTING CERTIFIED SURVEY MAPS AND RECORDED SUBDIVISIONS.

A **TEMPORARY LIMITED EASEMENT** (TLE) IS A RIGHT FOR CONSTRUCTION PURPOSES, AS DEFINED HEREIN, INCLUDING THE RIGHT TO OPERATE NECESSARY EQUIPMENT THEREON AND THE RIGHT OF INGRESS AND EGRESS, AS LONG AS REQUIRED FOR SUCH PUBLIC PURPOSE, INCLUDING THE RIGHT TO PRESERVE, PROTECT, REMOVE, OR PLANT THEREON ANY VEGETATION THAT THE HIGHWAY AUTHORITIES MAY DEEM NECESSARY OR DESIRABLE. ALL TLE'S ARE TO EXPIRE AT THE COMPLETION OF THE CONSTRUCTION PROJECT FOR WHICH THIS INSTRUMENT IS GIVEN

DIMENSIONING FOR THE NEW RIGHT-OF-WAY IS MEASURED ALONG AND PERPENDICULAR TO NEW REFERENCE LINES.

ORIGINAL PLAT PREPARED BY

raSmith
CREATIVITY BEYOND ENGINEERING
10745 W Bluemound Road Brookfield WI 53005
262 781-1000 fax 262 781-8466
www.rasmithnational.com

WISCONSIN
NATHAN A. VAUGHN
S-2986
DOUSMAN
WI
LAND SURVEYOR

DATE: 8/3/2018 Nathan A Vaughn
LAND SURVEYOR

REVISION DATE
8-14-18
10-5-18
10-22-18
3-8-19
6-3-19

KENOSHA COUNTY

APPROVED BY COUNTY

DATE: 6/10/2019 Clemont A Bogner (Signature)

E

FILE NAME:S/5166978/DWG/PLAT/TPP100.DWG
APPRAISAL PLAT DATE:

RD16-003(A) - 4.00

SCHEDULE OF LANDS & INTERESTS REQUIRED

AREAS SHOWN IN THE TOTAL ACRES COLUMN MAY BE APPROXIMATE AND ARE DERIVED FROM TAX ROLLS OR OTHER AVAILABLE SOURCES AND MAY NOT INCLUDE LANDS OF THE OWNER WHICH ARE NOT CONTIGUOUS TO THE AREA TO BE ACQUIRED.

OWNERS NAMES ARE SHOWN FOR REFERENCE PURPOSES ONLY, AND ARE SUBJECT TO CHANGE PRIOR TO TRANSFER OF LAND AND INTERESTS TO KENOSHA COUNTY.

PARCEL NUMBER	SHEET NUMBER	OWNER(S)	INTEREST REQUIRED	TOTAL ACRES	R/W REQUIRED ACRES			TOTAL REMAINING ACRES	T.L.E. TEMP. ACRES	P.L.E. PERM. ACRES	PARCEL NUMBER
					NEW	EXISTING	TOTAL				
1	4.4	KWIK TRIP INC.	FEE, TLE	39.36	0.129	-	0.129	39.23	0.079	-	1
2	4.4	DONNA M. JAWORSKI	FEE, TLE	0.73	0.092	-	0.092	0.64	0.035	-	2
3	4.4	BRYAN P. MENAREK	FEE, TLE	0.36	0.055	-	0.055	0.30	0.024	-	3
4	4.4	DARBY LANE FARMS	FEE, TLE	75.08	2.231	0.268	2.499	72.58	0.359	-	4
5	4.4	KTR WIS IV, LLC.	TLE	48.62	-	-	-	48.62	0.422	-	5
6	4.4	GARY A. MARTINSON	FEE, TLE	11.38	0.217	0.235	0.452	10.93	0.071	-	6
7	4.4	FRANK W. WALDO	FEE, PLE, TLE	7.29	0.012	0.159	0.171	7.12	0.085	0.056	7
8	4.5	CAROL F. GROHS	FEE, TLE	2.01	0.273	0.153	0.426	1.58	0.185	-	8
9	4.5	DEBORAH K. KAHANA	FEE, TLE	6.37	1.016	0.424	1.440	4.93	0.206	-	9
10	4.5	MICHAEL C. SARAUER	FEE, TLE	1.07	0.214	0.128	0.342	0.73	0.108	-	10
11	4.5, 4.6	CAROL F. GROHS	FEE, TLE	83.88	0.607	0.221	0.828	83.05	0.126	-	11
12	4.5	FRANC BEESON	FEE, TLE	0.54	0.006	0.057	0.063	0.48	0.043	-	12
13	4.5	ROBERT C. AXELSON	FEE, TLE	2.10	0.007	0.059	0.066	2.03	0.045	-	13
14	4.5	CHARLES BYERS	FEE, TLE	8.06	0.149	0.365	0.514	7.55	0.191	-	14
15	4.5	PAUL S. CZAR	TLE	3.36	-	-	-	3.36	0.020	-	15
16	4.5	JOSEPH M. BRNAK	FEE, TLE	5.11	0.034	0.147	0.181	4.93	0.070	-	16
17	4.5	JOSEPH NEU	FEE, TLE	4.84	0.098	0.180	0.278	4.56	0.075	-	17
18	4.6	JEAN K. ZIERZ	FEE, TLE	1.99	0.286	0.128	0.414	1.58	0.063	-	18
19	4.6	VICTOR KOSMAN	FEE, TLE	5.00	0.420	0.205	0.625	4.375	0.130	-	19
20	4.6	RANDY S. ELLERMAN	FEE, TLE	5.20	0.352	0.181	0.533	4.67	0.107	-	20
21	4.6	THERESA MCCURDY	FEE, TLE	0.38	0.096	-	0.096	0.28	0.046	-	21
22	4.6	RUSS W. SWANSON	TLE	0.22	-	-	-	0.22	0.004	-	22
23	4.6	CLARENCE K. REED	FEE, TLE	4.70	0.218	0.216	0.434	4.27	0.119	-	23
24	4.6	JAMES NUORALA	FEE, TLE	2.96	0.183	0.150	0.333	2.63	0.129	-	24
25	4.6, 4.7	BERNARD W. GROSS	FEE, TLE	14.06	1.779	0.957	2.736	11.32	0.390	-	25
26	4.7	ELIMINATED	-	-	-	-	-	-	-	-	26
27	4.7	EILEEN A. PAGER WILLIAMS	FEE, TLE	0.88	0.049	-	0.049	0.83	0.081	-	27
28	4.7	ALAN J. HUBELER	FEE, TLE	1.39	0.218	0.185	0.403	0.99	0.106	-	28
29	4.7	JAMES R. GARCIA	FEE, TLE	5.82	0.073	0.305	0.378	5.44	0.161	-	29
30	4.8	HAROLD D. THURBER	FEE, TLE	7.66	0.521	-	0.521	7.14	0.095	-	30
31	4.8	LEONARD CISKOWSKI	TLE	0.33	-	-	-	0.33	0.003	-	31
32	4.8	9909 BURLINGTON ROAD PROPERTIES, LLC.	TLE	5.40	-	-	-	5.40	0.269	-	32
33	4.9	CLIFTON E. PETERSON	FEE, TLE	74.33	2.557	0.448	3.005	71.32	0.207	-	33
34	4.9	LIVING LIGHT CHRISTIAN CHURCH	FEE, TLE	55.89	1.393	0.412	1.805	54.08	0.127	-	34
35	4.9	CITY OF KENOSHA	TLE	128.30	-	-	-	128.30	0.279	-	35
36	4.9	DUSTIN HARPE	TLE	2.78	-	-	-	2.78	0.124	-	36
UTILITY NUMBER											
500	4.4,4.6,4.7,4.8 & 4.9	WE ENERGIES–ELEC	RELEASE OF RIGHTS								
501	4.4	VILLAGE OF SOMERS	RELEASE OF RIGHTS								
502	4.4	CITY OF KENOSHA	RELEASE OF RIGHTS								
503	4.8	AT&T WISCONSIN	RELEASE OF RIGHTS								

REVISION DATE: 8/14/2018, 10/5/2018, 10/22/2018, 3/8/2019, 6/3/2019

DATE: 08/03/2018

GRID FACTOR: N/A

SCALE, FEET 0 N/A N/A

HWY: CTH S

COUNTY: KENOSHA

PROJECT NUMBER: RD16-003(A)

CONSTRUCTION PROJECT NUMBER:

PLAT SHEET: 4.2

PS&E SHEET: 239

E

FILE NAME:S/5166978/DWG/PLAT/TPP100.DWG

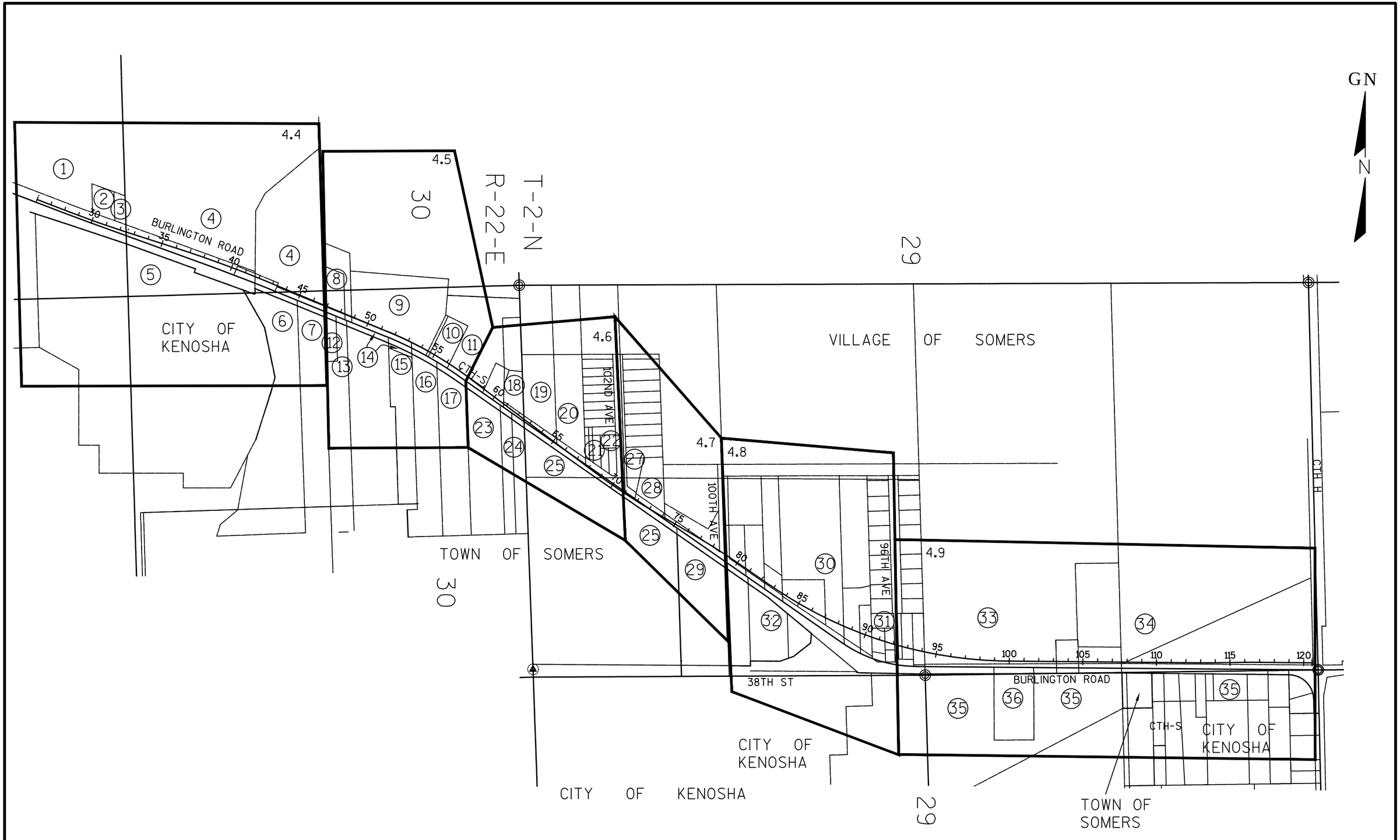

REVISION DATE: 8/14/2018 10/22/2018 3/8/2019	DATE: 08/03/2018	SCALE, FEET NOT TO SCALE	HWY: CTH S	PROJECT NUMBER: RD16-003(A)	PLAT SHEET: 4.3	
	GRID FACTOR: N/A		COUNTY: KENOSHA	CONSTRUCTION PROJECT NUMBER:	PS&E SHEET: 240	E

FILE NAME:S/5166978/DWG/PLAT/TPP100.DWG

HWY	BASIS OF EXISTING R/W	R/W WIDTH	YEAR
CTH S	PROJECT 3210-00-21	VARIES	1988
CTH S	CSM 2738	VARIES	2013

R/W COURSE TABLE		
LINE	BEARING	DISTANCE
500-501	N20°57'48"E	19.93
501-502	S69°02'12"E	130.49
502-569	S71°55'51"E	118.41
569-503	S70°34'49"E	148.44
503-504	S74°14'33"E	108.94
504-505	N17°57'05"E	15.00
RW1-509	N67°26'27"W	198.75
509-510	S02°04'22"E	24.65
510-511	N70°05'08"W	307.97
RW1-PLE1	S01°55'00"E	9.76
PLE1-697	N69°06'19"W	196.19
697-510	S02°04'22"E	8.61

SHEET LOCATION

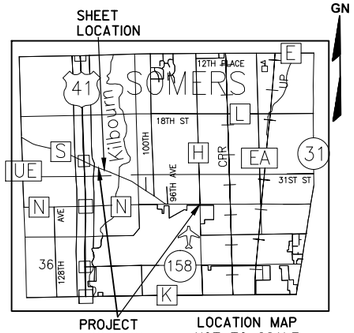

PROJECT LOCATION

LOCATION MAP NOT TO SCALE

GN

SCALE, FEET
0 100 200

R/L CTH S
CURVE DATA
PI = 30+35.29
N = 230,125.84
E = 2,553,033.23
DELTA = 03°00'42"
BACK = N69°02'12"W
AHEAD = S72°02'55"E
D = 01°00'00"
T = 189.80'
L = 379.52'
R = 7,220.00'

R/L CTH S
CURVE DATA
PI = 39+43.16
N = 229,845.99
E = 2,553,896.98
DELTA = 04°36'28"
BACK = N72°02'55"W
AHEAD = S67°26'27"E
D = 01°00'00"
T = 306.96'
L = 613.60'
R = 7,630.00'

(500) WE ENERGIES - ELEC
12' EASEMENT
DOC.1754597
PARCEL 5
NON-DESCRIPT EASEMENT
DOC.304941
V.317, P.207
PARCEL 5
NON-DESCRIPT EASEMENT
DOC.227228
V.198, P.310
PARCEL 5
NON-DESCRIPT EASEMENT
DOC.293536
V.298, P.400
PARCEL 5
NON-DESCRIPT EASEMENT
DOC.293537
V.298, P.401
PARCEL 5
10' EASEMENT
DOC.300681
V.310, P.545
PARCEL 6

(501) VILLAGE OF SOMERS
NO RECORD OF EASEMENT
PARCEL 2

(502) CITY OF KENOSHA
NO RECORD OF EASEMENT
PARCEL 5

1 AP PER PROJECT 1030-22-20 - 4.12

COMPUTED FROM TIES
N=232272.51
E=2553164.51

CONCRETE MONUMENT WITH BRASS CAP
N=229566.60
E=2551083.71

CONCRETE MONUMENT WITH BRASS CAP
N=229699.42
E=2555901.44

COMPUTED
N=229622.71
E=2553244.96

PI	NORTHING	EASTING
26+00.00	230281.57	2552626.74

VILLAGE OF SOMERS
CITY OF KENOSHA
TOWN OF SOMERS

UNPLATTED LAND
SE-SW
SW-SE
NW-NE

KILBOURN ROAD DITCH
BURLINGTON ROAD
CTH S
PL 1/16TH LINE

TLE, SLOPES
TLE, SLOPES & DRIVEWAY
KWIK TRIP INC.
BRYAN P. MENAREK
DONNA M. JAWORSKI
DARBY LANE FARMS
KTR WIS IV, LLC.
LOT 2 CSM 2738
GARY A. MARTINSON
FRANK W. WALDO

ACCESS EASEMENT
DOC.1715052
PARCEL 5

REVISION DATE: 8/14/2018 10/22/2018	DATE: 08/03/2018	SCALE, FEET 0 100 200	HWY: CTH S	PROJECT NUMBER: RD16-003(A)	PLAT SHEET: 4.4	
	GRID FACTOR: N/A		COUNTY: KENOSHA	CONSTRUCTION PROJECT NUMBER:	PS&E SHEET: 241	E

FILE NAME:S/5166978/DWG/PLAT/TPP100.DWG

4

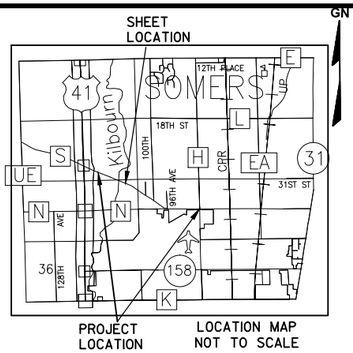

R/W COURSE TABLE		
LINE	BEARING	DISTANCE
522-570	S61°51'23"E	51.08
570-566	S57°29'58"E	39.17
590-591	S02°03'46"E	16.86
591-592	N68°13'21"W	170.61
592-593	N01°46'09"W	28.80
527-698	N67°26'27"W	426.39
698-699	S02°03'46"E	9.41
699-PLE1	N69°06'19"W	11.29
PLE1-RW1	N01°55'00"W	9.76

R/W CURVE TABLE				
CURVE	LENGTH	RADIUS	BEARING	CHORD
521-522	383.40'	2617.00'	S63°14'38"E	383.06'
525-590	305.74'	2489.00'	N59°05'43"W	305.55'
593-527	33.98'	2489.00'	N67°02'59"W	33.98'

T 2 N
19 20
30 29
R 22 E

CONCRETE MONUMENT WITH BRASS CAP
N=229699.42
E=2555901.44

T 2 N
19 19
30 30
R 22 E

COMPUTED
N=229622.71
E=2553244.96

SE-SE
S88°20'46"W
1328.94'
Z N88°20'46"E 2657.59'
NE-NE

UNPLATTED LAND
CAROL F. GROHS
8
TLE, SLOPES & DRIVEWAY
DEBORAH K. KAHANA
9
HOUSE EXEMPT FROM TLE
TLE, SLOPES & DRIVEWAY
UNPLATTED LAND
VILLAGE OF SOMERS
UNPLATTED LAND
LOT 1 CSM 278
TLE, SLOPES & DRIVEWAY
MICHAEL C. SARAUER
10
TLE, SLOPES
CAROL F. GROHS
11

PL
RW517 46+42.24 79.44'
RW518 46+60 90.00'
46+53.69 54.00'
47+10 90.00'
RW565 48+56.87 54.00'
48+24.85 100.00'
RW519 48+40.56 90.24'
RW520 51+49.27 54.00' 72.01' 95.00'
RW521
50+30 103.16' 115.00'
51+15 94.47' 115.00'
RW522 55+24.76 54.00'
RW570 55+74.67 57.00'
55+90 83.28' 116.46'
RW523 56+08.53 95.81'
RW566 56+12.99 57.00'
56+55 113.99' 123.71'
PT: 57+94.94
39'
10'
S68°19'27"E 308.75'
S22°33'33"W 41.00'
N01°39'52"W 39.74'
N01°39'52"W 59.21'
N01°39'52"W 41.74'
N01°55'00"W 39.48'
S67°26'27"E 203.18'
WELL
54+24.61 74.99'
59'
55'
N26°07'27"E 39.08'
S54°17'25"E 193.26'
S36°59'35"W 93.10'
S64°34'27"W 34.87'
S02°03'46"E 16.10'
N53°00'25"W 142.77'
38'
12'
50
RL= S67°26'27"E 471.29'
CTH S
BURLINGTON ROAD
33'
55'
GUY
RW1
PLE1
7
PLE698 47+22.88 74.00'
PLE69 47+26.80 82.55'
47+35 99.30' 104.30'
12
FRANC BEESON
TLE, SLOPES & DRIVEWAY
51'
13
ROBERT C. AXELSON
TLE, SLOPES & DRIVEWAY
58'
49+00 99.01'
49+80 119.14'
50+15 100.00' 118.90'
14
CHARLES BYERS
TLE, SLOPES & DRIVEWAY
N67°26'27"W 437.80'
PC: 51+49.27
51+49.27 88.25'
RW527 51+49.27 74.00'
14
RW592 51+96.98 100.05'
RW593 51+84.26 74.00'
S01°45'51"E 400.00'
53+20 93.38' 107.02'
15
PAUL S. CZAR
TLE, SLOPES & DRIVEWAY
RW591 53+73.75 88.67'
54+00 85.01' 105.02'
RW590 53+65.17 74.00'
16
JOSEPH M. BRNAK
TLE, SLOPES
24'
20'
56+65 85.76'
SEPC
N34°25'25"E 13.51'
RW525 56+80 74.00' 87.51' 99.52'
RW524
17
JOSEPH NEU
TLE, SLOPES
12'
1/16TH LINE
UNPLATTED LAND
TOWN OF SOMERS
LOT 1 CSM 517
UNPLATTED LAND
UNPLATTED LAND
NE-NE

SCALE, FEET
0 50 100

GN

R/L CTH S
CURVE DATA
PI = 54+73.82
N = 229,258.65
E = 2,555,310.82
DELTA = 14°26'02"
BACK = N67°26'27"W
AHEAD = S53°00'25"E
D = 02°00'00"
T = 324.55'
L = 645.66'
R = 2,563.00'

50' DRIVEWAY EASEMENT DOC.330699 V.353, P.476 PARCEL 13

50' DRIVEWAY EASEMENT DOC.330955 V.354, P.58 PARCEL 13

HWY	BASIS OF EXISTING R/W	R/W WIDTH	YEAR
CTH S	CSM 278	66'	1975

PI	NORTHING	EASTING
26+00.00	230281.57	2552626.74

REVISION DATE: 8/14/2018 3/8/2019 10/5/2018 6/3/2019 10/22/2018	DATE: 08/03/2018 GRID FACTOR: N/A	SCALE, FEET 0 50 100	HWY: CTH S COUNTY: KENOSHA	PROJECT NUMBER: RD16-003(A) CONSTRUCTION PROJECT NUMBER:	PLAT SHEET: 4.5 PS&E SHEET: 242	E

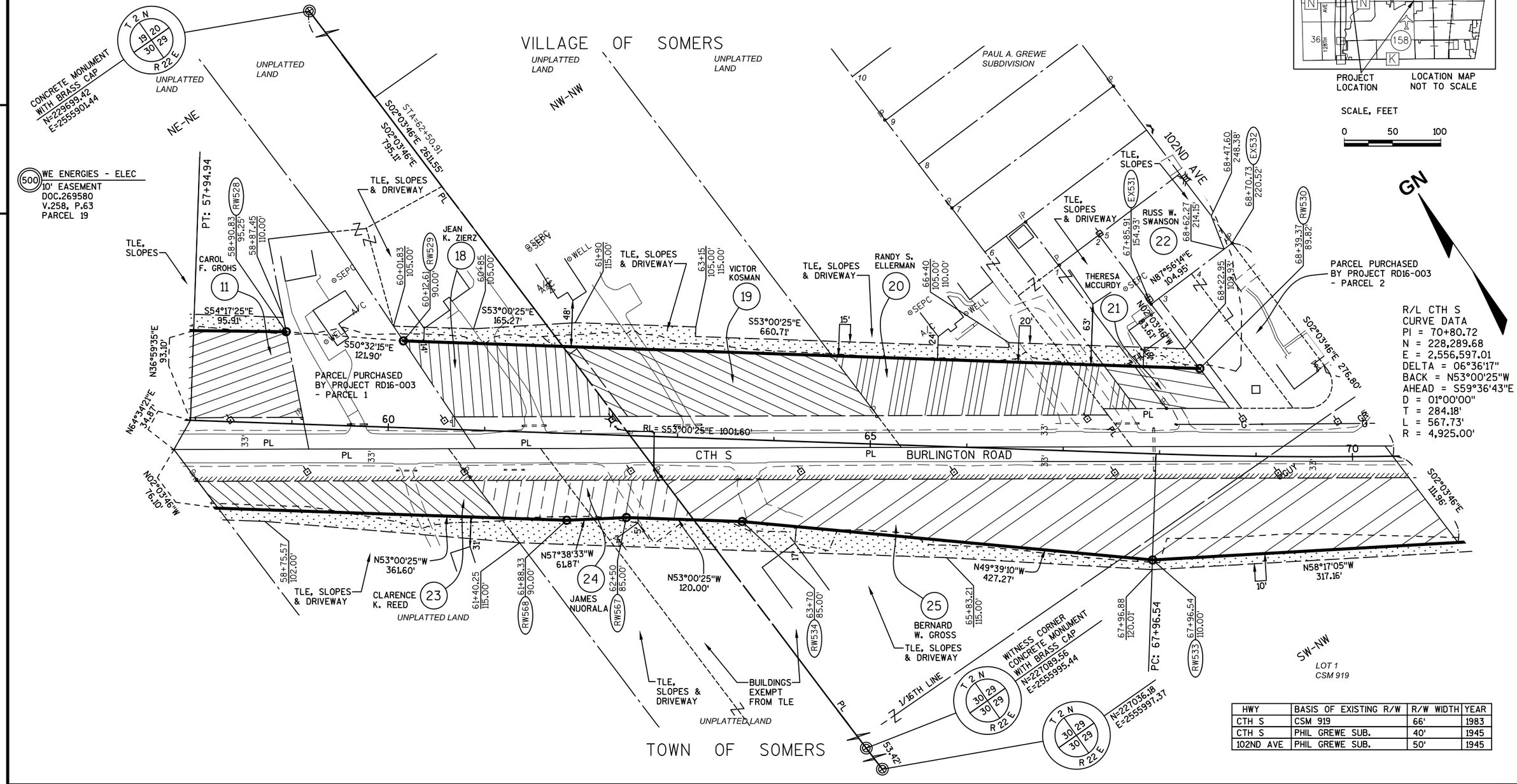

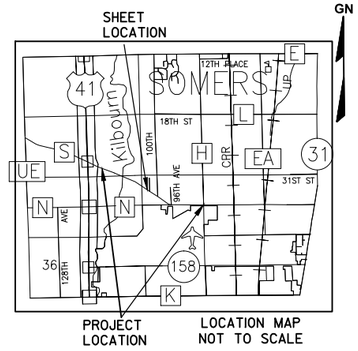

HWY	BASIS OF EXISTING R/W	R/W WIDTH	YEAR
CTH S	CSM 919	66'	1983
CTH S	PHIL GREWE SUB.	40'	1945
102ND AVE	PHIL GREWE SUB.	50'	1945

REVISION DATE: 8/14/2018 10/22/2018	DATE: 08/03/2018	SCALE, FEET 0 50 100	HWY: CTH S	PROJECT NUMBER: RD16-003(A)	PLAT SHEET: 4.6	
	GRID FACTOR: N/A		COUNTY: KENOSHA	CONSTRUCTION PROJECT NUMBER:	PS&E SHEET: 243	E

HWY	BASIS OF EXISTING R/W	R/W WIDTH	YEAR
CTH S	SOMERVALE SUB.	40'	1954
102ND AVE	SOMERVALE SUB.	66'	1954
CTH S	CSM 919	66'	1983

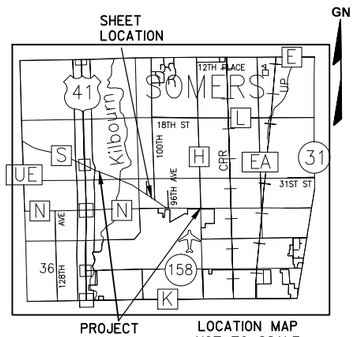

VILLAGE OF SOMERS

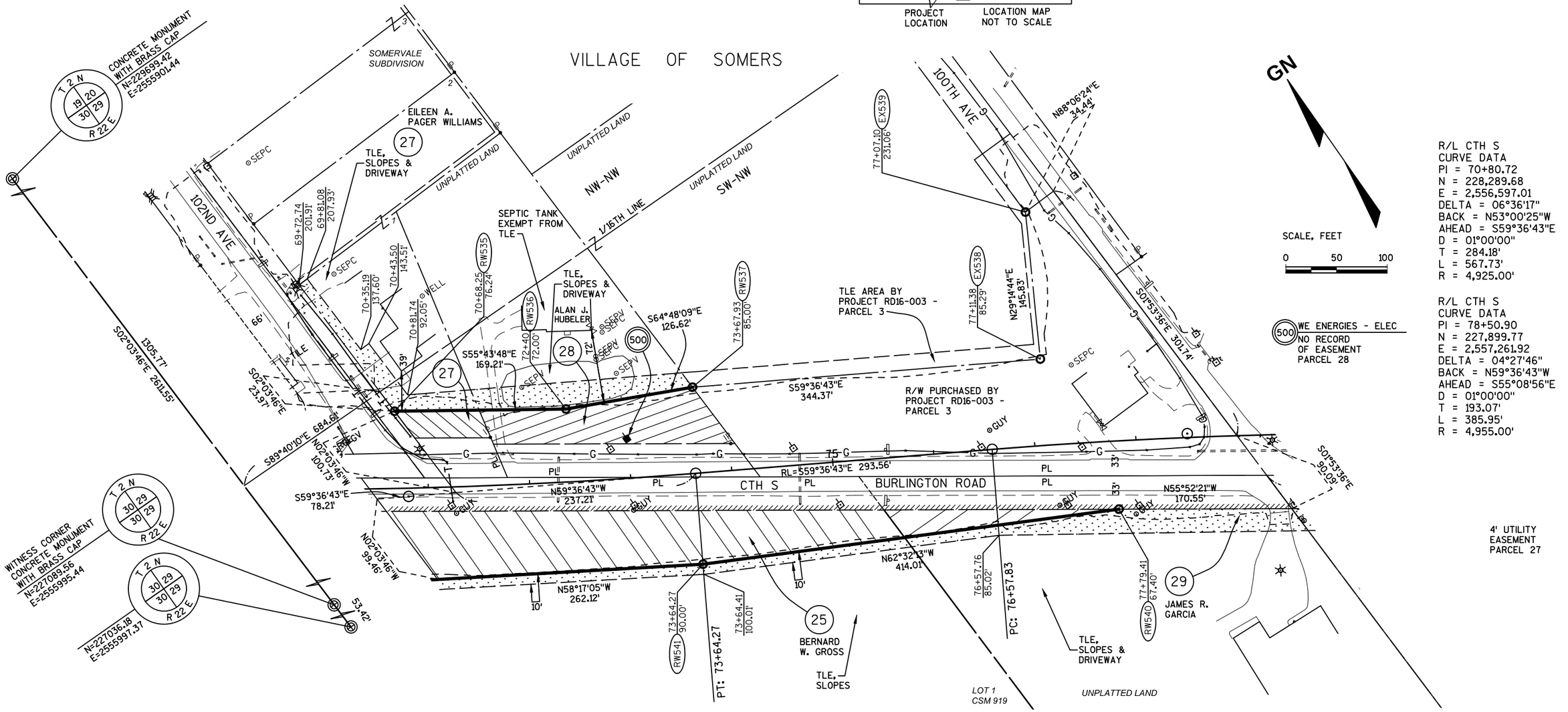

TOWN OF SOMERS

REVISION DATE: 8/14/2018 10/22/2018	DATE: 08/03/2018	SCALE, FEET 0 50 100	HWY: CTH S	PROJECT NUMBER: RD16-003(A)	PLAT SHEET: 4.7	
	GRID FACTOR: N/A		COUNTY: KENOSHA	CONSTRUCTION PROJECT NUMBER:	PS&E SHEET: 244	E

FILE NAME:S/5166978/DWG/PLAT/TPP200.DWG

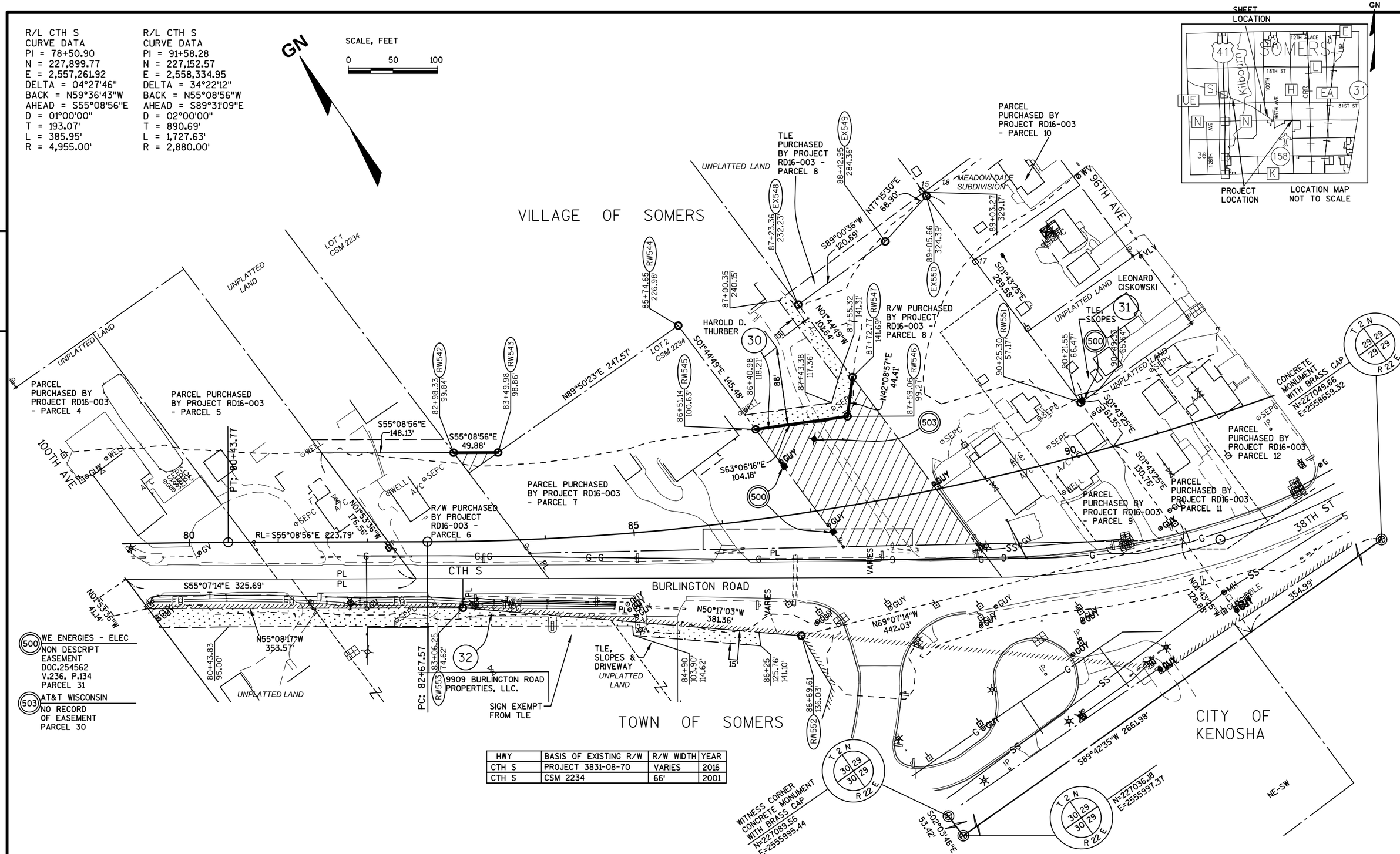

HWY	BASIS OF EXISTING R/W	R/W WIDTH	YEAR
CTH S	PROJECT 3831-08-70	VARIES	2016
CTH S	CSM 2234	66'	2001

REVISION DATE: 8/14/2018 10/22/2018	DATE: 08/03/2018	SCALE, FEET 0 50 100	HWY: CTH S	PROJECT NUMBER: RD16-003(A)	PLAT SHEET: 4.8
	GRID FACTOR: N/A		COUNTY: KENOSHA	CONSTRUCTION PROJECT NUMBER:	PS&E SHEET: 245 E

FILE NAME:S/5166978/DWG/PLAT/TPP200.DWG

CTH S RD16-003(A) 4.8

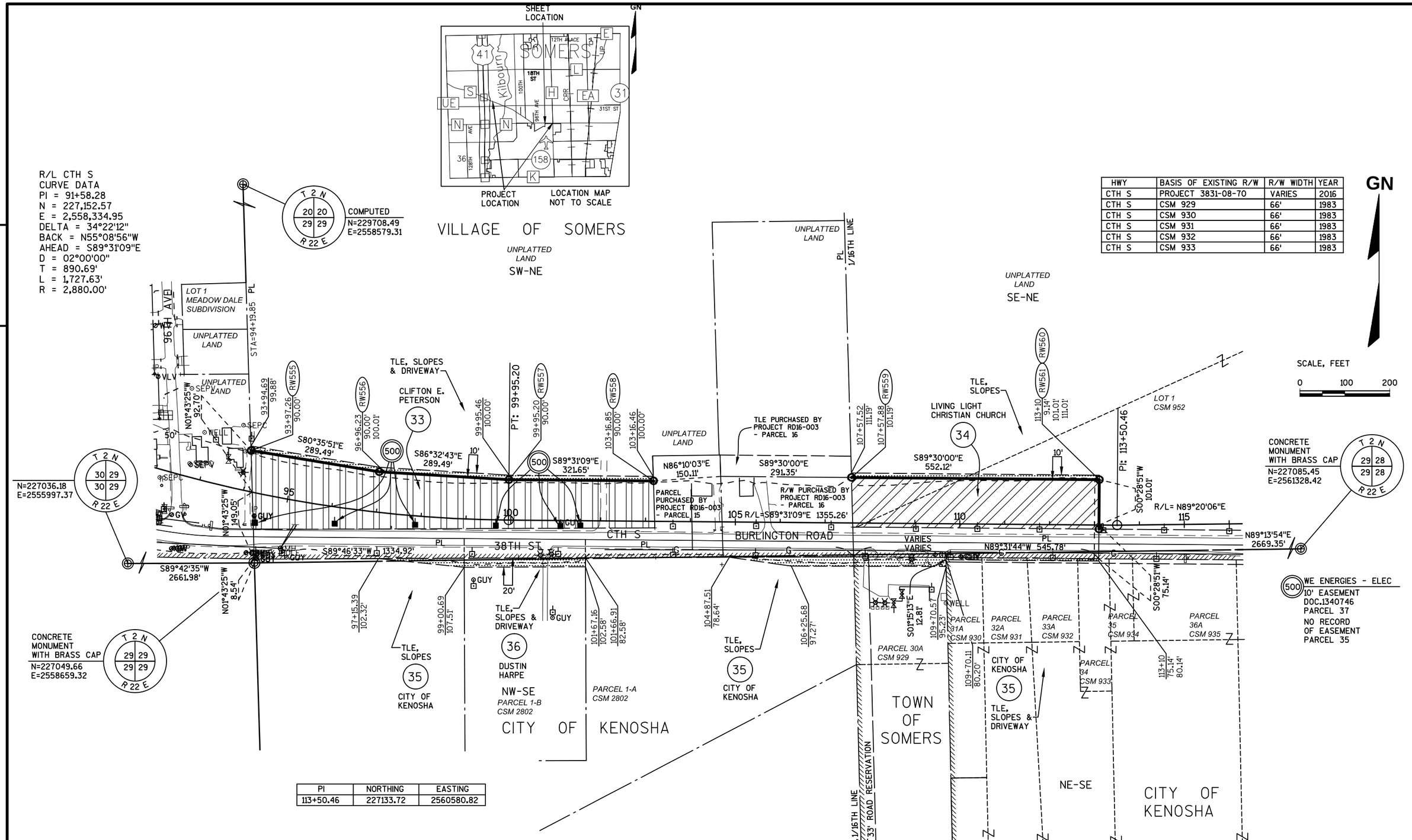

HWY	BASIS OF EXISTING R/W	R/W WIDTH	YEAR
CTH S	PROJECT 3831-08-70	VARIES	2016
CTH S	CSM 929	66'	1983
CTH S	CSM 930	66'	1983
CTH S	CSM 931	66'	1983
CTH S	CSM 932	66'	1983
CTH S	CSM 933	66'	1983

PI	NORTHING	EASTING
113+50.46	227133.72	2560580.82

REVISION DATE: 8/14/2018 10/22/2018 3/8/2019	DATE: 08/03/2018	SCALE, FEET 0 100 200	HWY: CTH S	PROJECT NUMBER: RD16-003(A)	PLAT SHEET: 4.9
	GRID FACTOR: N/A		COUNTY: KENOSHA	CONSTRUCTION PROJECT NUMBER:	PS&E SHEET: 246 E

FILE NAME:S/5166978/DWG/PLAT/TPP200.DWG

CTH S RD16-003(A) 4.9

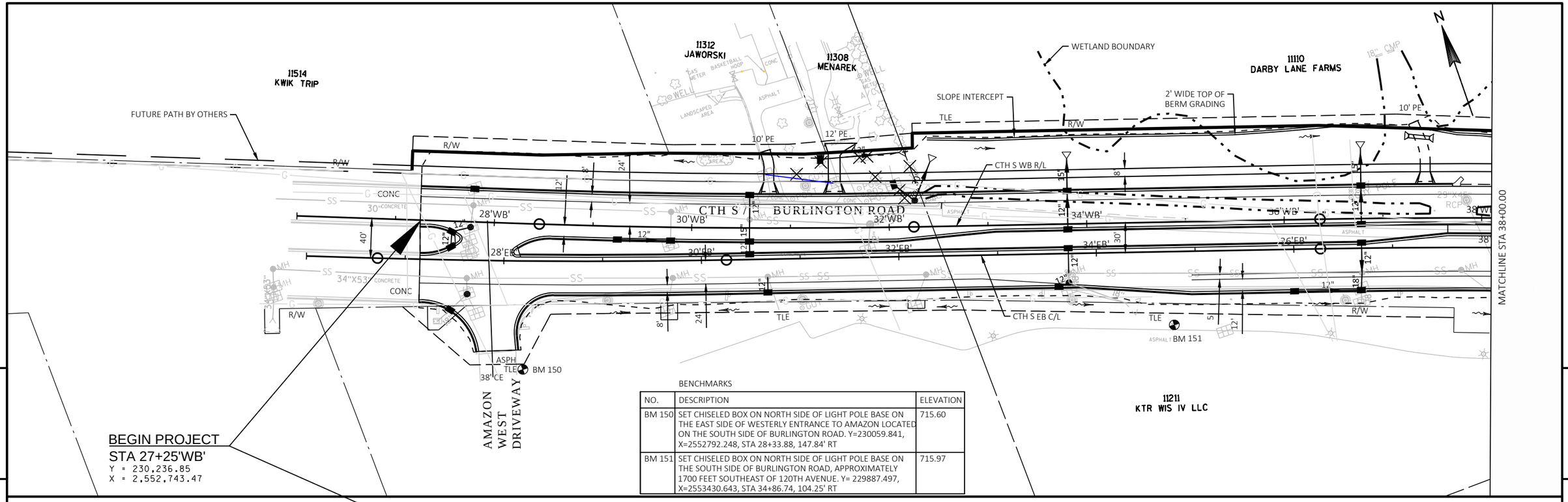

BENCHMARKS

NO.	DESCRIPTION	ELEVATION
BM 150	SET CHISELED BOX ON NORTH SIDE OF LIGHT POLE BASE ON THE EAST SIDE OF WESTERLY ENTRANCE TO AMAZON LOCATED ON THE SOUTH SIDE OF BURLINGTON ROAD. Y=230059.841, X=2552792.248, STA 28+33.88, 147.84' RT	715.60
BM 151	SET CHISELED BOX ON NORTH SIDE OF LIGHT POLE BASE ON THE SOUTH SIDE OF BURLINGTON ROAD, APPROXIMATELY 1700 FEET SOUTHEAST OF 120TH AVENUE. Y= 229887.497, X=2553430.643, STA 34+86.74, 104.25' RT	715.97

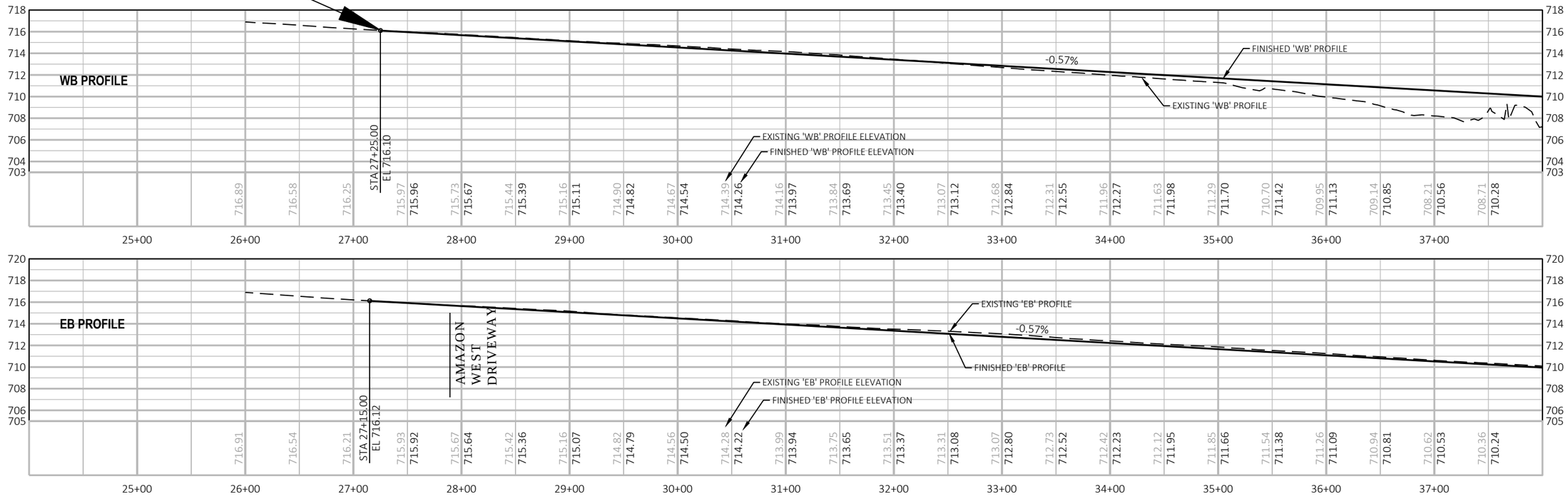

PROJECT NO: RD16-003	HWY: CTH S	COUNTY: KENOSHA	PLAN AND PROFILE: CTH S	SHEET 247	E

FILE NAME : T:\1165811\CIVIL3D\1165811\SHEETSPLAN\050101-PP.DWG
LAYOUT NAME - 1
PLOT DATE : 5/12/2020 2:39 PM PLOT BY : GUILLAMA, TINA PLOT NAME : PLOT SCALE : 1 IN:100 FT

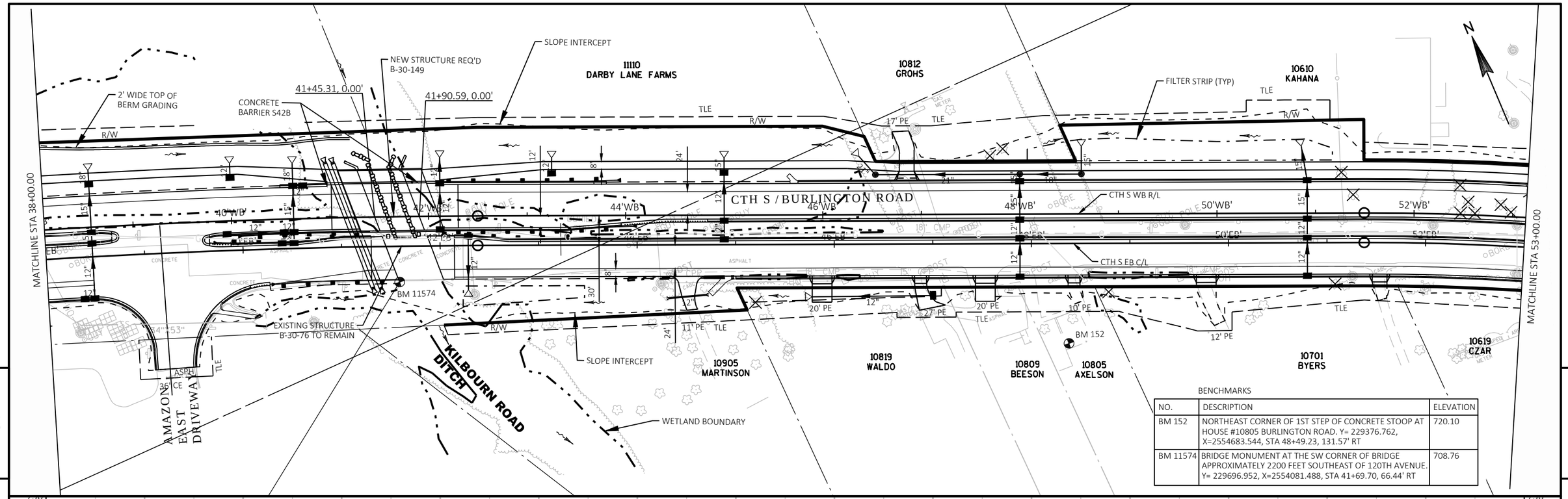

BENCHMARKS

NO.	DESCRIPTION	ELEVATION
BM 152	NORTHEAST CORNER OF 1ST STEP OF CONCRETE STOOP AT HOUSE #10805 BURLINGTON ROAD. Y= 229376.762, X=2554683.544, STA 48+49.23, 131.57' RT	720.10
BM 11574	BRIDGE MONUMENT AT THE SW CORNER OF BRIDGE APPROXIMATELY 2200 FEET SOUTHEAST OF 120TH AVENUE. Y= 229696.952, X=2554081.488, STA 41+69.70, 66.44' RT	708.76

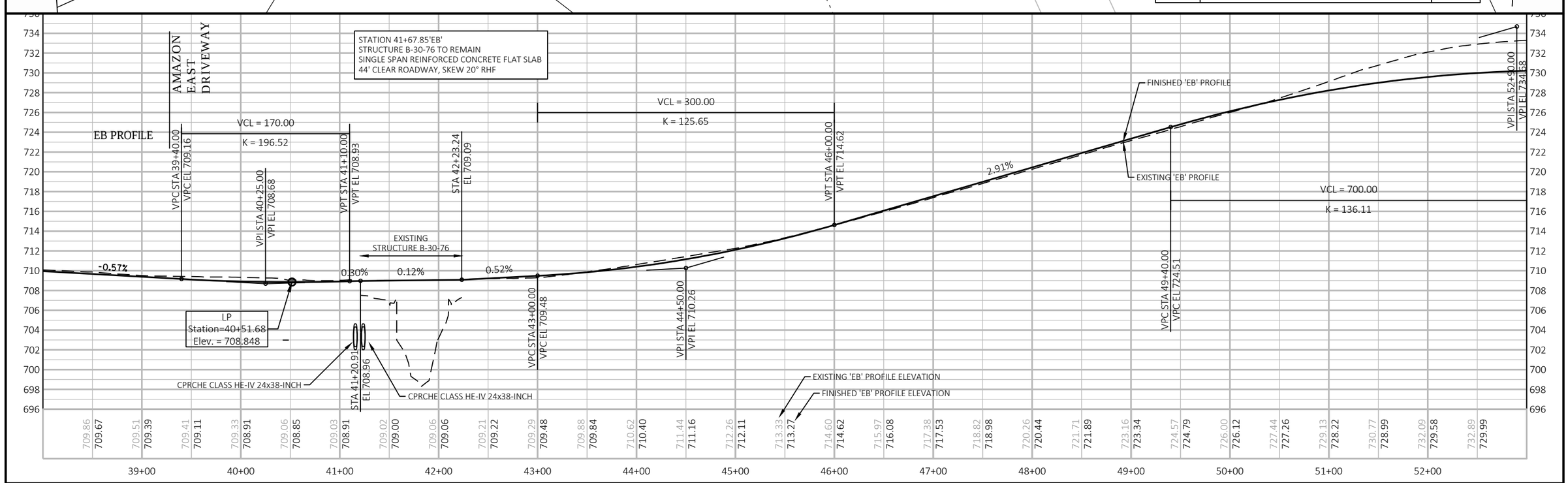

PROJECT NO: RD16-003	HWY: CTH S	COUNTY: KENOSHA	PLAN AND PROFILE: CTH S EASTBOUND	SHEET 248	E

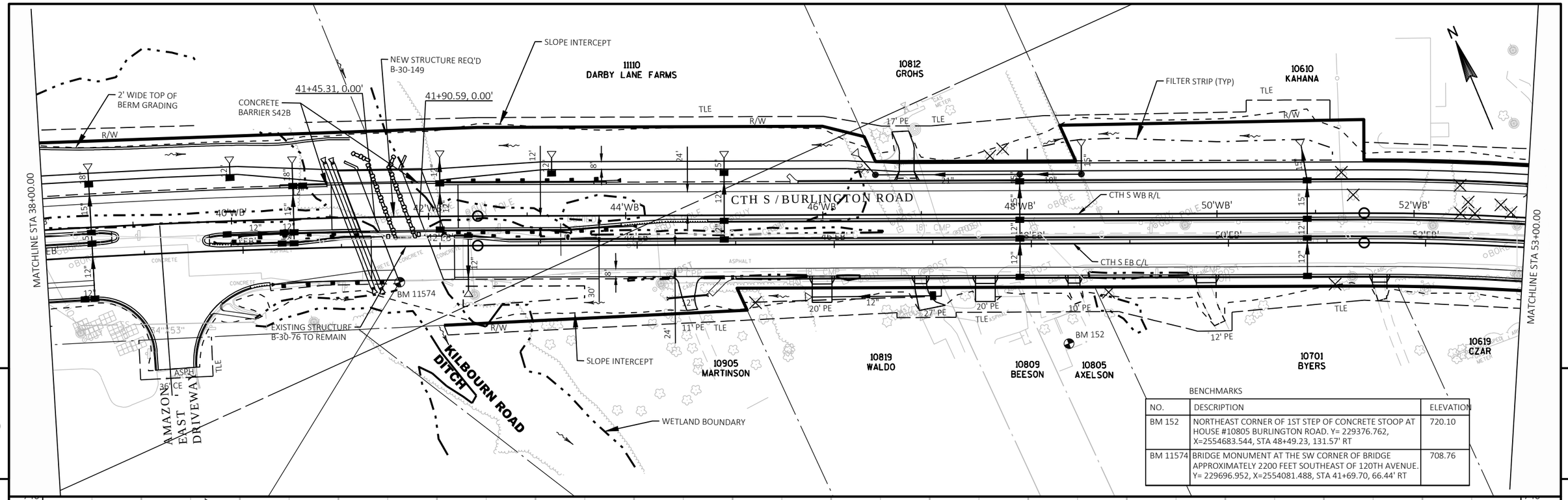

BENCHMARKS

NO.	DESCRIPTION	ELEVATION
BM 152	NORTHEAST CORNER OF 1ST STEP OF CONCRETE STOOP AT HOUSE #10805 BURLINGTON ROAD. Y= 229376.762, X=2554683.544, STA 48+49.23, 131.57' RT	720.10
BM 11574	BRIDGE MONUMENT AT THE SW CORNER OF BRIDGE APPROXIMATELY 2200 FEET SOUTHEAST OF 120TH AVENUE. Y= 229696.952, X=2554081.488, STA 41+69.70, 66.44' RT	708.76

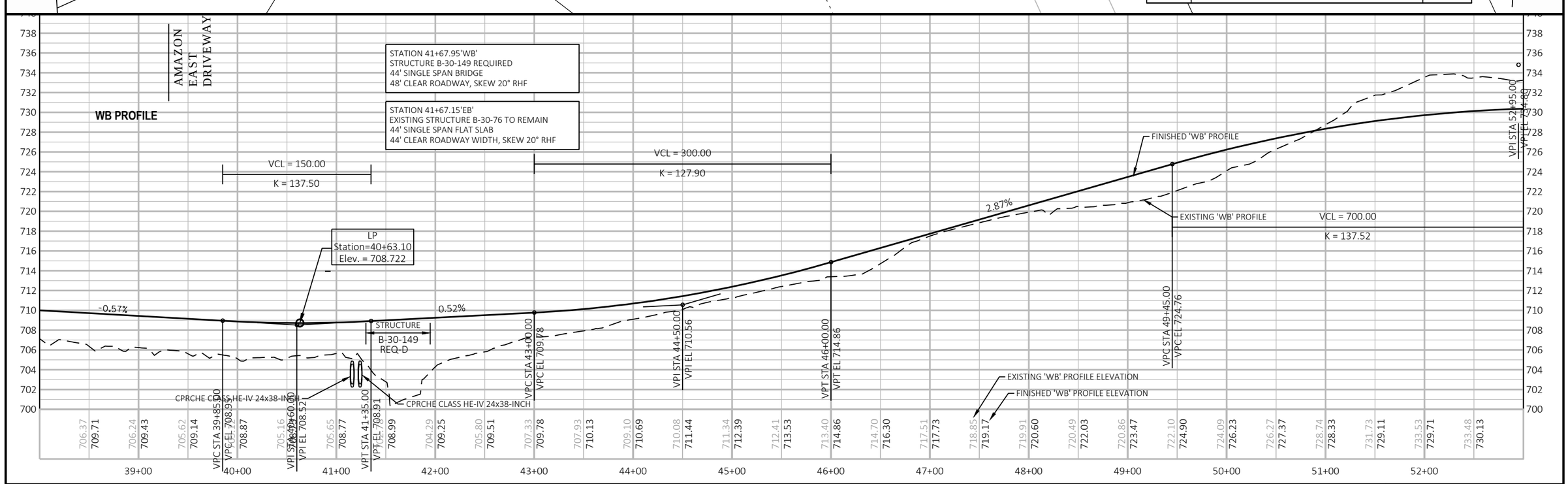

PROJECT NO: RD16-003	HWY: CTH S	COUNTY: KENOSHA	PLAN AND PROFILE: CTH S WESTBOUND	SHEET 249	E

FILE NAME : T:\1165811\CIVIL3D\1165811\SHEETSPLAN\050101-PP.DWG
LAYOUT NAME - 2 (wb)
PLOT DATE : 5/12/2020 2:40 PM
PLOT BY : GUILLAMA, TINA
PLOT NAME :
PLOT SCALE : 1 IN:100 FT
WISDOT/CADDS SHEET 44

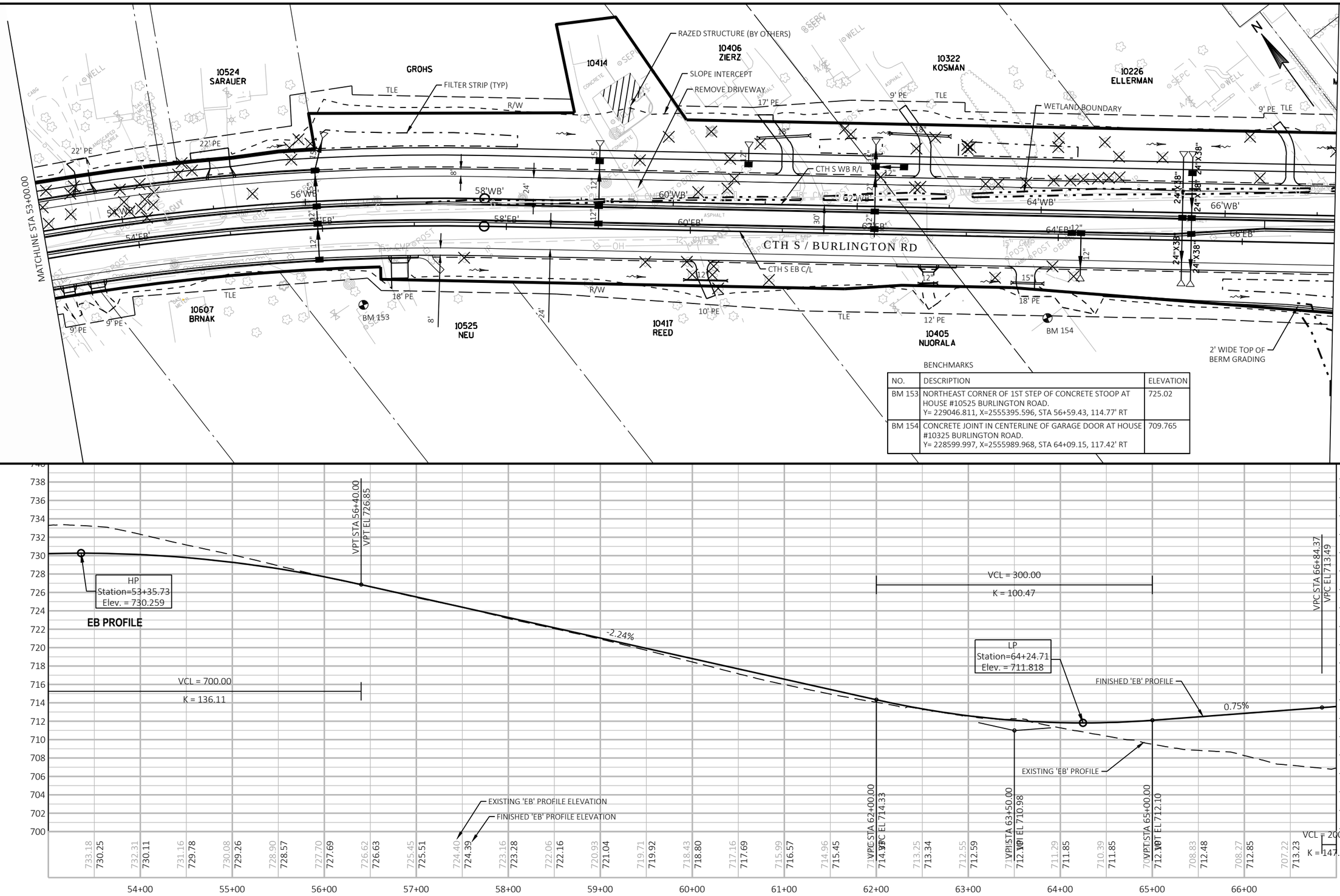

PROJECT NO: RD16-003	HWY: CTH S	COUNTY: KENOSHA	PLAN AND PROFILE: CTH S EASTBOUND	SHEET 250	E

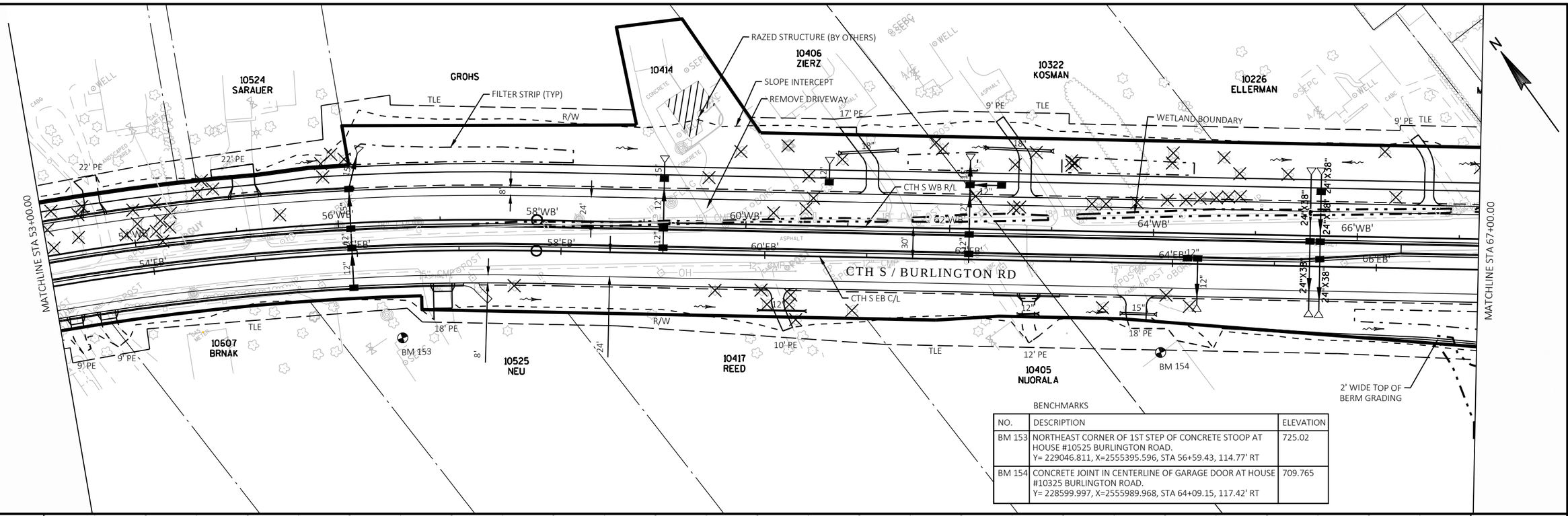

BENCHMARKS

NO.	DESCRIPTION	ELEVATION
BM 153	NORTHEAST CORNER OF 1ST STEP OF CONCRETE STOOP AT HOUSE #10525 BURLINGTON ROAD. Y= 229046.811, X=2555395.596, STA 56+59.43, 114.77' RT	725.02
BM 154	CONCRETE JOINT IN CENTERLINE OF GARAGE DOOR AT HOUSE #10325 BURLINGTON ROAD. Y= 228599.997, X=2555989.968, STA 64+09.15, 117.42' RT	709.765

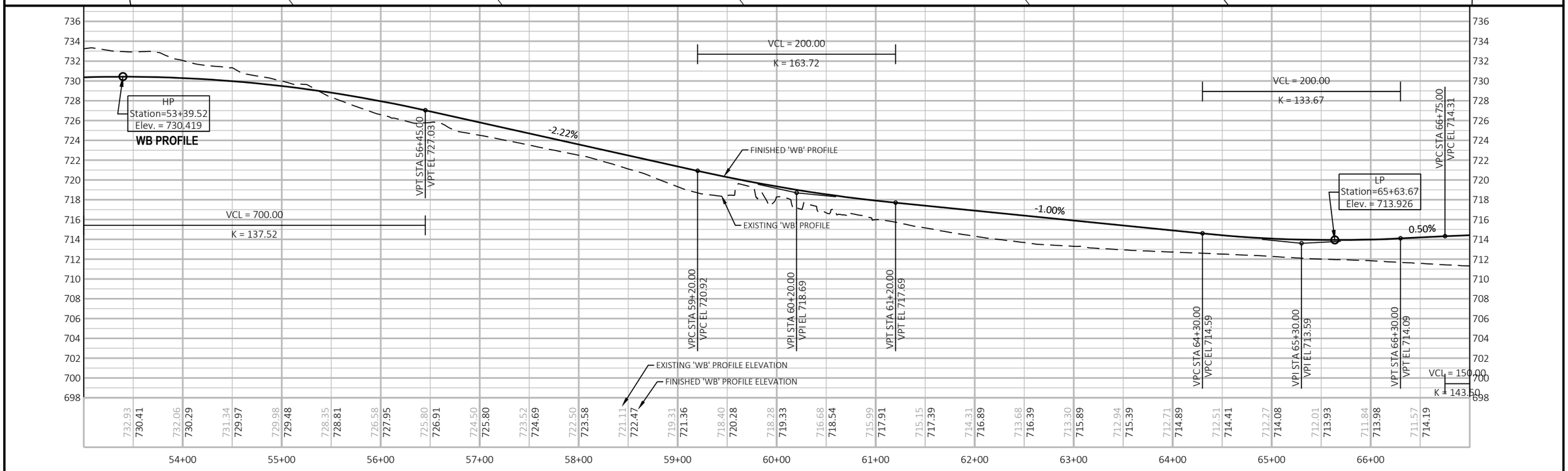

PROJECT NO: RD16-003	HWY: CTH S	COUNTY: KENOSHA	PLAN AND PROFILE: CTH S WESTBOUND	SHEET 251	E

FILE NAME : T:\1165811\CIVIL3D\1165811\SHEETSPLAN\050101-PP.DWG
LAYOUT NAME - 3 (wb)

PLOT DATE : 5/12/2020 2:41 PM PLOT BY : GUILLAMA, TINA PLOT NAME : PLOT SCALE : 1 IN:100 FT

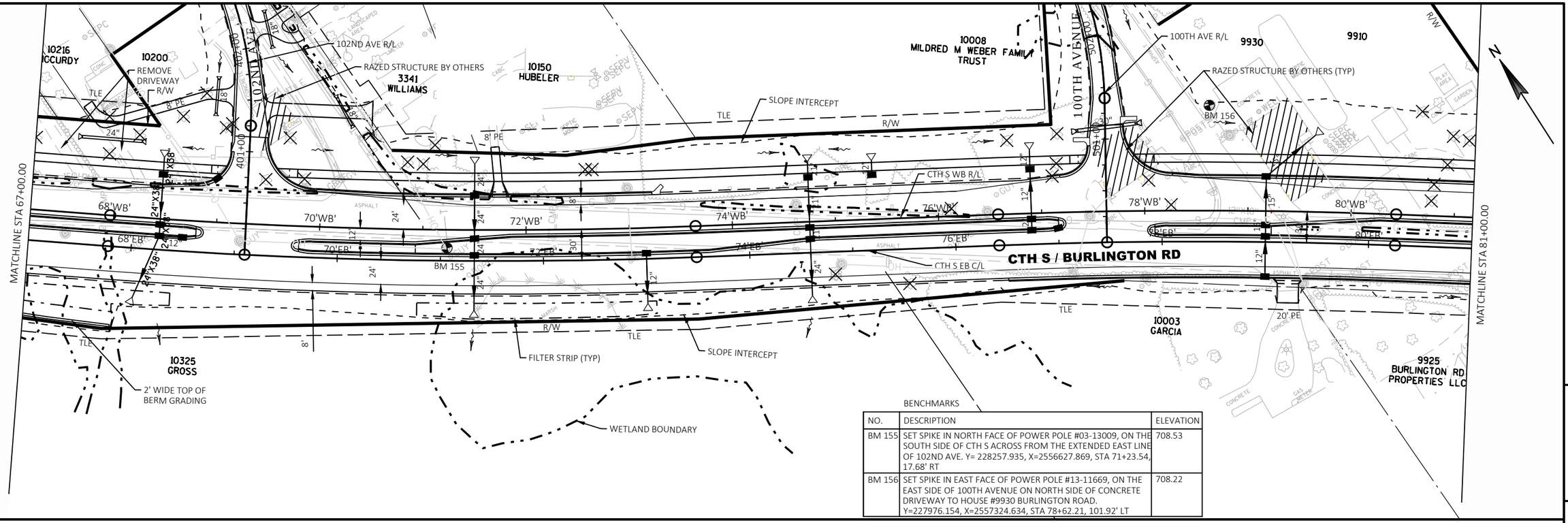

BENCHMARKS

NO.	DESCRIPTION	ELEVATION
BM 155	SET SPIKE IN NORTH FACE OF POWER POLE #03-13009, ON THE SOUTH SIDE OF CTH S ACROSS FROM THE EXTENDED EAST LINE OF 102ND AVE. Y= 228257.935, X=2556627.869, STA 71+23.54, 17.68' RT	708.53
BM 156	SET SPIKE IN EAST FACE OF POWER POLE #13-11669, ON THE EAST SIDE OF 100TH AVENUE ON NORTH SIDE OF CONCRETE DRIVEWAY TO HOUSE #9930 BURLINGTON ROAD. Y=227976.154, X=2557324.634, STA 78+62.21, 101.92' LT	708.22

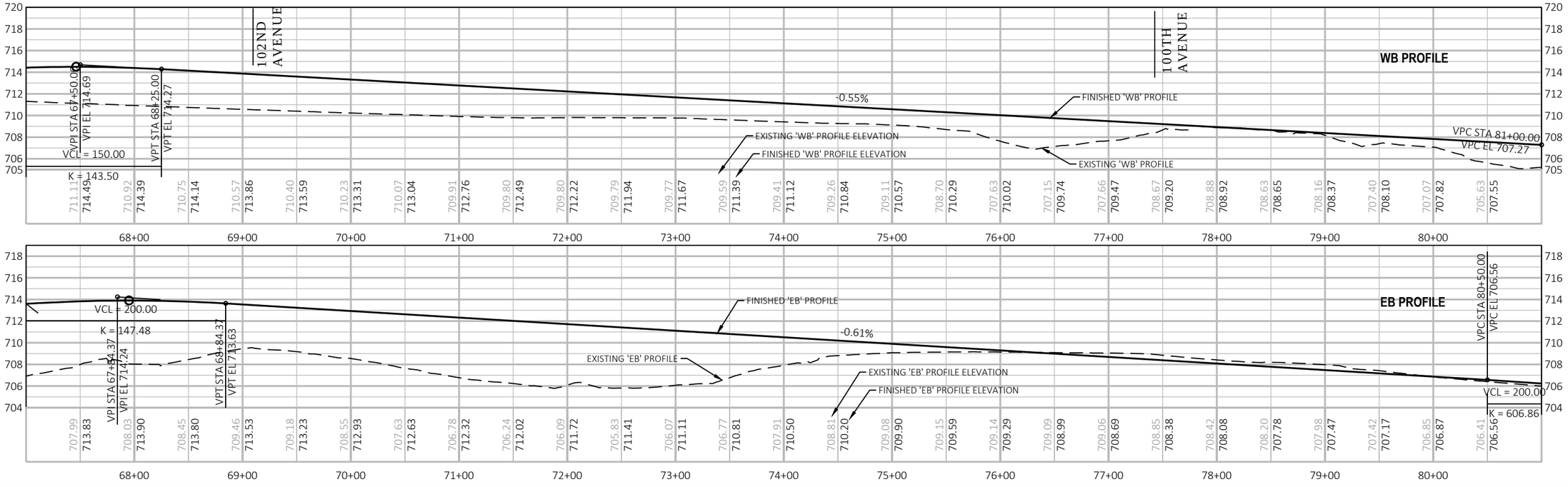

PROJECT NO: RD16-003	HWY: CTH S	COUNTY: KENOSHA	PLAN AND PROFILE: CTH S	SHEET 252	E

FILE NAME : T:\1165811\CIVIL3D\1165811\SHEETSPLAN\050101-PP.DWG
LAYOUT NAME - 4

PLOT DATE : 5/12/2020 2:42 PM PLOT BY : GUILLAMA, TINA PLOT NAME : PLOT SCALE : 1 IN:100 FT

WISDOT/CADDS SHEET 44

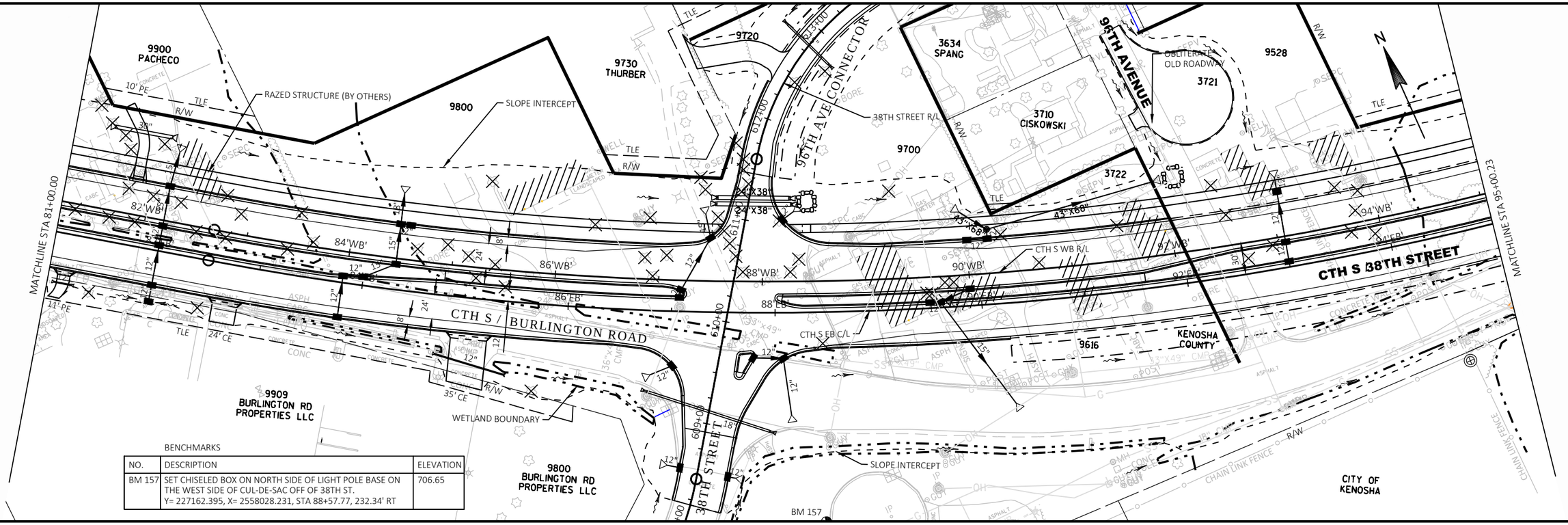

BENCHMARKS

NO.	DESCRIPTION	ELEVATION
BM 157	SET CHISELED BOX ON NORTH SIDE OF LIGHT POLE BASE ON THE WEST SIDE OF CUL-DE-SAC OFF OF 38TH ST. Y= 227162.395, X= 2558028.231, STA 88+57.77, 232.34' RT	706.65

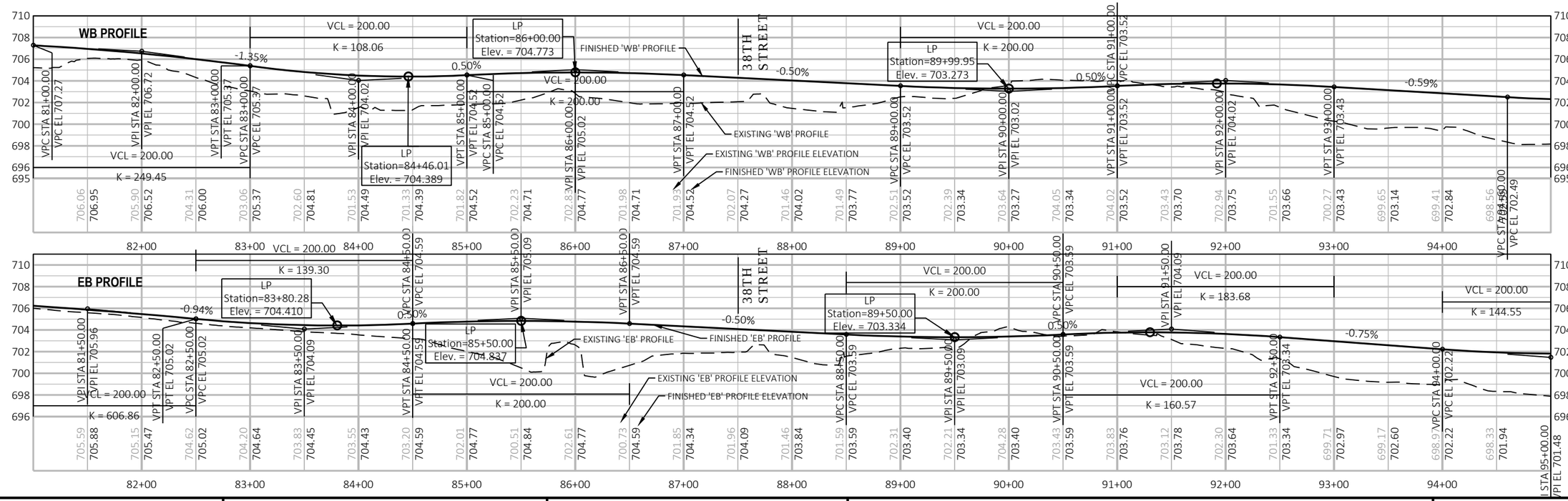

PROJECT NO: RD16-003	HWY: CTH S	COUNTY: KENOSHA	PLAN AND PROFILE: CTH S	SHEET 253	E

FILE NAME : T:\1165811\CIVIL3D\1165811\SHEETSPLAN\050101-PP.DWG
LAYOUT NAME - 5

PLOT DATE : 5/12/2020 2:42 PM PLOT BY : GUILLAMA, TINA PLOT NAME : PLOT SCALE : 1 IN:100 FT

WISDOT/CADDS SHEET 44

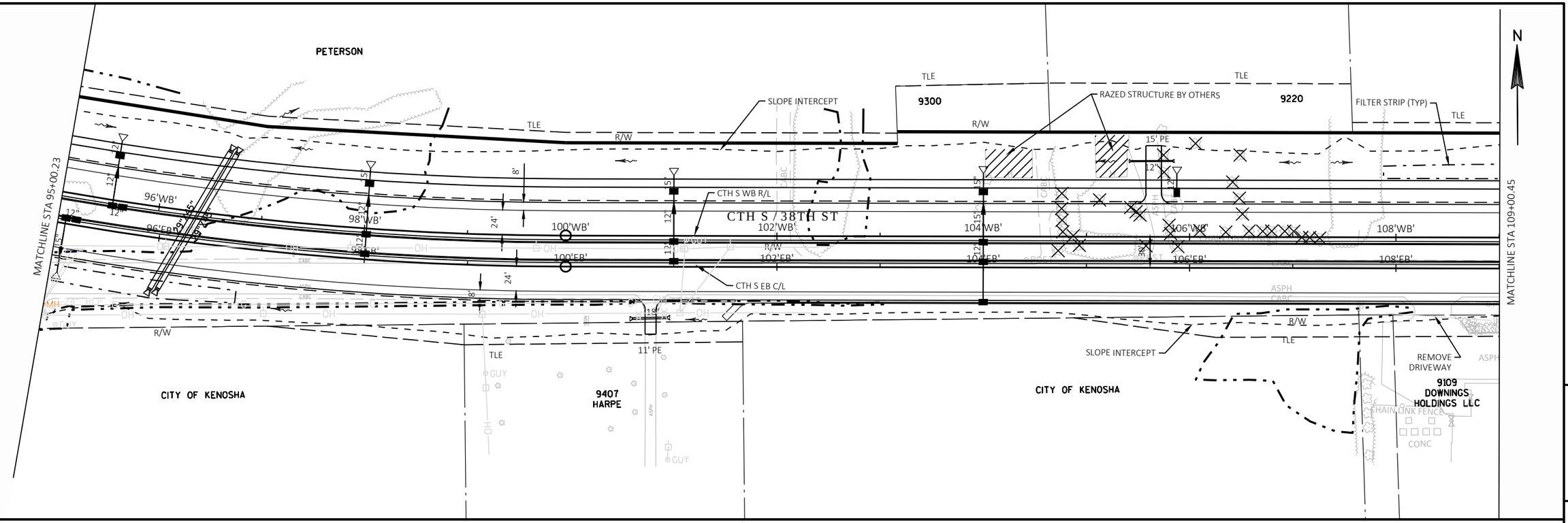

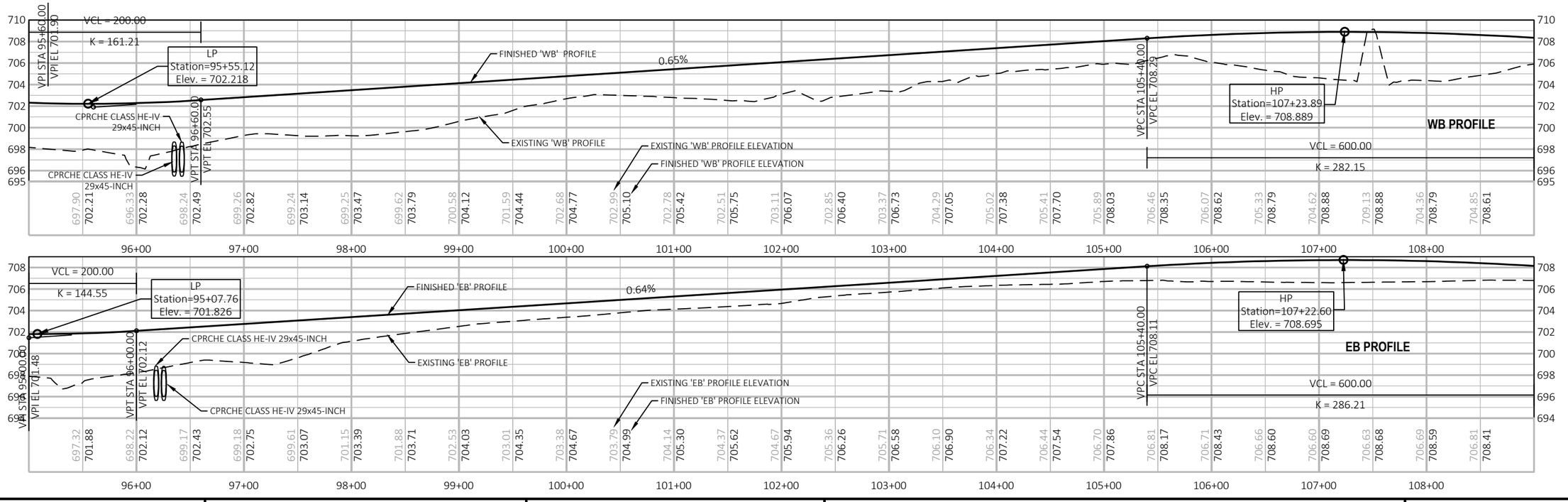

PROJECT NO: RD16-003	HWY: CTH S	COUNTY: KENOSHA	PLAN AND PROFILE: CTH S	SHEET 254	E

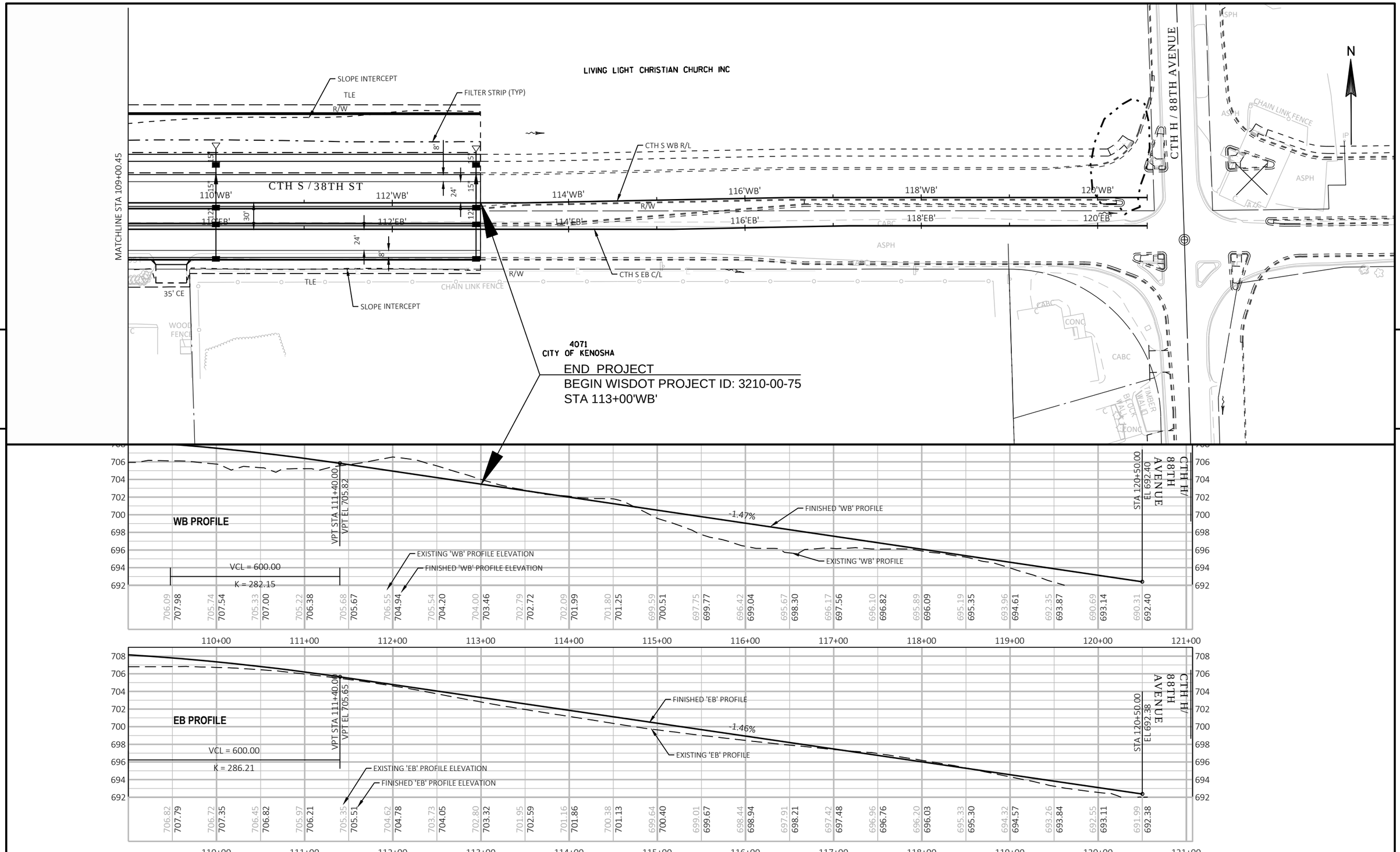

5

5

PROJECT NO: RD16-003	HWY: CTH S	COUNTY: KENOSHA	PLAN AND PROFILE: CTH S	SHEET 255	E

FILE NAME : T:\1165811\CIVIL3D\1165811\SHEETSPLAN\050101-PP.DWG
LAYOUT NAME - 7

PLOT DATE : 5/12/2020 2:44 PM PLOT BY : GUILLAMA, TINA PLOT NAME : PLOT SCALE : 1 IN:100 FT

WISDOT/CADDS SHEET 44

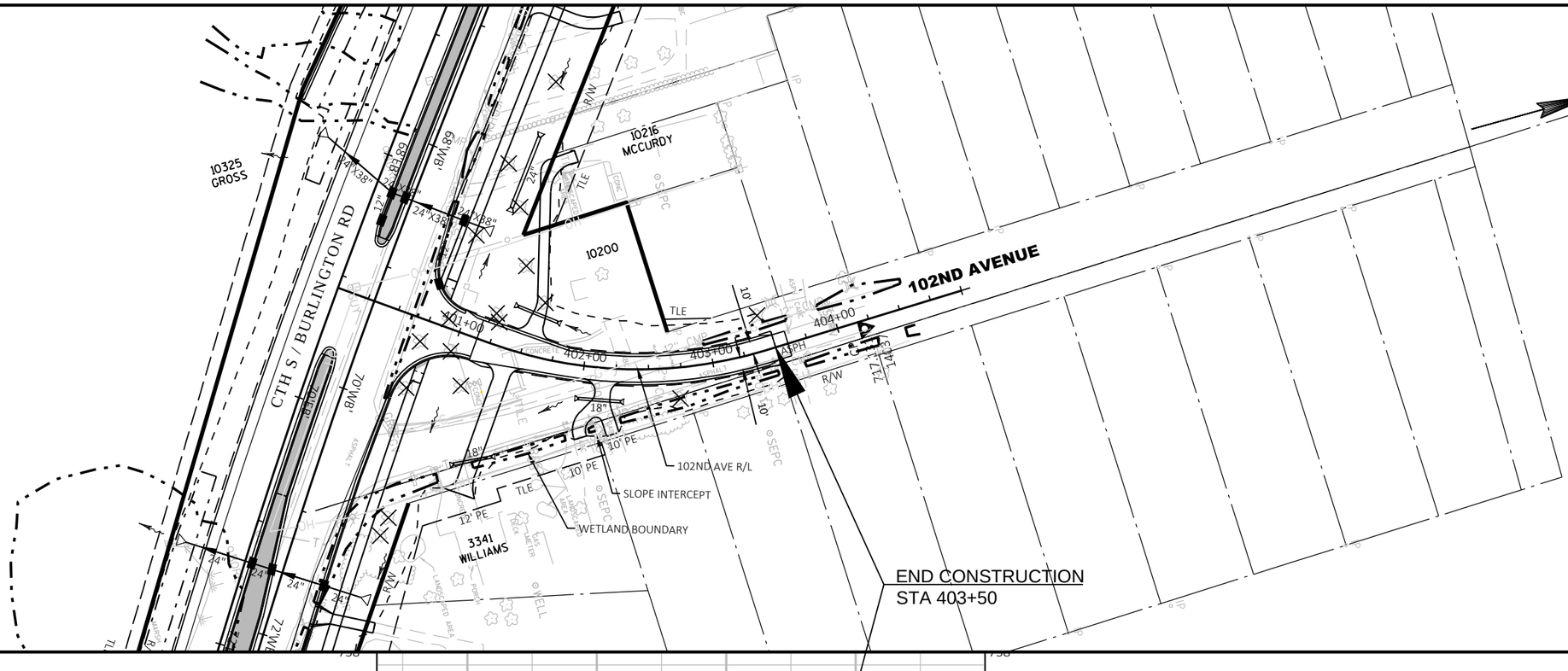

PROJECT NO: RD16-003	HWY: CTH S	COUNTY: KENOSHA	PLAN AND PROFILE: 102ND AVENUE	SHEET 256	E

FILE NAME : T:\1165811\CIVIL3D\1165811\SHEETSPLAN\050102-PP.DWG
LAYOUT NAME - 8

PLOT DATE : 5/12/2020 2:51 PM PLOT BY : GUILLAMA, TINA PLOT NAME : PLOT SCALE : 1 IN:100 FT

WISDOT/CADDS SHEET 44

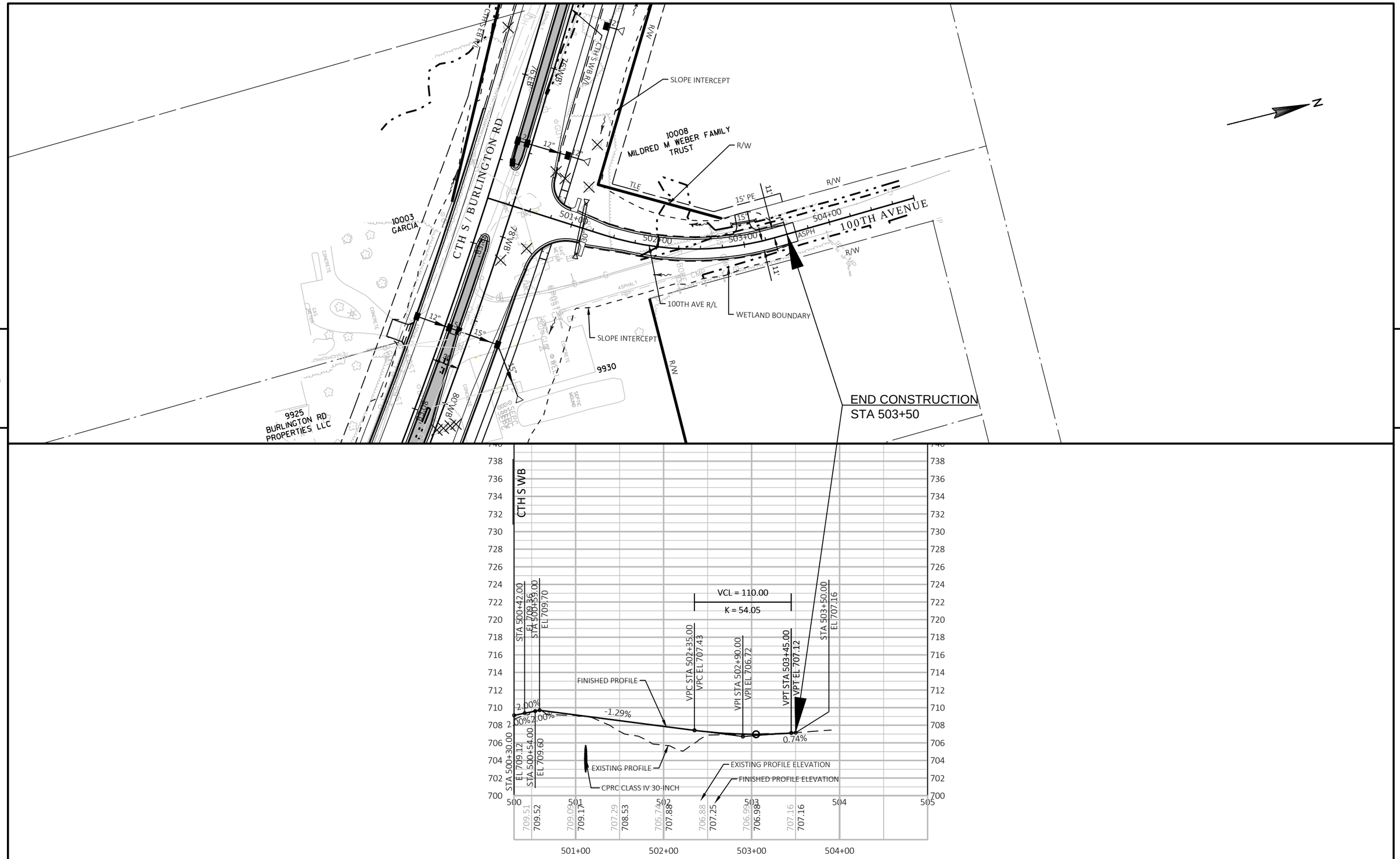

PROJECT NO: RD16-003	HWY: CTH S	COUNTY: KENOSHA	PLAN AND PROFILE: 100TH AVENUE	SHEET 257	E

FILE NAME : T:\1165811\CIVIL3D\1165811\SHEETSPLAN\050102-PP.DWG
LAYOUT NAME - 9

PLOT DATE : 5/12/2020 2:51 PM PLOT BY : GUILLAMA, TINA PLOT NAME : PLOT SCALE : 1 IN:100 FT

WISDOT/CADDS SHEET 44

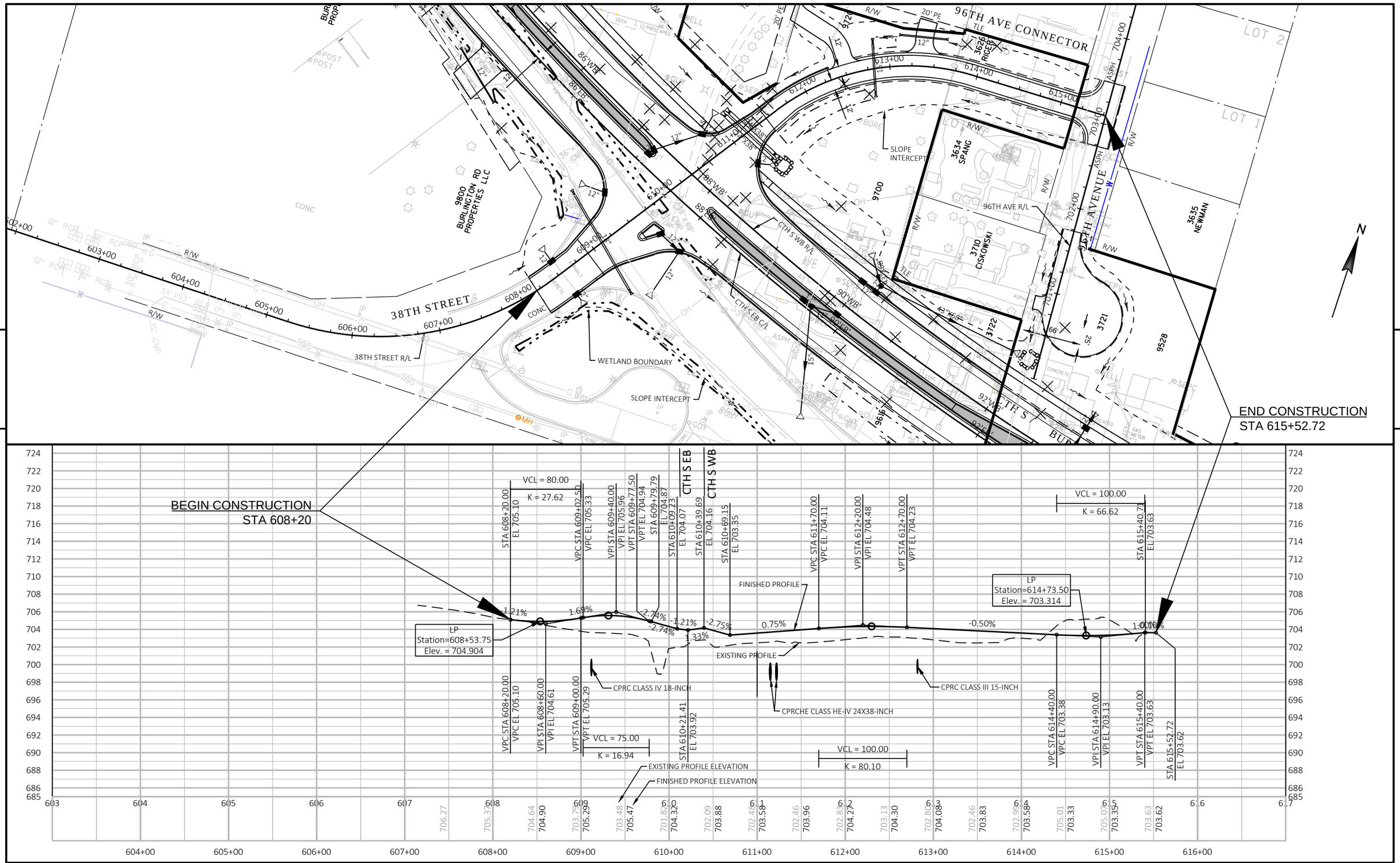

PROJECT NO: RD16-003	HWY: CTH S	COUNTY: KENOSHA	PLAN AND PROFILE: 38TH STREET	SHEET 258	E

NOTES:

1. ALL SIGNS TYPE II - TYPE H REFLECTIVE
2. COLOR
   BACKGROUND - GREEN
   MESSAGE - WHITE
3. MESSAGE SERIES - B

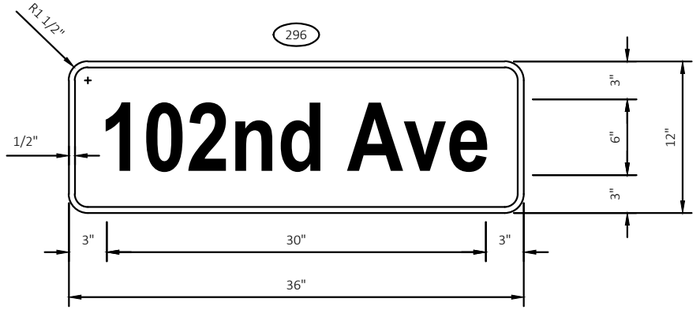

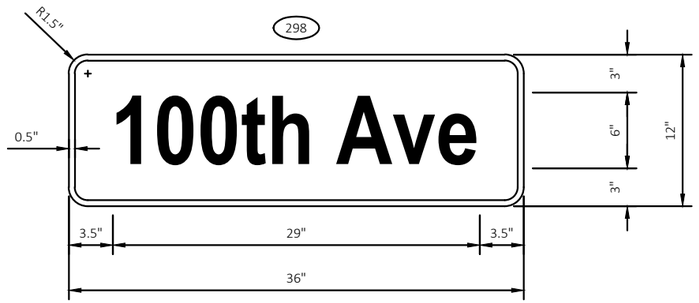

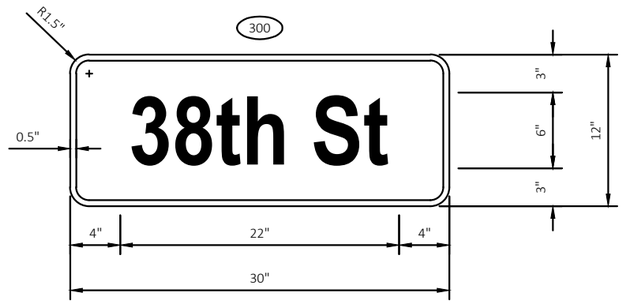

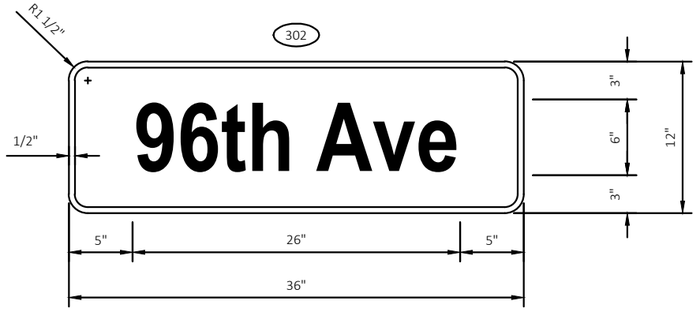

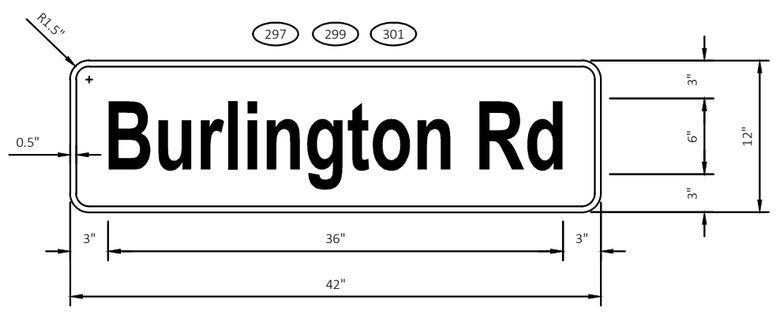

TYPICAL ASSEMBLIES

J1-1

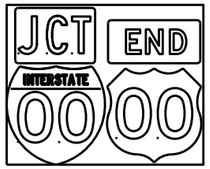

J1-2

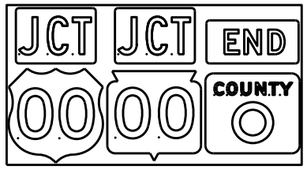

J1-3

J2-1

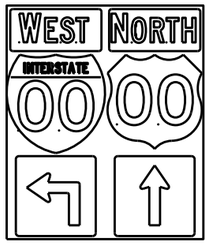

J2-2

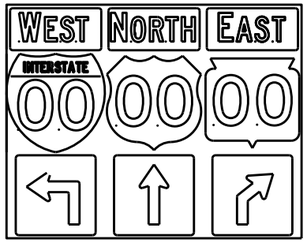

J2-3

JV

(Typical Vertical J-Assembly
See Note 10 and 11)

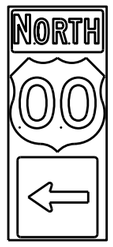

J3-1

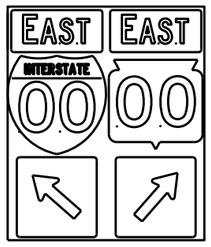

J3-2

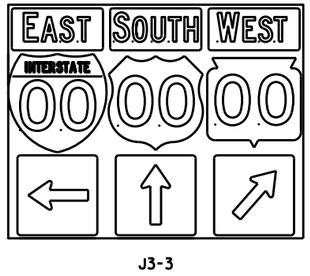

J3-3

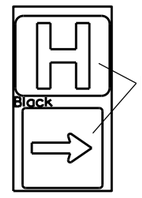

JH-1

J4-1

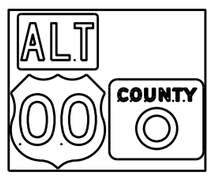

J4-2

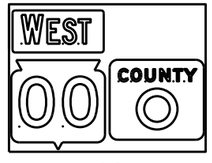

J4-2

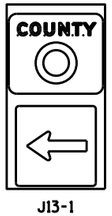

J13-1

J12-1

J32-1

J33-1

J23-1

J22-1

[blue background with interstate]

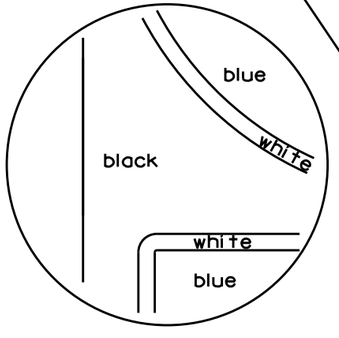

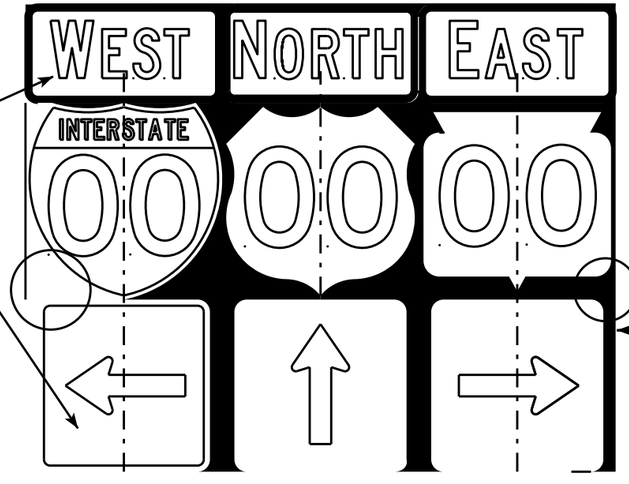

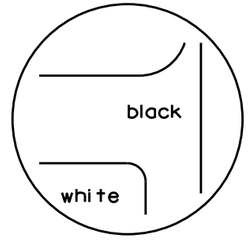

[black background]

NOTES

1. Signs are Type II - Type H Reflective - reference WIS DOT Standard Specification for HIGHWAY and STRUCTURE CONSTRUCTION latest edition.
2. Color:
   Background - Black Non-reflective
   Message - see Note 5
3. Message Series - See Note 5
4. Corners shall be square or rounded if base material is plywood. If base material is metal the corners shall be rounded.
5. The colors and message spacing on each marker shall be according to the applicable route marker panel specifications.
6. Certain marker heads require the component pieces to be the same color. As an example, all the components used with an M1-1 Interstate marker shall be blue.
7. Single panel j-assemblies shall only be used with route marker shields that are same size. If the route marker shields are different size use multiple piece component.
8. Route assemblies that have 24 inch route shields and have dimensions greater than 48 inches (both vertical and horizontal) shall have one horizontal splice between the arrows and route shields. Vertical splices shall not be used on route assemblies with a horizontal dimension of 144 inches or less. The contractor shall not use more than one vertical joint per sign and the joint shall be between route shields.
9. Route assemblies that have 36 inch shields and have dimensions greater than 48 inchs (both vertical and horizontal) shall have two horizontal splices. One horizontal splice shall be between the cardinal direction and route shields and the other horizontal splice shall be between the arrows and route shields. Vertical splices shall not be used on route assemblies with a horizontal dimension of 144 or less. The contractor shall not use more than one vertical joint per sign and the joint shall be between route shields.
10. All Vertical J Assemblies are given a Sign Code of JV
11. For JV Assemblies that have a mixture of Interstate and non Interstate shields, arrows and cardinals shall be white on blue.

ROUTE MARKERS & COMPONENTS
IN TYPICAL ASSEMBLIES

WISCONSIN DEPT OF TRANSPORTATION

APPROVED Matthew R Rauch
for State Traffic Engineer

DATE 2/06/14 PLATE NO. A2-1S.8

PROJECT NO: | SHEET NO: E

FILE NAME : C:\CAEFiles\Projects\tr_stdplate\A21S.DGN PLOT DATE : 06-FEB-2014 14:10 PLOT BY : mscsja PLOT NAME :
WISDOT/CADDS SHEET 42

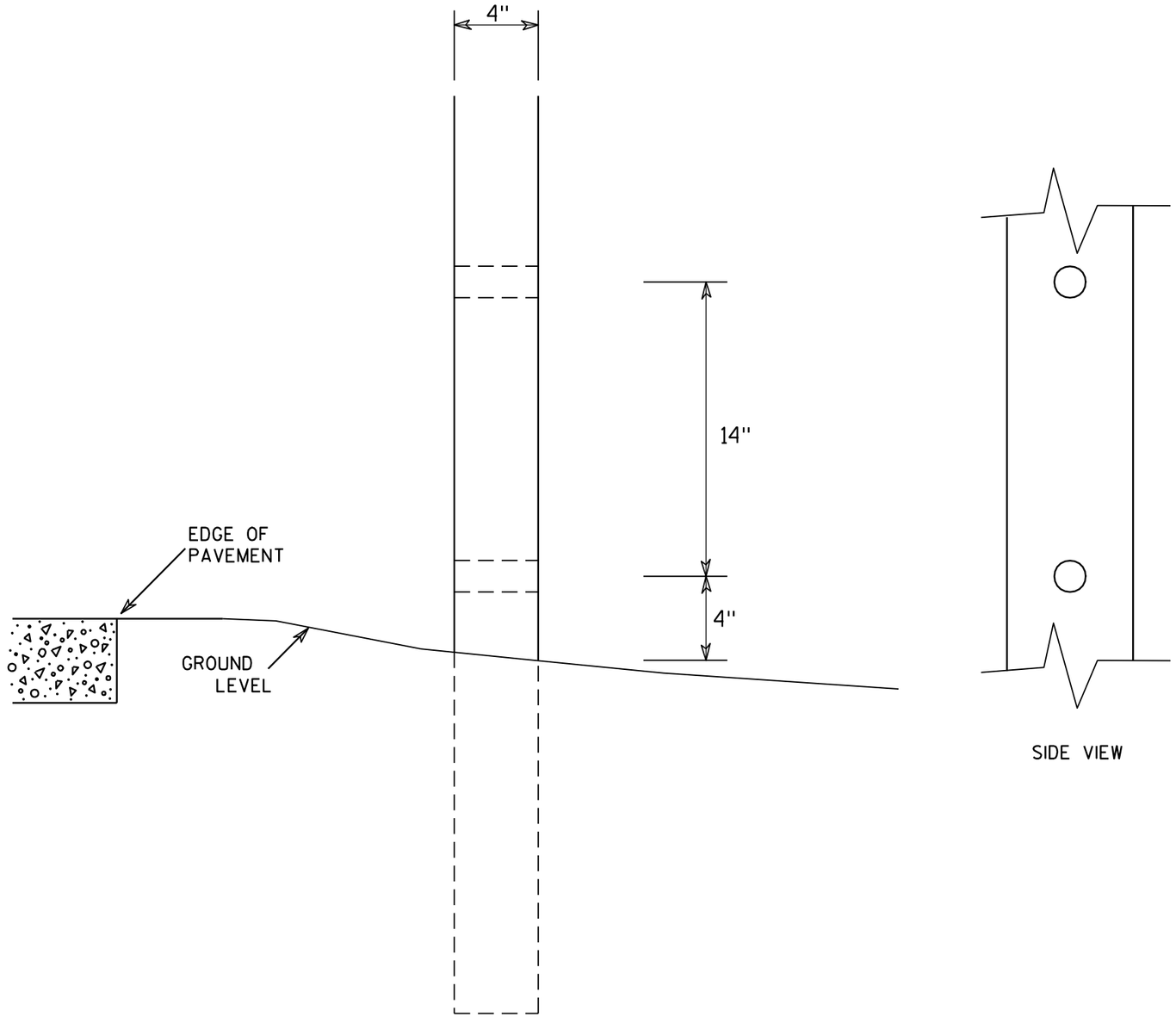

SIDE VIEW

GENERAL NOTES

1. All 4 x 6 Wood Posts shall be modified by having two 1½" diameter holes drilled perpendicular to the roadway centerline.

7

7

4 X 6 WOOD POST MODIFICATIONS

WISCONSIN DEPT OF TRANSPORTATION

APPROVED Chester J Spang
for State Traffic Engineer

DATE 3/27/97 PLATE NO. A4-11.2

PROJECT NO:	HWY:	COUNTY:		SHEET NO: 261	E

URBAN AREA

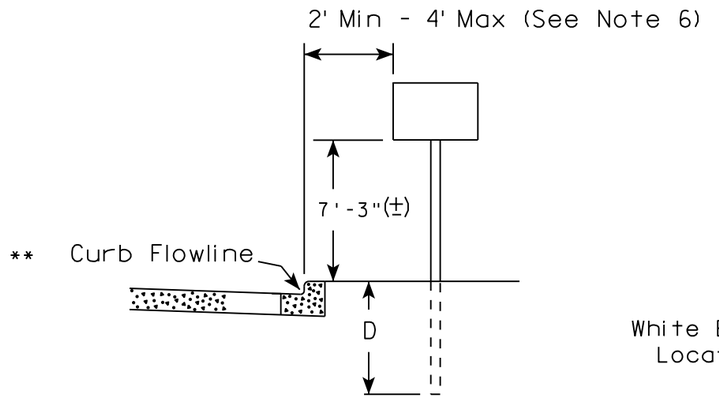

RURAL AREA (See Note 2)

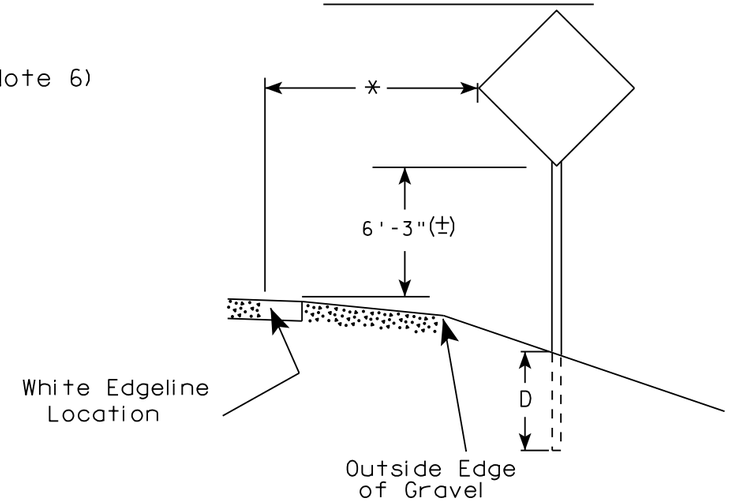

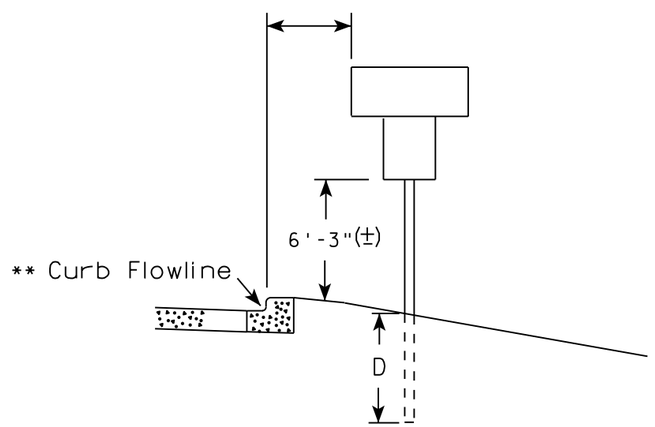

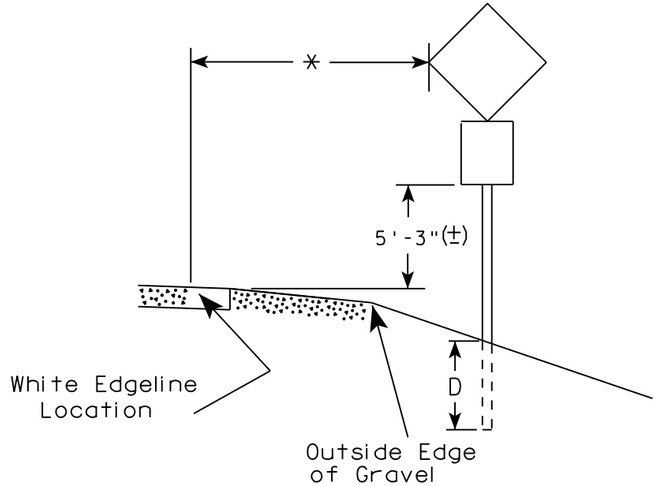

** The existence of curb and gutter does not in itself mandate the vertical clearance illustrated. That height is typically measured where there is sidewalk adjacent to the roadway or parking is permitted. In the absence of sidewalk vertical clearance is measured from the top of the curb. Offset of signs is measured from the flow line.

* 6 feet from edge of a paved shoulder or 12 feet from the edge of pavement (edge line location) or 2 feet from outside edge of gravel, whichever is greater unless directed by project engineer.

POST EMBEDMENT DEPTH

Area of Sign Installation (Sq.Ft.)	D (Min)
20 or Less	4'
Greater than 20	5'

GENERAL NOTES

1. Signs wider than 4 feet or 20 sq.ft or larger, shall be mounted on multiple posts. Refer to plate A4-4.
2. If signs are mounted on barrier wall, see A4-10 sign plate.
3. For expressways and freeways, mounting height is 7'- 3" (±) or 6'-3" (±) depending upon existence of a sub-sign.
4. J-Assemblies are considered to be one sign for mounting height.
5. Minimum mounting height for signs mounted on traffic signal poles is 5'- 3" (±).
6. Offset distance shall be consistent with existing signs or consistent throughout length of project.
7. The (±) tolerance for mounting height is 3 inches.
8. Folding signs shall be mounted at a height of 5'-3" (±) or as directd by the Engineer.
9. The Double Arrow sign (W12-1) shall be mounted at a height of 2'-3" (±). The Chevron sign (W1-8), Roundabout Chevron panel (R6-4B), Enhanced Reference Markers, Clearance Markers (W5-52), Mile Markers (D10 series), In Road Object Markers (W5-54) & End of Road Markers (W5-56) shall be mounted at a height of 4'-3" (±).

TYPICAL INSTALLATION OF PERMANENT TYPE II SIGNS ON SINGLE POSTS

WISCONSIN DEPT OF TRANSPORTATION

APPROVED Matthew R Rauch
for State Traffic Engineer

DATE 8/21/17 PLATE NO. A4-3.21

7

7

PROJECT NO:	HWY:	COUNTY:		SHEET NO: 262	E

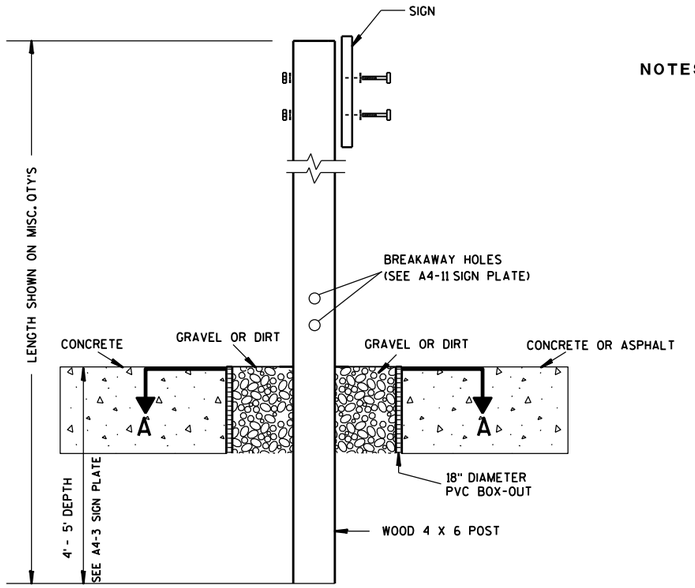

ELEVATION VIEW

DETAIL OF WOOD 4 X 6 SIGN POST IN BOX-OUT

NOTES:
1. ALL MATERIAL TO BE APPROVED BY ENGINEER PRIOR TO INSTALLATION
2. SEE SIGN PLATE A4-8 FOR SIGN HARDWARE REQUIREMENTS
3. 18 INCH X 18 INCH SQUARE BOX-OUTS MAY BE USED FOR INSTALLATIONS IN EXISTING CONCRETE OR ASPHALT LOCATIONS.

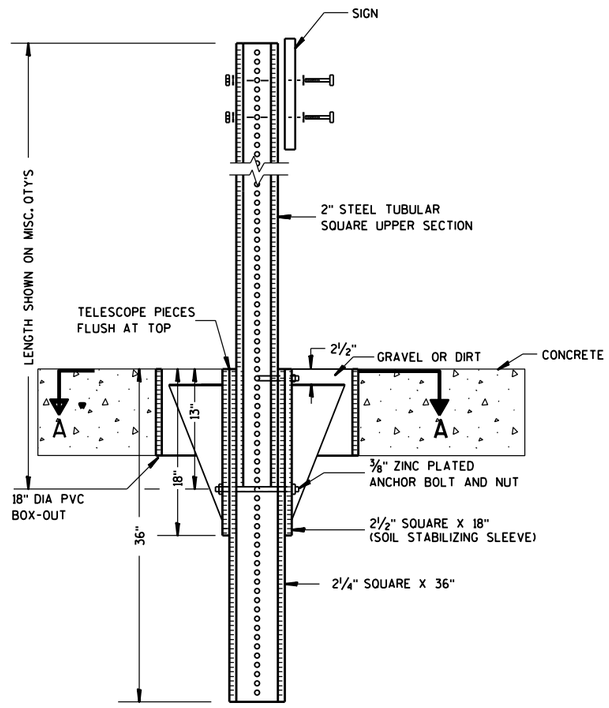

ELEVATION VIEW

DETAIL OF STEEL 2 X 2 SIGN POST IN BOX-OUT

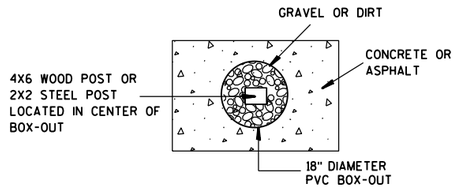

PLAN VIEW

FOR NEW CONCRETE/ASPHALT INSTALLATIONS

SIGN POST BOX-OUTS A4-3B

WISCONSIN DEPT OF TRANSPORTATION

APPROVED Matthew R Rauch
for State Traffic Engineer

DATE 1/27/14 PLATE NO. A4-3B.1

PROJECT NO:	HWY:	COUNTY:		SHEET NO:	E

FILE NAME : C:\CAEFiles\Projects\tr_stdplate\A43B.DGN PLOT DATE : 27-JAN-2014 09:48 PLOT BY : mscsja PLOT NAME : PLOT SCALE : 13.659812:1.000000 WISDOT/CADDS SHEET 42

URBAN AREA

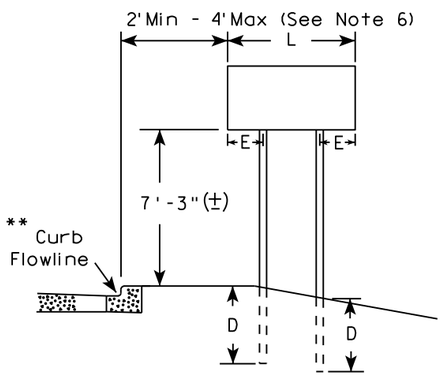

RURAL AREA (See Note 3)

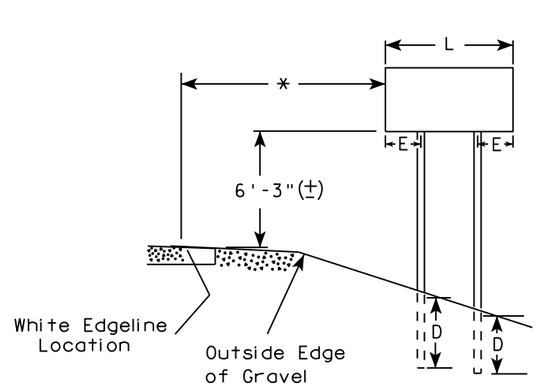

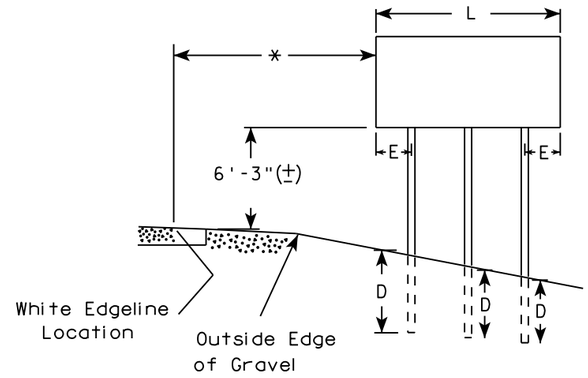

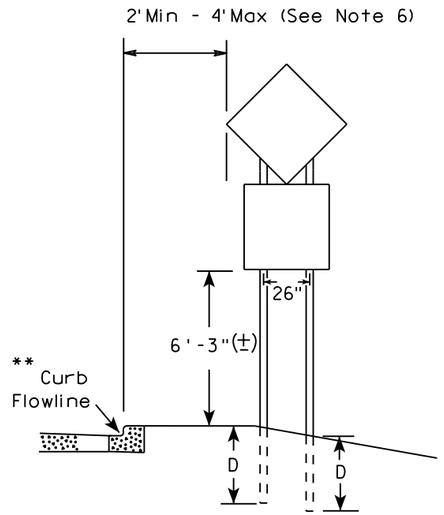

48" DIAMOND WARNING SIGN

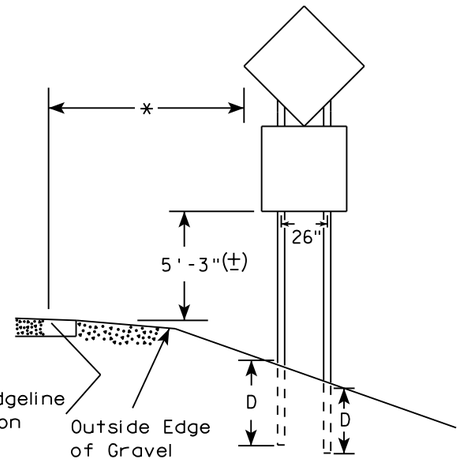

48" DIAMOND WARNING SIGN

SIGN SHAPE OTHER THAN DIAMOND (TWO POSTS REQUIRED)		
	L	E
***	Greater than 48" Less than 60"	12"
	60" to 108"	L/5

SIGN SHAPE OTHER THAN DIAMOND (THREE POSTS REQUIRED)	
L	E
Greater than 108" to 144"	12"

GENERAL NOTES

1. For 3 or 4 post installations, individual post spacing shall be greater than 3'-6".
2. See tables below for required number of posts.
3. For expressways and freeways, mounting height is 7'-3" (±) or 6'-3" (±) depending upon existence of sub-sign.
4. The (±) tolerance for mounting height is 3 inches.
5. J-Assemblies are considered to be one sign for mounting height.
6. Offset distance shall be consistent with existing signs or consistent throughout length of project.
7. Folding signs shall be mounted at a height of 5'-3" (±) or as directed by the engineer.
8. The Double Arrow sign (W12-1) shall be mounted at a height of 2'-3" (±). The Chevron sign (W1-8), Roundabout Chevron panel (R6-4B), Clearance Markers (W5-52), Mile Markers (D10 series), In Road Object Markers (W5-54) & End of Road Markers (W5-56) shall be mounted at a height of 4"-3" (±).

* 6 feet from edge of a paved shoulder or 12 feet from the edge of pavement (edge line location) or 2 feet from outside edge of gravel, whichever is greater unless directed by project engineer.

** The existence of curb and gutter does not in itself mandate the vertical clearance illustrated. That height is typically measured where there is sidewalk adjacent to the roadway or parking is permitted. In the absence of sidewalk vertical clearance is measured from the top of the curb. Offset of signs is measured from the flow line.

*** See A4-3 sign plate for signs 4' or less in width and less than 20 S.F. in area.

POST EMBEDMENT DEPTH

Area of Sign Installation (Sq. Ft.)	D (Min)
20 or Less	4'
Greater than 20	5'

TYPICAL INSTALLATION OF TYPE II SIGNS ON MULTIPLE POSTS

WISCONSIN DEPT OF TRANSPORTATION

APPROVED Matthew R Rauch
For State Traffic Engineer

DATE 8/21/17 PLATE NO. A4-4.15

PROJECT NO:	HWY:	COUNTY:		SHEET NO: 264	E

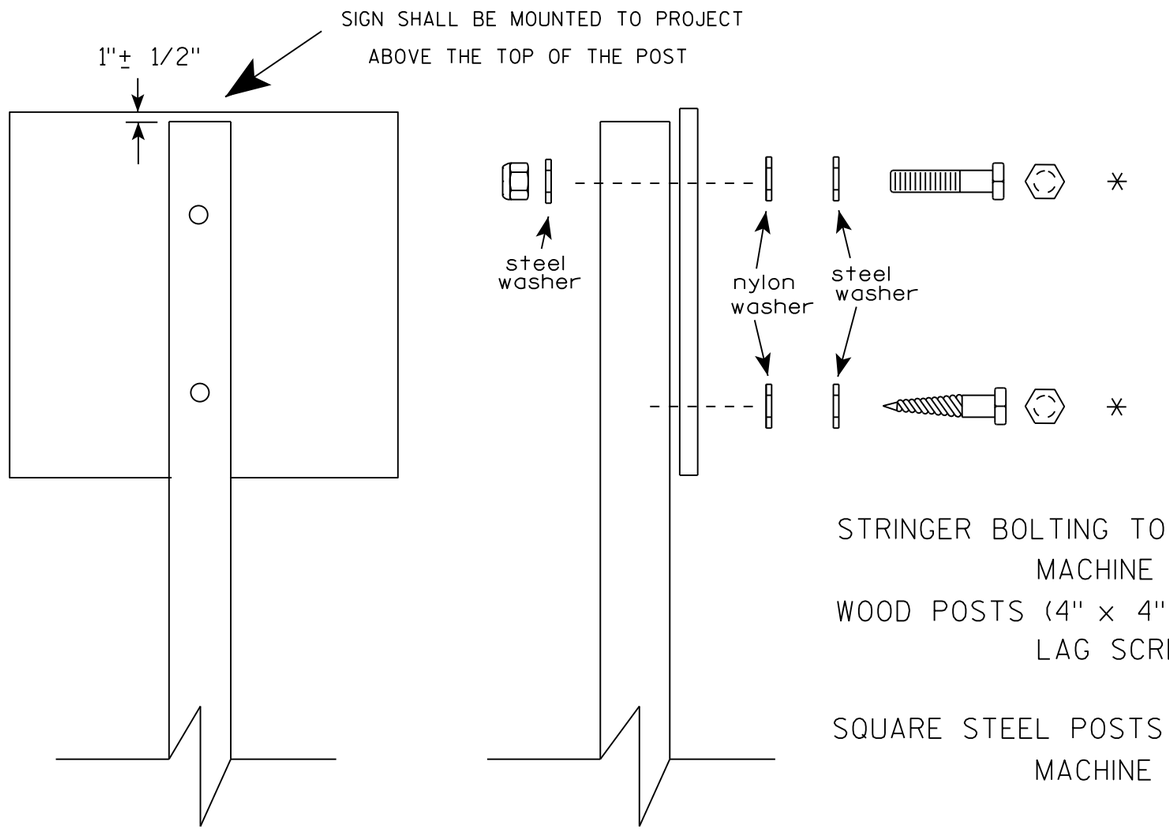

Nuts, bolts and lags used for mounting signs shall have hexagonal heads and shall be either :

a. Hot dip galvanized in accordance with ASTM Designation: A 153, Class D, or SC 3

b. Electro-galvanized in accordance with ASTM Designation : B 633, TYPE III, SC 3.

Threads on bolts and nuts shall be manufactured with sufficient allowance for the cadmium plate or galvanized coating to permit the nuts to run freely on the bolts.

STRINGER BOLTING TO ALUMINUM SIGNS (SEE SIGN PLATE A4-18)

MACHINE BOLTS - 5/16" X 1-3/4" Length w/ lock nuts

WOOD POSTS (4" x 4" or 4" x 6")

LAG SCREWS - 3/8" X 3" (NO STRINGERS ON BACK OF SIGN)
3/8" X 4" (STRINGERS ON BACK OF SIGN)

SQUARE STEEL POSTS (2" x 2")

MACHINE BOLTS - 3/8" X 3-1/4" Length w/ nuts (NO STRINGER ON BACK OF SIGN)
3/8" X 5" Length w/ nuts (STRINGERS ON BACK OF SIGN)

RIVETS - 9/32" (6605-9-6) BULB-TITE, TRI-FOLD, ALUMINUM BODY/MANDREL
O.D. FLANGE .720-.765 INCH, GRIP RANGE .042-.375 INCH

WASHERS (ALL POSTS) -

1-1/4" O.D. X 3/8" I.D. X 1/16" STEEL
1-1/4" O.D. X 3/8" I.D. X .080 NYLON

* Two different fastening systems are shown for illustration purposes. On any individual sign, either one or the other system shall be used. Actual number of fasteners per sign varies with the sign area, but normally there are two. For a single post installation, all signs greater than 9 sq. ft. require the use of 3 fasteners.

ATTACHMENT OF SIGNS TO POSTS

WISCONSIN DEPT OF TRANSPORTATION

APPROVED Matthew R Rauch
for State Traffic Engineer

DATE 8/11/16 PLATE NO. A4-8.8

265

7

PROJECT NO: SHEET NO: E

FILE NAME : C:\CAEfiles\Projects\tr_stdplate\A48.DGN PLOT DATE : 11-AUG-2016 11:35 PLOT BY : $$ plotuser $$

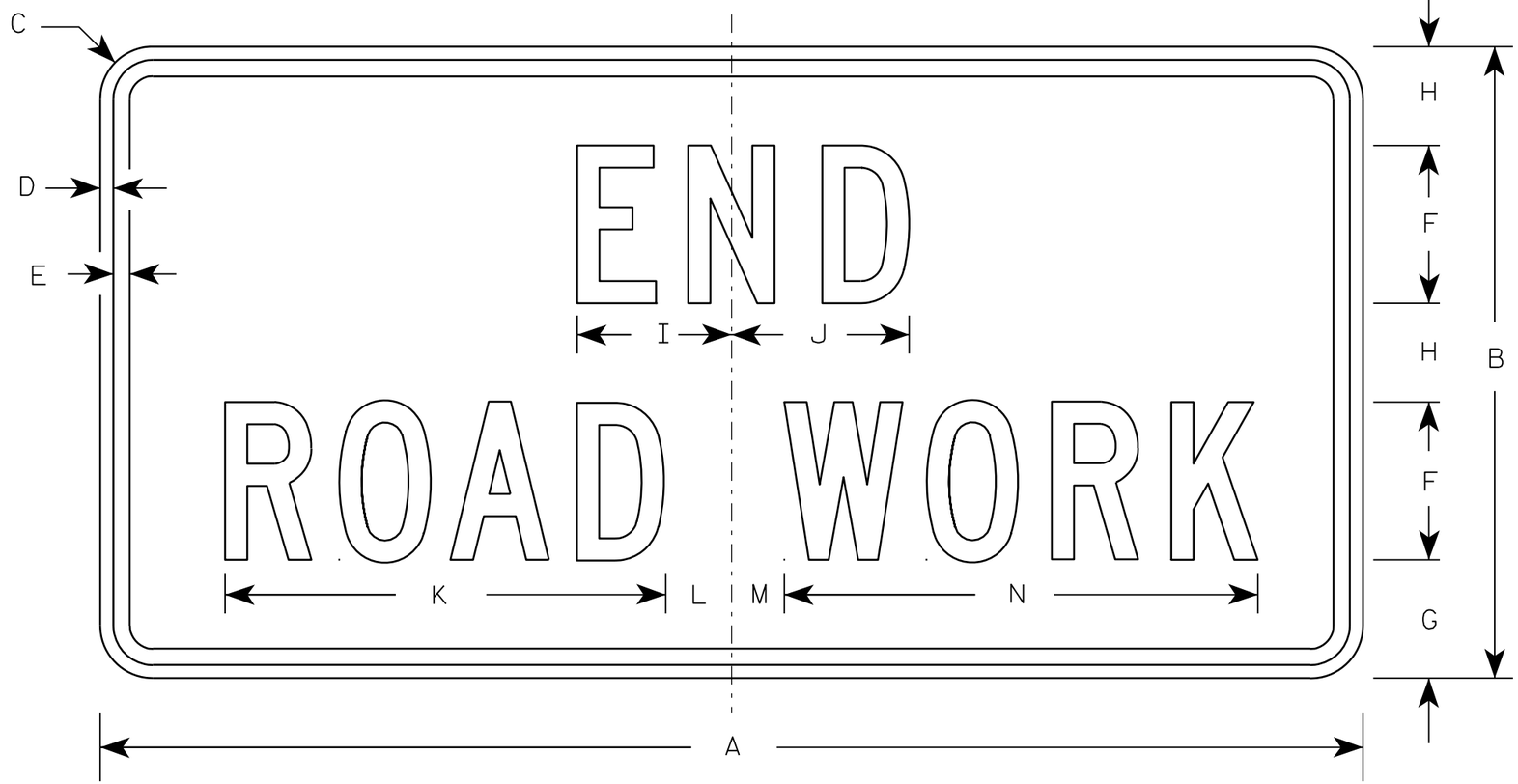

G20-2A

NOTES

1. Sign is Type II - Type F Reflective - reference WIS DOT Standard Specification for HIGHWAY and STRUCTURE CONSTRUCTION latest edition.
2. Color:
   Background - Orange
   Message - Black
3. Message Series - C
4. Corners may be square or rounded when base material is plywood but borders shall be rounded as shown. When base material is metal, the corners and borders shall be rounded.

Metric equivalent for this sign is:

SIZE	
1	900 mm X 450 mm
2	1200 mm X 600 mm
3	1200 mm X 600 mm
4	1200 mm X 600 mm
5	1200 mm X 600 mm

SIZE	A	B	C	D	E	F	G	H	I	J	K	L	M	N	O	P	Q	R	S	T	U	V	W	X	Y	Z	Area sq. ft.	Area m2
1	36	18	1 1/8	3/8	1/2	4	3 3/4	2 1/2	4 1/8	4 1/8	11 1/8	2	1	12 1/8													4.5	0.41
2	48	24	1 1/2	1/2	5/8	6	4 1/2	3 3/4	5 7/8	6 3/4	16 3/4	2 1/2	1 3/4	18 1/2													8.0	0.72
3	48	24	1 1/2	1/2	5/8	6	4 1/2	3 3/4	5 7/8	6 3/4	16 3/4	2 1/2	1 3/4	18 1/2													8.0	0.72
4	48	24	1 1/2	1/2	5/8	6	4 1/2	3 3/4	5 7/8	6 3/4	16 3/4	2 1/2	1 3/4	18 1/2													8.0	0.72
5	48	24	1 1/2	1/2	5/8	6	4 1/2	3 3/4	5 7/8	6 3/4	16 3/4	2 1/2	1 3/4	18 1/2													8.0	0.72

STANDARD SIGN
G20-2A

WISCONSIN DEPT OF TRANSPORTATION

APPROVED Matthew R Rauch
for State Traffic Engineer

DATE 9/30/09 PLATE NO. G20-2A.8

PROJECT NO:	HWY:	COUNTY:		SHEET NO: 266	E

FILE NAME : C:\Users\PROJECTS\tr_stdplate\G202A.DGN PLOT DATE : 30-SEP-2009 09:31 PLOT BY : ditjph PLOT NAME : PLOT SCALE : 5.561773:1.000000

7

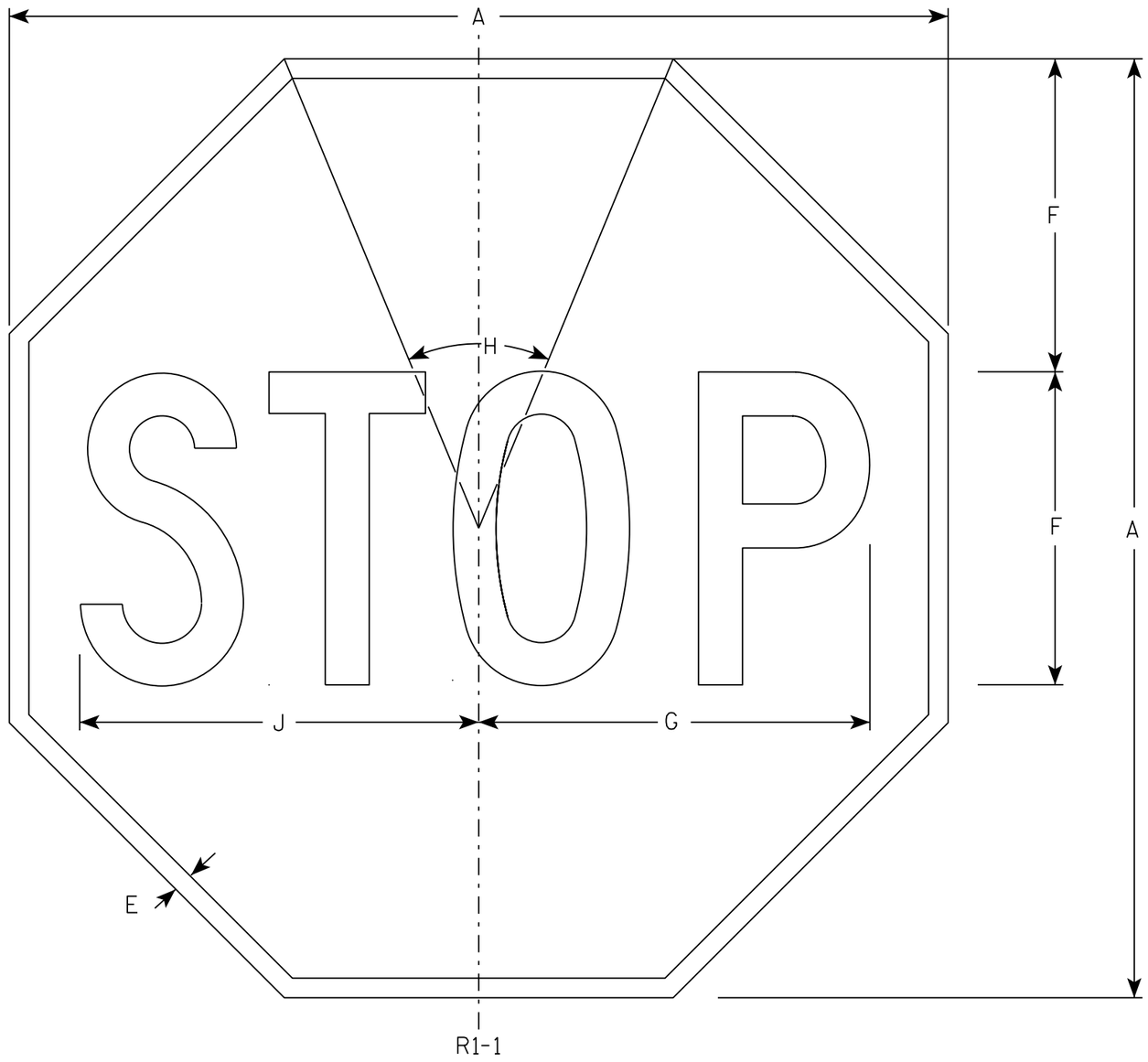

NOTES

1. Sign is Type II - Type H Reflective - reference WIS DOT Standard Specification for HIGHWAY and STRUCTURE CONSTRUCTION latest edition.
2. Color:
   Background - Red
   Message - White
3. Message Series - C

SIZE	A	B	C	D	E	F	G	H	I	J	K	L	M	N	O	P	Q	R	S	T	U	V	W	X	Y	Z	Area sq. ft.
1	30				5/8	10	12 1/2	45°		12 3/4																	5.18
2S	30				5/8	10	12 1/2	45°		12 3/4																	5.18
2M	36				3/4	12	15	45°		15 3/8																	7.46
3	36				3/4	12	15	45°		15 3/8																	7.46
4	48				1	16	20	45°		20 1/2																	13.25
5	48				1	16	20	45°		20 1/2																	13.25
6	18				3/8	6	7 3/4	45°		7 3/4																	1.86
7	12				1/4	4	5	45°		5 1/8																	0.78

STANDARD SIGN
R1-1

WISCONSIN DEPT OF TRANSPORTATION

APPROVED Matthew R Rauch
for State Traffic Engineer

DATE 11/12/15 PLATE NO. R1-1.13

PROJECT NO:	HWY:	COUNTY:		SHEET NO: 267	E

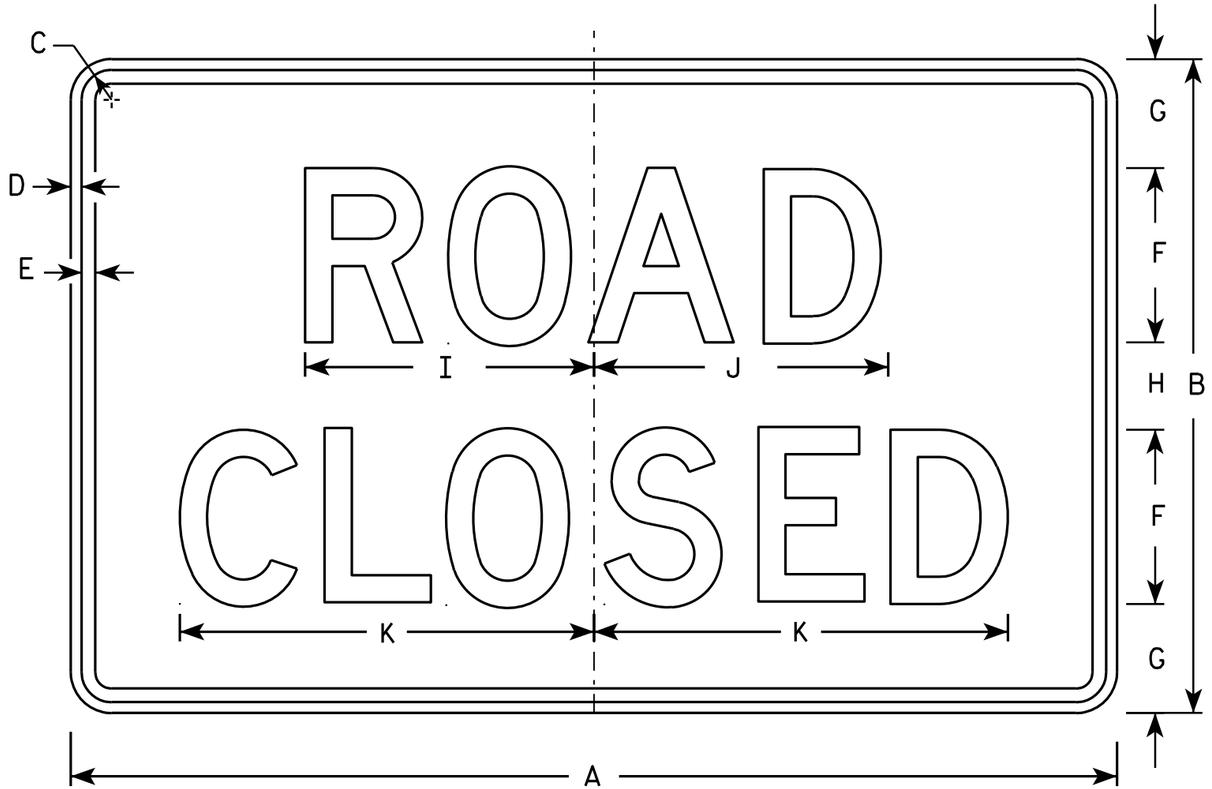

R11-2

NOTES

1. Sign is Type II - Type H Reflective - reference WIS DOT Standard Specification for HIGHWAY and STRUCTURE CONSTRUCTION latest edition.
2. Color:
   Background - White
   Message - Black
3. Message Series - D
4. Corners may be square or rounded when base material is plywood but borders shall be rounded as shown. When base material is metal, the corners and borders shall be rounded.
5. Modify the message as required.

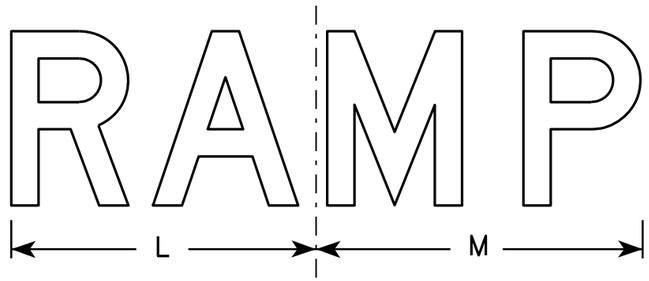

R11-2R

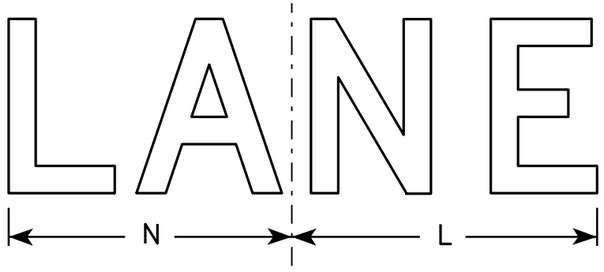

R11-2L

SIZE	A	B	C	D	E	F	G	H	I	J	K	L	M	N	O	P	Q	R	S	T	U	V	W	X	Y	Z	Area sq. ft.
1																											
2S	48	30	1 3/8	1/2	5/8	8	5	4	13 1/4	13 1/2	19	14	15	13													10.0
2M	48	30	1 3/8	1/2	5/8	8	5	4	13 1/4	13 1/2	19	14	15	13													10.0
3	48	30	1 3/8	1/2	5/8	8	5	4	13 1/4	13 1/2	19	14	15	13													10.0
4	48	30	1 3/8	1/2	5/8	8	5	4	13 1/4	13 1/2	19	14	15	13													10.0
5	48	30	1 3/8	1/2	5/8	8	5	4	13 1/4	13 1/2	19	14	15	13													10.0

STANDARD SIGN
R11-2

WISCONSIN DEPT OF TRANSPORTATION

APPROVED Matthew R Rauch
for State Traffic Engineer

DATE 4/1/11 PLATE NO. R11-2.10

PROJECT NO: | HWY: | COUNTY: | SHEET NO: 268 | E

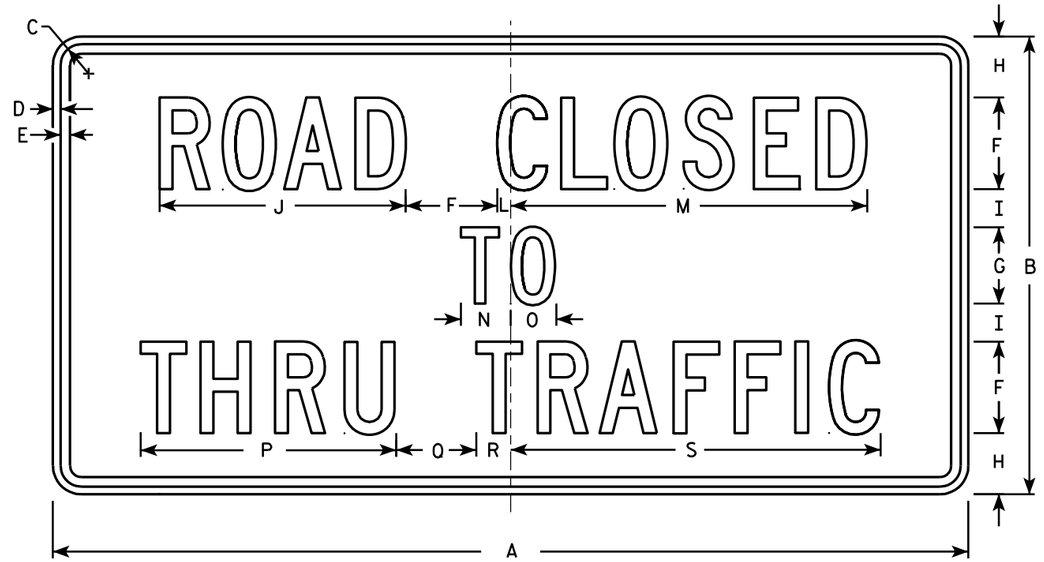

R11-4

NOTES

1. Sign is Type II - Type H Reflective - reference WIS DOT Standard Specification for HIGHWAY and STRUCTURE CONSTRUCTION latest edition.
2. Color:
   Background - White
   Message - Black
3. Message Series - C
4. Corners may be square or rounded when base material is plywood but borders shall be rounded as shown. When base material is metal, the corners and borders shall be rounded.

SIZE	A	B	C	D	E	F	G	H	I	J	K	L	M	N	O	P	Q	R	S	T	U	V	W	X	Y	Z	Area sq. ft.
1																											
2S	60	30	1 3/8	1/2	5/8	6	5	4	2 1/2	16 1/8		7/8	23 3/8	3 1/4	3	16 3/4	5 1/4	2 1/4	24 1/4								12.5
2M	60	30	1 3/8	1/2	5/8	6	5	4	2 1/2	16 1/8		7/8	23 3/8	3 1/4	3	16 3/4	5 1/4	2 1/4	24 1/4								12.5
3																											
4																											
5																											

STANDARD SIGN
R11 - 4

WISCONSIN DEPT OF TRANSPORTATION

APPROVED Matthew R Rauch for State Traffic Engineer

DATE 4/1/11 PLATE NO. R11-4.3

PROJECT NO: | HWY: | COUNTY: | SHEET NO: 269 | E

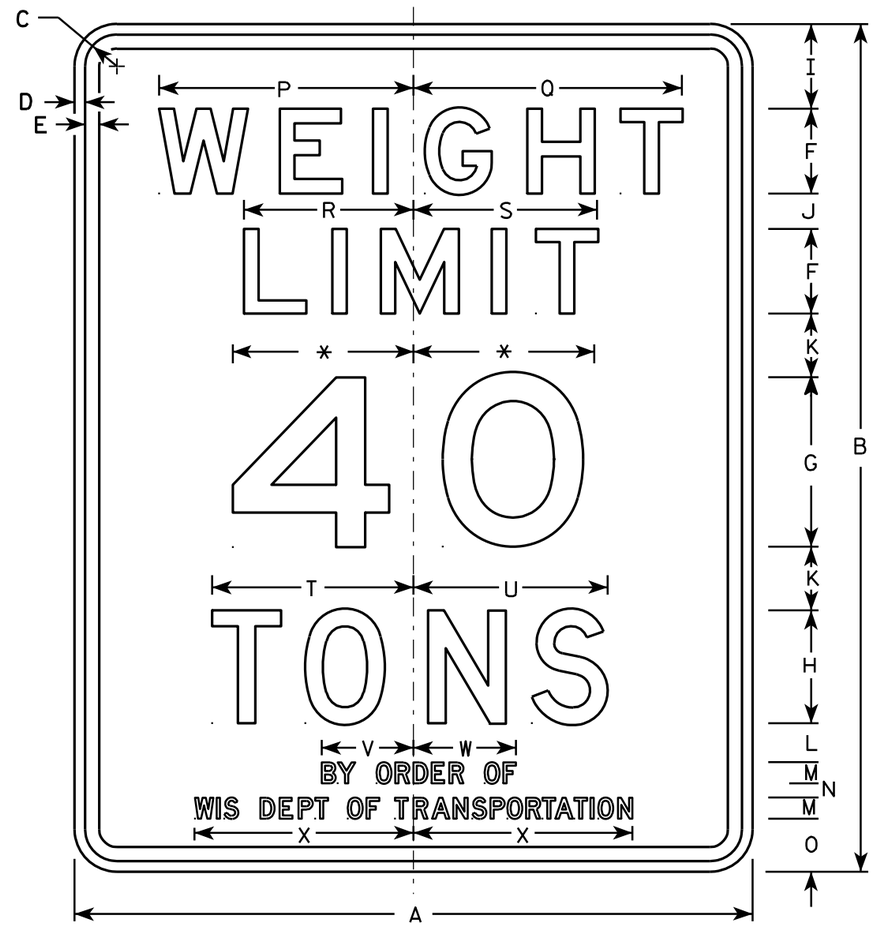

R12-1

NOTES

1. Sign is Type II - Type H Reflective - reference WIS DOT Standard Specification for HIGHWAY and STRUCTURE CONSTRUCTION latest edition.
2. Color:
   Background - White
   Message - Black
3. Message Series - See note 5
4. Corners may be square or rounded when base material is plywood but borders shall be rounded as shown. When base material is metal, the corners and borders shall be rounded.
5. Lines 1, 2 & 3 are series E
   Lines 4, 5, & 6 are series D.
6. Substitute appropriate numeral and optically adjust spacing to achieve proper balance.
7. Substitute name of county or town on County Trunk and Town Highways respectively. Community name on City or Village Streets including Connecting Highways is optional.

* Varies (see note 6)

SIZE	A	B	C	D	E	F	G	H	I	J	K	L	M	N	O	P	Q	R	S	T	U	V	W	X	Y	Z	Area sq. ft.
1	24	30	1 1/8	3/8	1/2	3	6	4	3	1 1/4	2 1/4	1 3/8	3/4	1/2	1 7/8	9	9 1/2	6	6 1/2	7 1/8	6 7/8	3 1/4	3 5/8	7 3/4			5.0
2S	24	30	1 1/8	3/8	1/2	3	6	4	3	1 1/4	2 1/4	1 3/8	3/4	1/2	1 7/8	9	9 1/2	6	6 1/2	7 1/8	6 7/8	3 1/4	3 5/8	7 3/4			5.0
2M	24	30	1 1/8	3/8	1/2	3	6	4	3	1 1/4	2 1/4	1 3/8	3/4	1/2	1 7/8	9	9 1/2	6	6 1/2	7 1/8	6 7/8	3 1/4	3 5/8	7 3/4			5.0
3	36	48	1 3/8	1/2	5/8	6	10	8	4 1/2	2 1/2	2 1/4	1 1/2	3/4	1/2	3	13 1/2	14 1/4	9	9 3/4	10 5/8	10 1/4	3 1/4	3 5/8	7 3/4			12.0
4	48	60	2 1/4	3/4	1	6	12	8	6	2 1/2	4 1/2	2 3/4	1 1/2	1	3 3/4	18	19	12	13	14 1/4	13 3/4	6 1/2	7 1/4	15 1/2			20.0
5																											

STANDARD SIGN
R12-1

WISCONSIN DEPT OF TRANSPORTATION

APPROVED Matthew R Rauch
for State Traffic Engineer

DATE 4/1/11 PLATE NO. R12-1.8

PROJECT NO: | HWY: | COUNTY: | SHEET NO: 270 | E

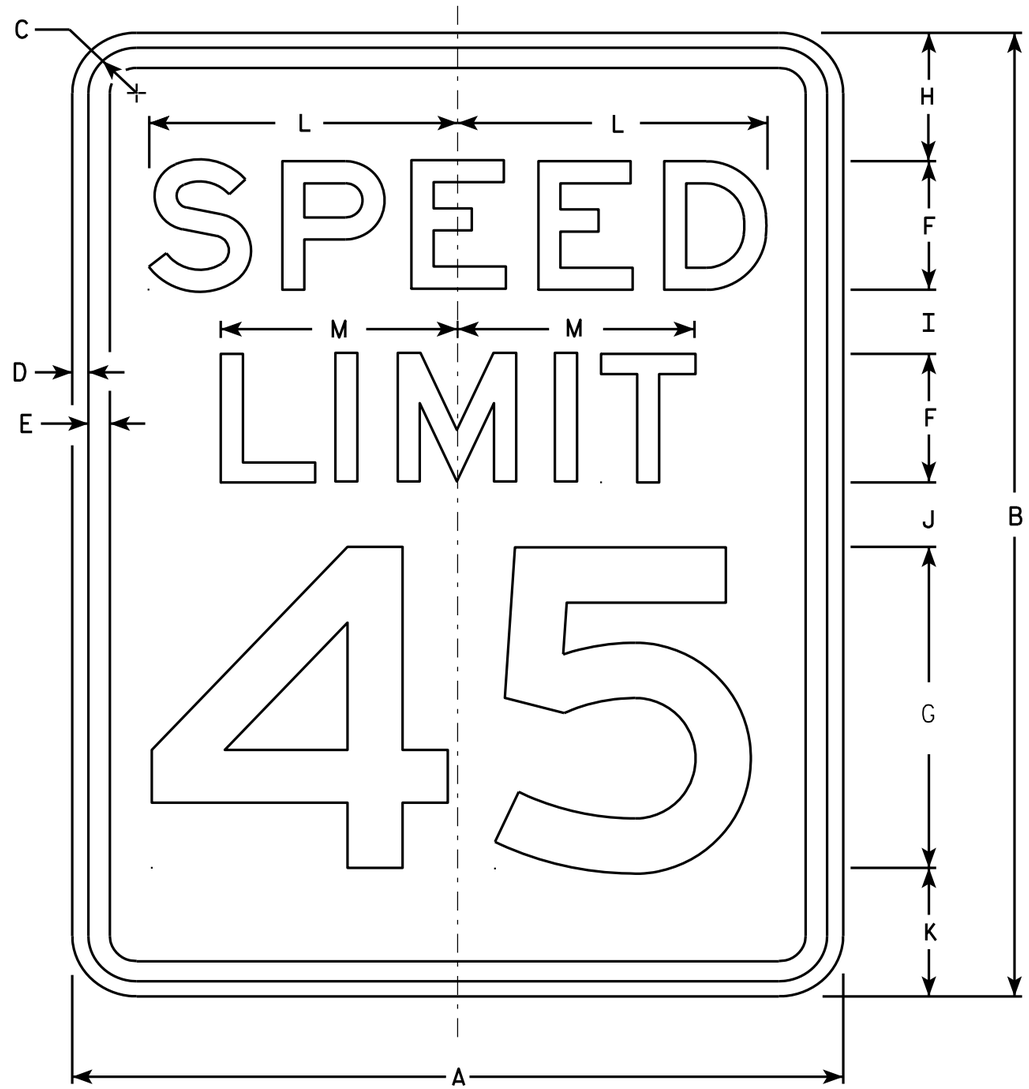

R2-1

NOTES

1. Sign is Type II - Type H Reflective - reference WIS DOT Standard Specification for HIGHWAY and STRUCTURE CONSTRUCTION latest edition.
2. Color:
   Background - White
   Message - Black
3. Message Series - E
4. Corners may be square or rounded when base material is plywood but borders shall be rounded as shown. When base material is metal, the corners and borders shall be rounded.
5. Substitute appropriate numerals and optically adjust spacing to achieve proper balance.

SIZE	A	B	C	D	E	F	G	H	I	J	K	L	M	N	O	P	Q	R	S	T	U	V	W	X	Y	Z	Area sq. ft.
1	18	24	1 1/8	3/8	1/2	3	8	3	2	2	3	7 1/4	5 1/2														3.0
2S	24	30	1 1/8	3/8	1/2	4	10	3	2 1/4	3 3/8	3 3/8	9 5/8	7 3/8														5.0
2M	30	36	1 3/8	1/2	5/8	5	12	5	2 1/2	2 1/2	4	12	9 1/4														7.5
3	36	48	1 3/8	1/2	5/8	6	14	6	5	5	6	14 3/8	11														12.0
4	36	48	1 3/8	1/2	5/8	6	14	6	5	5	6	14 3/8	11														12.0
5	48	60	2 1/4	3/4	1	8	20	6	4 1/2	6 3/4	6 3/4	19 1/4	14 5/8														20.0

STANDARD SIGN
R2-1

WISCONSIN DEPT OF TRANSPORTATION

APPROVED Matthew R Rauch
for State Traffic Engineer

DATE 5/26/10 PLATE NO. R2-1.13

PROJECT NO:	HWY:	COUNTY:		SHEET NO: 271	E

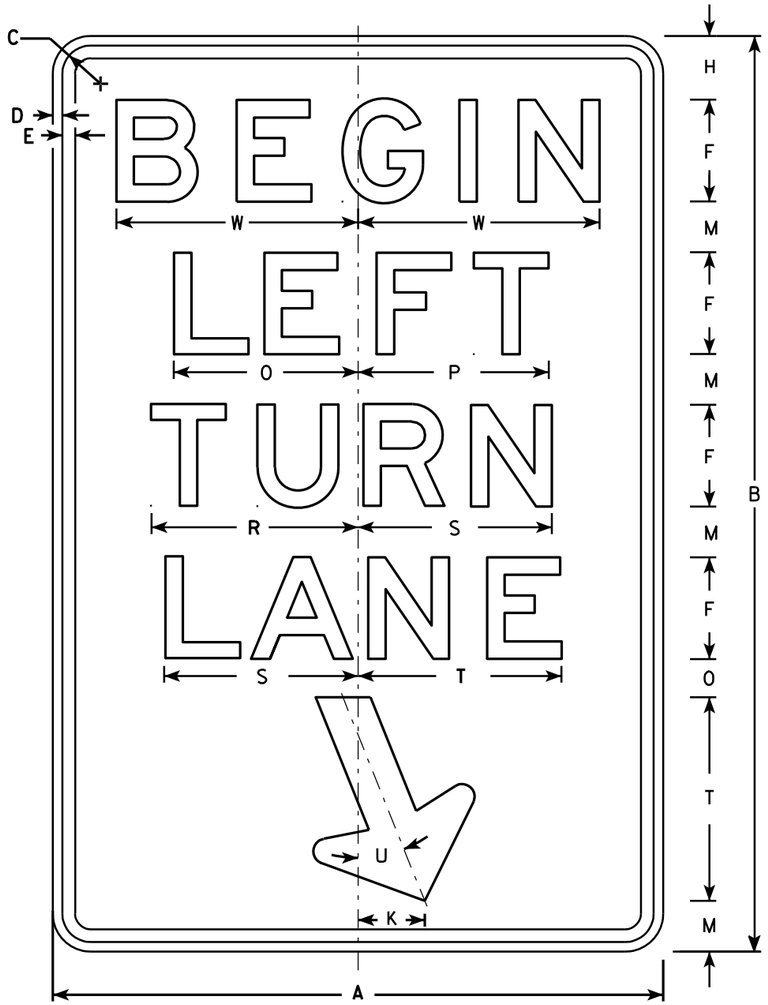

R3-20L

NOTES

1. Sign is Type II - Type H Reflective - reference WIS DOT Standard Specification for HIGHWAY and STRUCTURE CONSTRUCTION latest edition.
2. Color:
   Background - White
   Message - Black
3. Message Series - E
4. Corners may be square or rounded when base material is plywood but borders shall be rounded as shown. When base material is metal, the corners and borders shall be rounded.

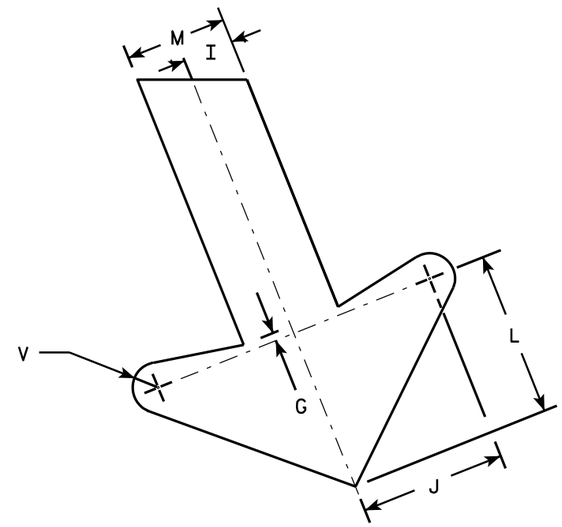

ARROW DETAIL

SIZE	A	B	C	D	E	F	G	H	I	J	K	L	M	N	O	P	Q	R	S	T	U	V	W	X	Y	Z	Area sq. ft.
1																											
2S	24	36	1 1/8	3/8	1/2	4	1/4	2 1/2	1	2 7/8	2 5/8	3 1/4	2	1 1/2	7 1/4	7 1/2		8 1/8	7 5/8	8	22°	1/2	9 1/2				6.0
2M	24	36	1 1/8	3/8	1/2	4	1/4	2 1/2	1	2 7/8	2 5/8	3 1/4	2	1 1/2	7 1/4	7 1/2		8 1/8	7 5/8	8	22°	1/2	9 1/2				6.0
3	36	54	1 3/4	1/2	5/8	6	3/8	3 3/4	1 1/2	4 1/4	4	4 7/8	3	2 1/4	10 7/8	11 1/4		12 1/4	11 1/2	12	22°	3/4	13 1/4				13.5
4																											
5																											

STANDARD SIGN
R3-20L

WISCONSIN DEPT OF TRANSPORTATION

APPROVED Matthew R Rauch
for State Traffic Engineer

DATE 10/18/10 PLATE NO. R3-20L.7

PROJECT NO: | HWY: | COUNTY: | SHEET NO: 272 | E

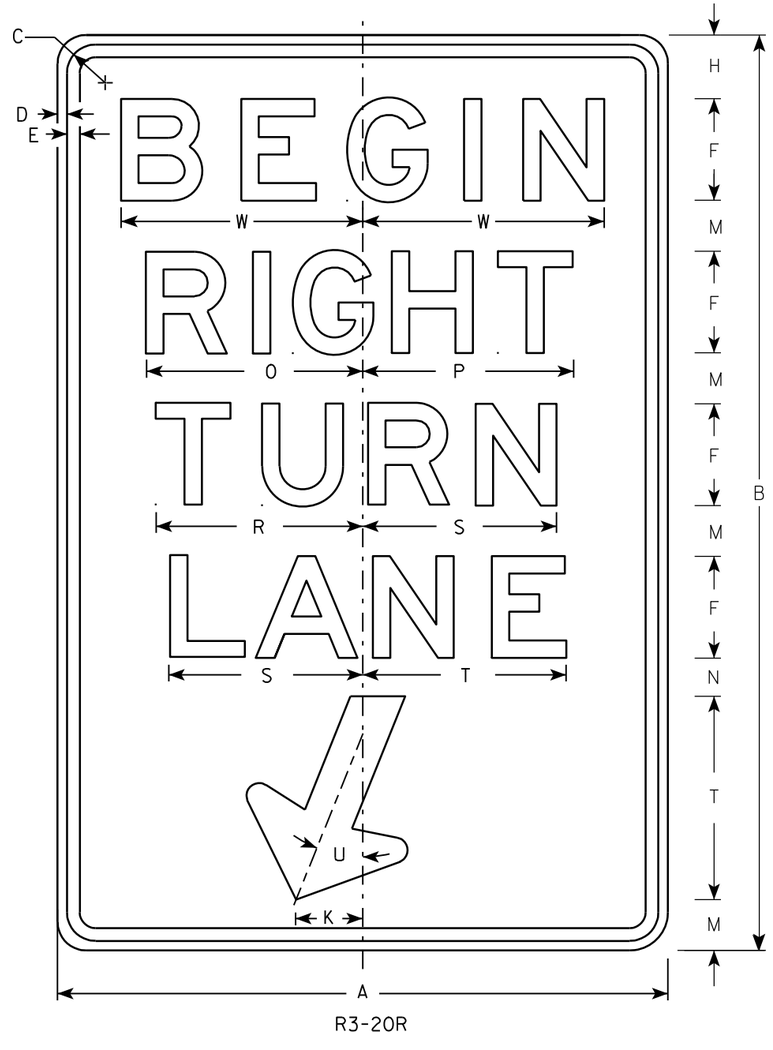

R3-20R

NOTES

1. Sign is Type II - Type H Reflective - reference WIS DOT Standard Specification for HIGHWAY and STRUCTURE CONSTRUCTION latest edition.
2. Color:
   Background - White
   Message - Black
3. Message Series - E
4. Corners may be square or rounded when base material is plywood but borders shall be rounded as shown. When base material is metal, the corners and borders shall be rounded.

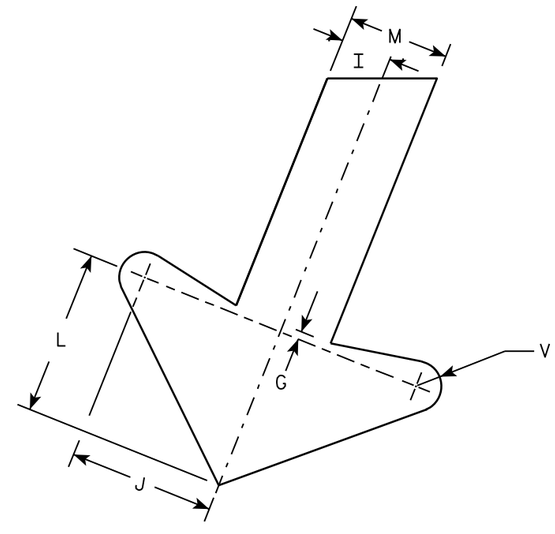

ARROW DETAIL

SIZE	A	B	C	D	E	F	G	H	I	J	K	L	M	N	O	P	Q	R	S	T	U	V	W	X	Y	Z	Area sq. ft.
1																											
2S	24	36	1 1/8	3/8	1/2	4	1/4	2 1/2	1	2 7/8	2 5/8	3 1/4	2	1 1/2	8 1/2	8 1/4		8 1/8	7 5/8	8	22°	1/2	9 1/2				6.0
2M	24	36	1 1/8	3/8	1/2	4	1/4	2 1/2	1	2 7/8	2 5/8	3 1/4	2	1 1/2	8 1/2	8 1/4		8 1/8	7 5/8	8	22°	1/2	9 1/2				6.0
3	36	54	1 3/4	1/2	5/8	6	3/8	3 3/4	1 1/2	4 1/4	4	4 7/8	3	2 1/4	12 3/4	12 1/2		12 1/4	11 1/2	12	22°	3/4	13 1/4				13.5
4																											
5																											

STANDARD SIGN
R3-20R

WISCONSIN DEPT OF TRANSPORTATION

APPROVED Matthew R Rauch
for State Traffic Engineer

DATE 10/18/10 PLATE NO. R3-20R.6

PROJECT NO: | HWY: | COUNTY: | SHEET NO: 273 | E

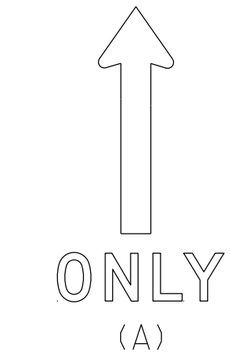

(A)

(B)

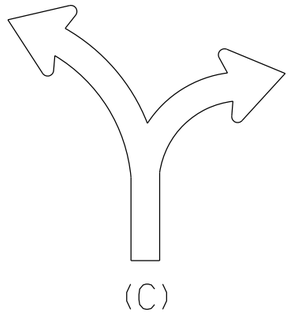
(C)

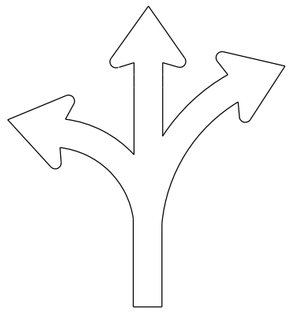
(D)

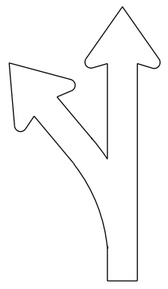
(E)

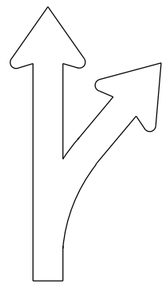
(F)

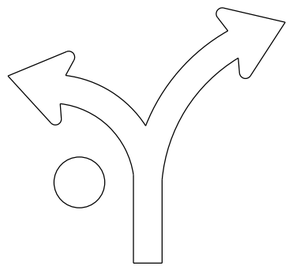
(G)

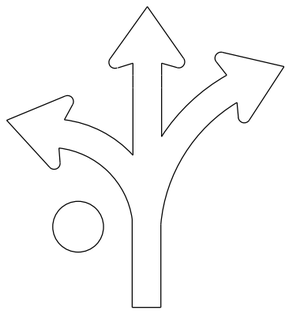
(H)

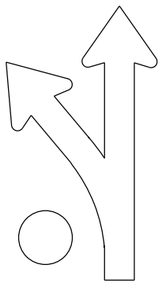
(I)

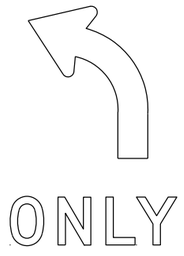

(L)

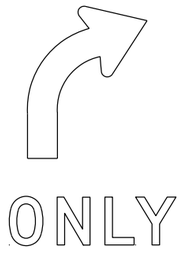

(R)

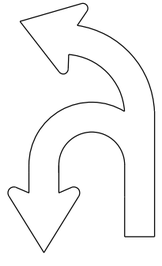
(U)

NOTES

1. Sigs are Type II - Type H Reflective
2. Color:
   Background - White
   Message - Black
3. Message Series - D
4. Use appropriate Letter for Sign Code
   Each letter added makes sign wider. Example R3-8EAR
5. Square footage of sign varies by letters

1	Letter =	3.75 sq ft for Size 2
		6.0 sq ft for Size 3
		10.0 sq ft for Size 4 or 5
2	Letters =	7.5 sq ft for Size 2
		12.0 sq ft for Size 3
		20.0 sq ft for Size 4 or 5
3	Letters =	11.25 sq ft for Size 2
		18.0 sq ft for Size 3
		30.0 sq ft for Size 4 or 5
4	Letters =	15.0 sq ft for Size 2
		24.0 sq ft for Size 3
		40.0 sq ft for Size 4 or 5
5	Letters =	18.75 sq ft for Size 2
		30.0 sq ft for Size 3
		50.0 sq ft for Size 4 or 5
6	Letters =	22.5 sq ft for Size 2
		36.0 sq ft for Size 3
		60.0 sq ft for Size 4 or 5

6. When letters C,D,G,H are used on the Left or Right end of the sign the Sq. Ft. changes.
   Add the amounts when these letters are used:
   1.25 sq ft for Size 2
   1.5 sq ft for Size 3
   2.0 sq ft for Size 4 or 5

STANDARD SIGN
R3-8 Series

WISCONSIN DEPT OF TRANSPORTATION

APPROVED Matthew R Rauch
For State Traffic Engineer

DATE 5/21/19 PLATE NO. R3-8.1

7

PROJECT NO:

SHEET NO: 274 E

FILE NAME : C:\CAEfiles\Projects\stdplate_R38.dgn PLOT DATE : 21-MAY 2019 4:37 PLOT BY : mscj9h PLOT NAME :

NOTES

1. Sign is Type II - Type H Reflective
2. Color:
   Background - White
   Message - Black
3. Message Series - D

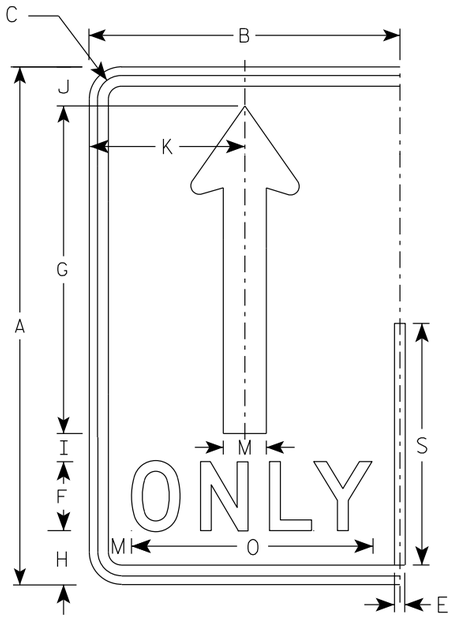

(A)

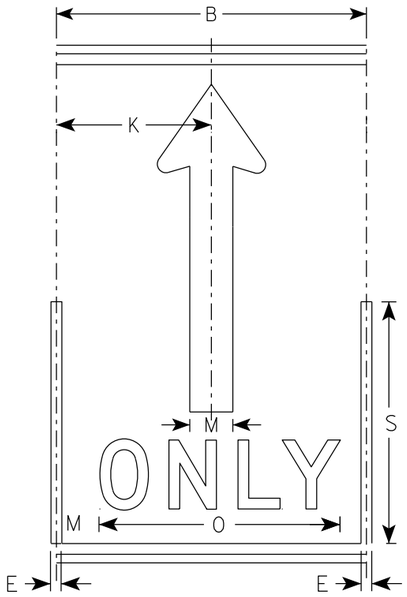

(A)

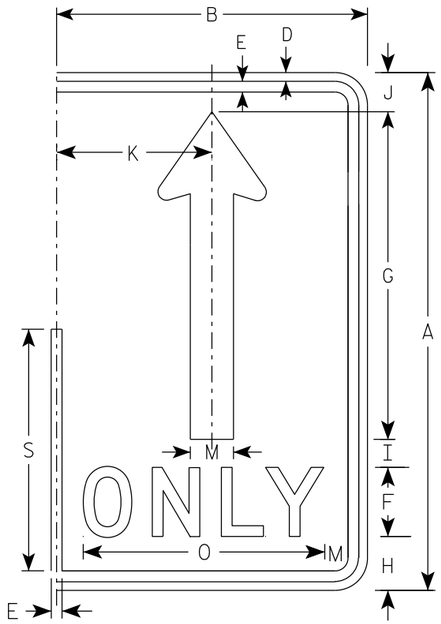

(A)

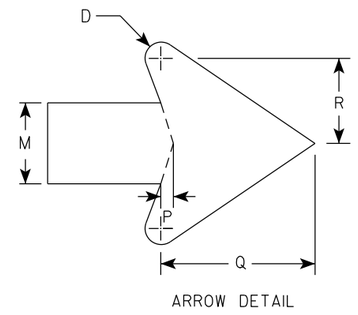

ARROW DETAIL

SIZE	A	B	C	D	E	F	G	H	I	J	K	L	M	N	O	P	Q	R	S	T	U	V	W	X	Y	Z	Area sq. ft.
1																											
2S	30	18	1 3/8	1/2	5/8	4	19	3 1/8	1 5/8	2 1/4	9		2 1/2		14	3/8	4 3/4	2 5/8	14								3.75
2M	30	18	1 3/8	1/2	5/8	4	19	3 1/8	1 5/8	2 1/4	9		2 1/2		14	3/8	4 3/4	2 5/8	14								3.75
3	36	24	1 3/8	1/2	5/8	5	22 3/4	3 3/4	1 3/4	2 3/4	12		3		17 5/8	1/2	5 3/4	3 1/8	16 3/4								6.0
4	48	30	2 1/4	3/4	1	6	30 3/8	5 1/8	2 7/8	3 5/8	15		4		21 3/4	5/8	7 5/8	4 1/4	22 3/8								10.0
5	48	30	2 1/4	3/4	1	6	30 3/8	5 1/8	2 7/8	3 5/8	15		4		21 3/4	5/8	7 5/8	4 1/4	22 3/8								10.0

STANDARD SIGN
R3-8 (A) Arrow

WISCONSIN DEPT OF TRANSPORTATION

APPROVED Matthew R Rauch
for State Traffic Engineer

DATE 5/21/19 PLATE NO. R3-8.1

PROJECT NO: | HWY: | COUNTY: | SHEET NO: 275 | E

NOTES

1. Sign is Type II - Type H Reflective
2. Color:
   Background - White
   Message - Black
   Message Series - D

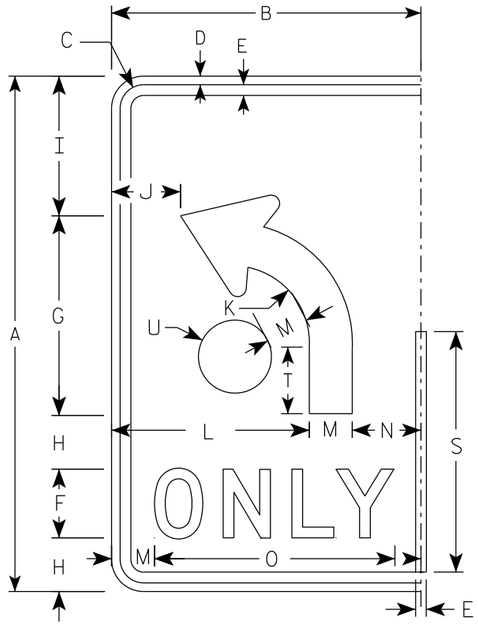

(B)

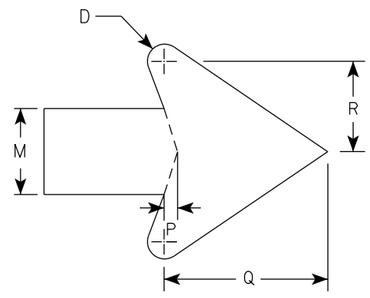

ARROW DETAIL

SIZE	A	B	C	D	E	F	G	H	I	J	K	L	M	N	O	P	Q	R	S	T	U	V	W	X	Y	Z	Area sq. ft.
1																											
2S	30	18	1 3/8	1/2	5/8	4	11 5/8	3 1/8	8 1/8	4	4 1/2	11 1/2	2 1/2	4	14	3/8	4 3/4	2 5/8	14	3 7/8	2 1/8						3.75
2M	30	18	1 3/8	1/2	5/8	4	11 5/8	3 1/8	8 1/8	4	4 1/2	11 1/2	2 1/2	4	14	3/8	4 3/4	2 5/8	14	3 7/8	2 1/8						3.75
3	36	24	1 3/8	1/2	5/8	5	14	3 1/2	9 3/4	6	5 3/8	15	3	6	17 5/8	1/2	5 3/4	3 1/8	16 3/4	4 5/8	2 1/2						6.0
4	48	30	2 1/4	3/4	1	6	18 5/8	5 1/8	13 1/8	6 1/8	7 1/4	18	4	8	21 3/4	5/8	7 5/8	4 1/4	22 3/8	6 1/4	3 3/8						10.0
5	48	30	2 1/4	3/4	1	6	18 5/8	5 1/8	13 1/8	6 1/8	7 1/4	18	4	8	21 3/4	5/8	7 5/8	4 1/4	22 3/8	6 1/4	3 3/8						10.0

STANDARD SIGN

R3-8 (B) Arrow

WISCONSIN DEPT OF TRANSPORTATION

APPROVED Matthew R Rauch

for State Traffic Engineer

DATE 5/21/19 PLATE NO. R3-8.1

PROJECT NO:

SHEET NO: 276 **E**

NOTES

1. Sign is Type II - Type H Reflective
2. Color:
   Background - White
   Message - Black
3. Message Series - None

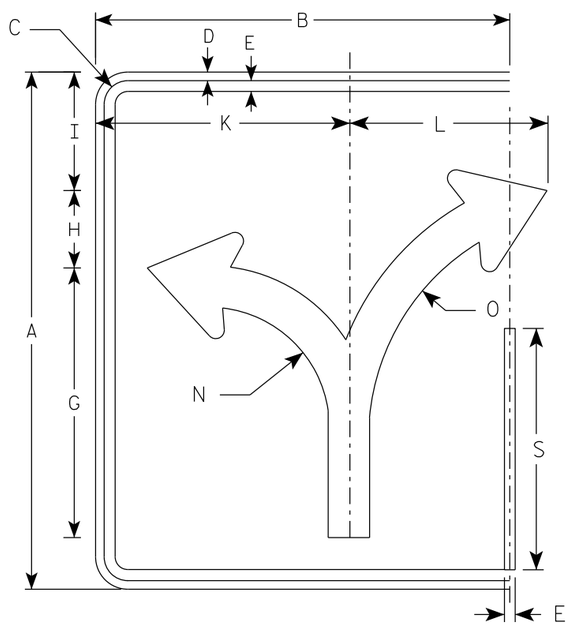

(C)

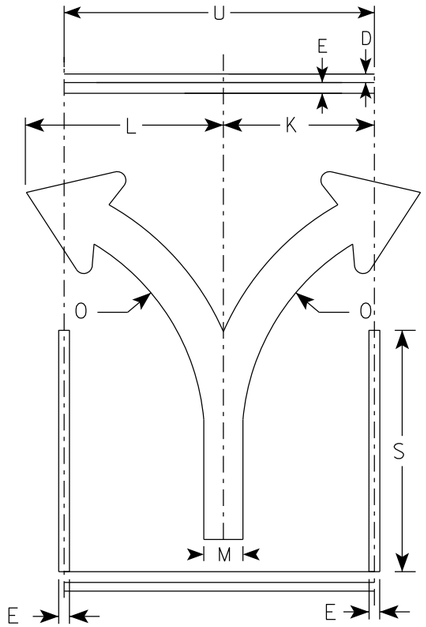

(C)

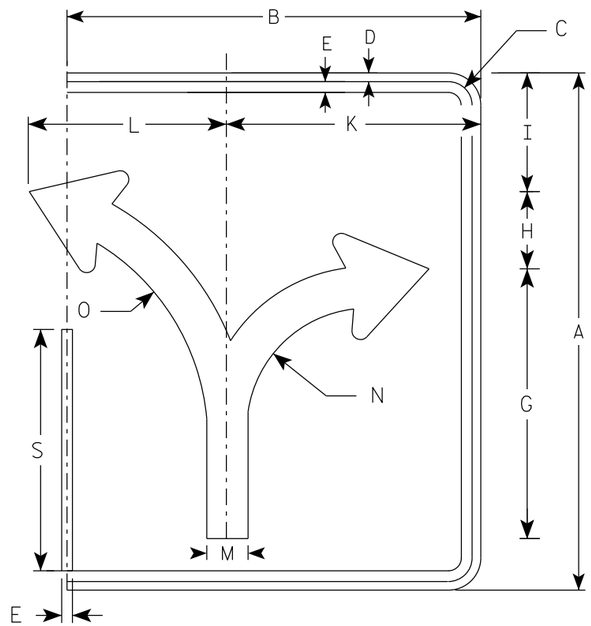

(C)

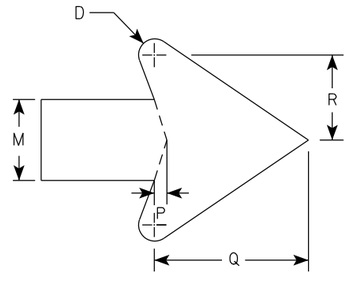

ARROW DETAIL

SIZE	A	B	C	D	E	F	G	H	I	J	K	L	M	N	O	P	Q	R	S	T	U	V	W	X	Y	Z	ENDS Area sq. ft.	MIDDLE Area sq. ft.
1																												
2S	30	24	1 3/8	1/2	5/8		15 5/8	4 1/2	6 7/8		14 3/4	11 1/2	2 3/8	7	13 1/4	3/8	4 1/2	2 1/2	14		18						5.0	3.75
2M	30	24	1 3/8	1/2	5/8		15 5/8	4 1/2	6 7/8		14 3/4	11 1/2	2 3/8	7	13 1/4	3/8	4 1/2	2 1/2	14		18						5.0	3.75
3	36	30	1 3/8	1/2	5/8		18 3/4	5 1/2	8 1/4		17 1/4	17 1/4	2 7/8	8 3/8	16	1/2	5 1/2	3	16 3/4		24						7.5	6.0
4	48	36	2 1/4	3/4	1		24 7/8	7 1/4	11		23 1/8	18	3 3/4	11 1/8	21 1/4	5/8	7 1/8	4	22 3/8		30						12.0	10.0
5	48	36	2 1/4	3/4	1		24 7/8	7 1/4	11		23 1/8	18	3 3/4	11 1/8	21 1/4	5/8	7 1/8	4	22 3/8		30						12.0	10.0

STANDARD SIGN
R3-8 (C) Arrow

WISCONSIN DEPT OF TRANSPORTATION

APPROVED Matthew R Rauch
for State Traffic Engineer

DATE 5/21/19 PLATE NO. R3-8.1

PROJECT NO: | HWY: | COUNTY: | SHEET NO: 277 | E

NOTES

1. Sign is Type II - Type H Reflective
2. Color:
   Background - White
   Message - Black
3. Message Series - None

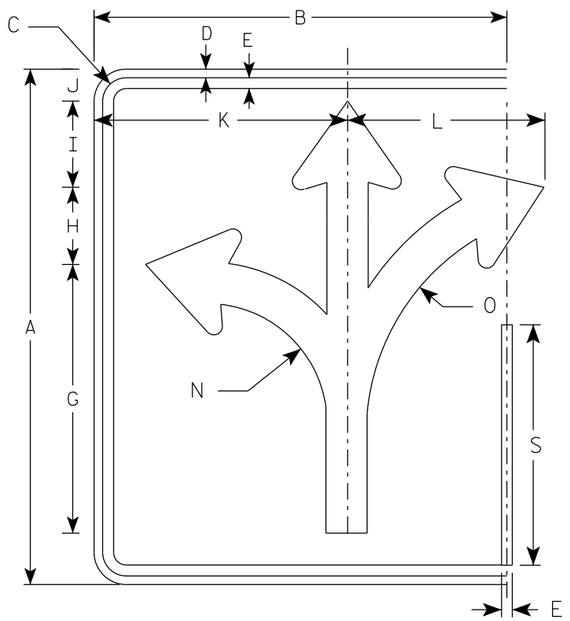

(D)

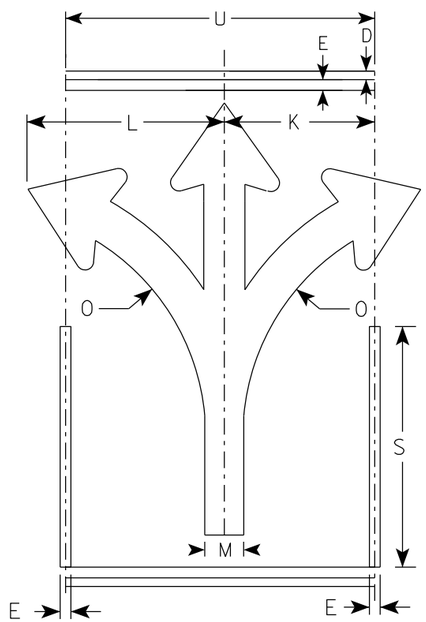

(D)

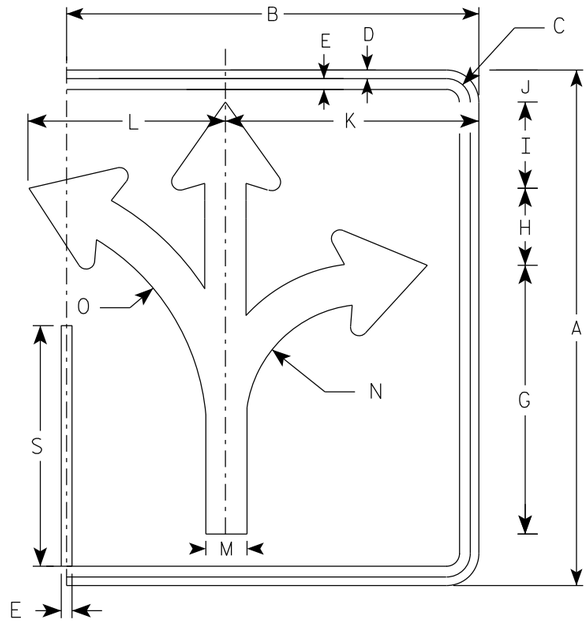

(D)

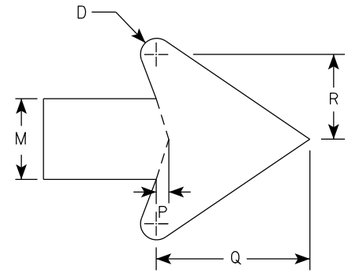

ARROW DETAIL

SIZE	A	B	C	D	E	F	G	H	I	J	K	L	M	N	O	P	Q	R	S	T	U	V	W	X	Y	Z	ENDS Area sq. ft.	MIDDLE Area sq. ft.
1																												
2S	30	24	1 3/8	1/2	5/8		15 5/8	4 1/2	5	1 7/8	14 3/4	11 1/2	2 3/8	7	13 1/4	3/8	4 1/2	2 1/2	14		18						5.0	3.75
2M	30	24	1 3/8	1/2	5/8		15 5/8	4 1/2	5	1 7/8	14 3/4	11 1/2	2 3/8	7	13 1/4	3/8	4 1/2	2 1/2	14		18						5.0	3.75
3	36	30	1 3/8	1/2	5/8		18 3/4	5 1/2	6	2 1/4	17 1/4	17 1/4	2 7/8	8 3/8	16	1/2	5 1/2	3	16 3/4		24						7.5	6.0
4	48	36	2 1/4	3/4	1		24 7/8	7 1/4	7 7/8	3 1/8	23 1/8	18	3 3/4	11 1/8	21 1/4	5/8	7 1/8	4	22 3/8		30						12.0	10.0
5	48	36	2 1/4	3/4	1		24 7/8	7 1/4	7 7/8	3 1/8	23 1/8	18	3 3/4	11 1/8	21 1/4	5/8	7 1/8	4	22 3/8		30						12.0	10.0

STANDARD SIGN
R3-8 (D) Arrow

WISCONSIN DEPT OF TRANSPORTATION

APPROVED Matthew R Rauch
for State Traffic Engineer

DATE 5/21/19 PLATE NO. R3-8.1

PROJECT NO: | HWY: | COUNTY: | SHEET NO: 278 | E

NOTES

1. Sign is Type II - Type H Reflective
2. Color:
   Background - White
   Message - Black
3. Message Series - None

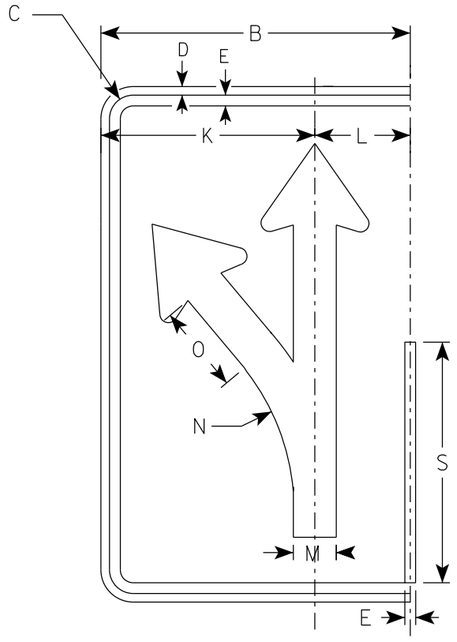

(E)

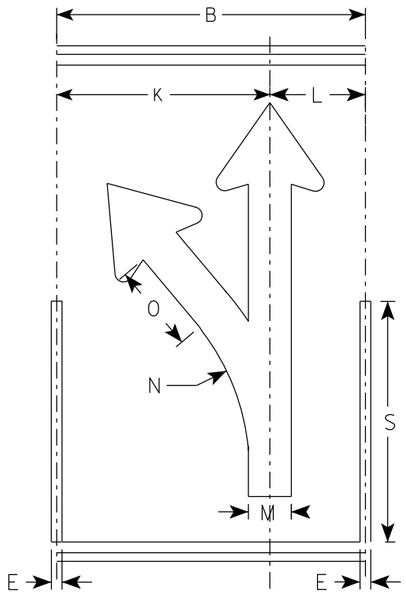

(E)

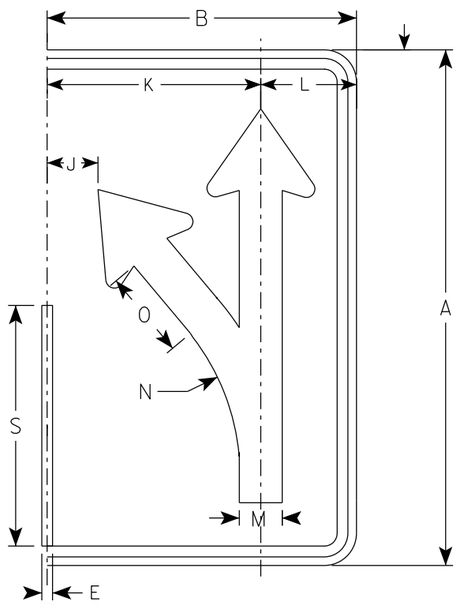

(E)

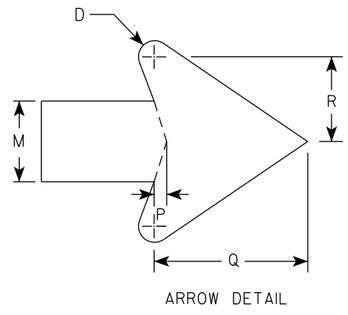

ARROW DETAIL

SIZE	A	B	C	D	E	F	G	H	I	J	K	L	M	N	O	P	Q	R	S	T	U	V	W	X	Y	Z	Area sq. ft.
1																											
2S	30	18	1 3/8	1/2	5/8		18 1/4	4 3/4	3 1/4	3	12 1/2	5 1/2	2 1/2	13 1/4	5 1/8	3/8	4 3/4	2 5/8	14								3.75
2M	30	18	1 3/8	1/2	5/8		18 1/4	4 3/4	3 1/4	3	12 1/2	5 1/2	2 1/2	13 1/4	5 1/8	3/8	4 3/4	2 5/8	14								3.75
3	36	24	1 3/8	1/2	5/8		21 7/8	5 5/8	4	4 7/8	16 1/8	7 3/4	3	15 7/8	6 1/8	1/2	5 3/4	3 1/8	16 3/4								6.0
4	48	30	2 1/4	3/4	1		29 1/8	7 1/2	5 1/4	5 3/8	20 1/2	9 1/2	4	21 1/4	8 1/4	5/8	7 5/8	4 1/4	22 3/8								10.0
5	48	30	2 1/4	3/4	1		29 1/8	7 1/2	5 1/4	5 3/8	20 1/2	9 1/2	4	21 1/4	8 1/4	5/8	7 5/8	4 1/4	22 3/8								10.0

STANDARD SIGN
R3-8 (E) Arrow

WISCONSIN DEPT OF TRANSPORTATION

APPROVED Matthew R Rauch
For State Traffic Engineer

DATE 5/21/19 PLATE NO. R3-8.1

PROJECT NO: | HWY: | COUNTY: | SHEET NO: 279 | E

NOTES

1. Sign is Type II - Type H Reflective
2. Color:
   Background - White
   Message - Black
3. Message Series - None

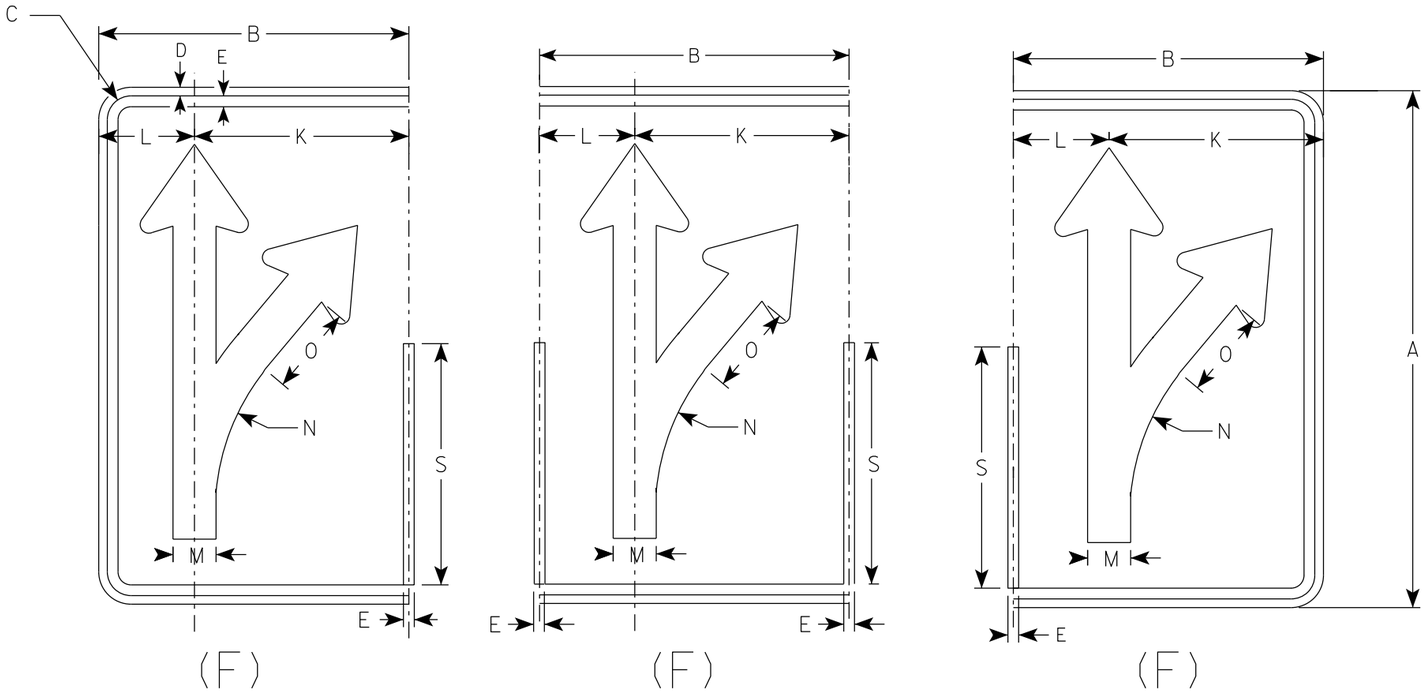

(F) (F) (F)

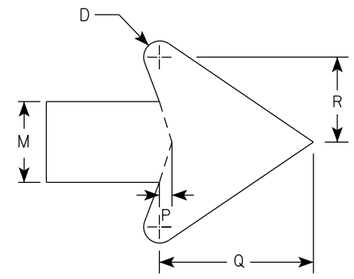

ARROW DETAIL

SIZE	A	B	C	D	E	F	G	H	I	J	K	L	M	N	O	P	Q	R	S	T	U	V	W	X	Y	Z	Area sq. ft.
1																											
2S	30	18	1 3/8	1/2	5/8		18 1/4	4 3/4	3 1/4	3	12 1/2	5 1/2	2 1/2	13 1/4	5 1/8	3/8	4 3/4	2 5/8	14								3.75
2M	30	18	1 3/8	1/2	5/8		18 1/4	4 3/4	3 1/4	3	12 1/2	5 1/2	2 1/2	13 1/4	5 1/8	3/8	4 3/4	2 5/8	14								3.75
3	36	24	1 3/8	1/2	5/8		21 7/8	5 5/8	4	4 7/8	16 1/8	7 3/4	3	15 7/8	6 1/8	1/2	5 3/4	3 1/8	16 3/4								6.0
4	48	30	2 1/4	3/4	1		29 1/8	7 1/2	5 1/4	5 3/8	20 1/2	9 1/2	4	21 1/4	8 1/4	5/8	7 5/8	4 1/4	22 3/8								10.0
5	48	30	2 1/4	3/4	1		29 1/8	7 1/2	5 1/4	5 3/8	20 1/2	9 1/2	4	21 1/4	8 1/4	5/8	7 5/8	4 1/4	22 3/8								10.0

STANDARD SIGN
R3-8 (F) Arrow

WISCONSIN DEPT OF TRANSPORTATION

APPROVED Matthew R Rauch
for State Traffic Engineer

DATE 5/21/19 PLATE NO. R3-8.1

PROJECT NO: | HWY: | COUNTY: | SHEET NO: 280 | E

NOTES

1. Sign is Type II - Type H Reflective
2. Color:
   Background - White
   Message - Black
3. Message Series - None

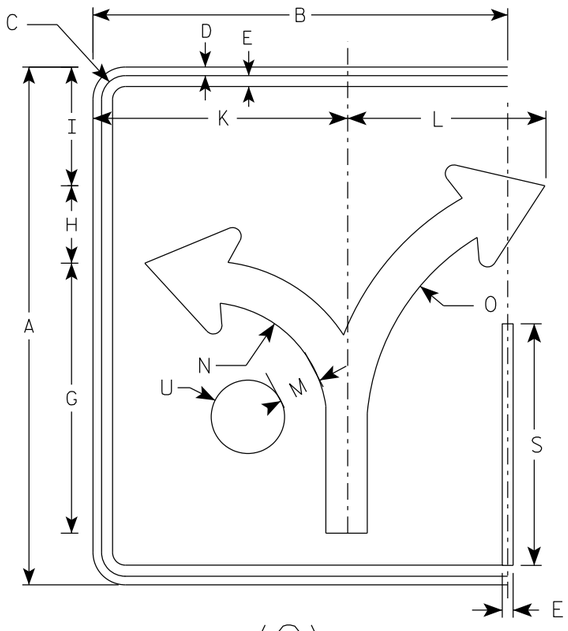

(G)

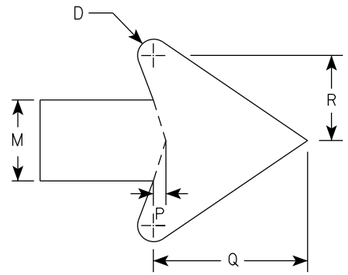

ARROW DETAIL

SIZE	A	B	C	D	E	F	G	H	I	J	K	L	M	N	O	P	Q	R	S	T	U	V	W	X	Y	Z	Area sq. ft.
1																											
2S	30	24	1 3/8	1/2	5/8		15 5/8	4 1/2	6 7/8		14 3/4	11 1/2	2 3/8	7	13 1/4	3/8	4 1/2	2 1/2	14		2 1/8						5.0
2M	30	24	1 3/8	1/2	5/8		15 5/8	4 1/2	6 7/8		14 3/4	11 1/2	2 3/8	7	13 1/4	3/8	4 1/2	2 1/2	14		2 1/8						5.0
3	36	30	1 3/8	1/2	5/8		18 3/4	5 1/2	8 1/4		17 1/4	17 1/4	2 7/8	8 3/8	16	1/2	5 1/2	3	16 3/4		2 1/2						7.5
4	48	36	2 1/4	3/4	1		24 7/8	7 1/4	11		23 1/8	18	3 3/4	11 1/8	21 1/4	5/8	7 1/8	4	22 3/8		3 3/8						12.0
5	48	36	2 1/4	3/4	1		24 7/8	7 1/4	11		23 1/8	18	3 3/4	11 1/8	21 1/4	5/8	7 1/8	4	22 3/8		3 3/8						12.0

STANDARD SIGN
R3-8 (G) Arrow

WISCONSIN DEPT OF TRANSPORTATION

APPROVED Matthew R Rauch
for State Traffic Engineer

DATE 5/21/19 PLATE NO. R3-8.1

PROJECT NO: | HWY: | COUNTY: | SHEET NO: 281 | E

FILE NAME : C:\CAEfiles\Projects\stdplate_R38.dgn PLOT DATE : 21-MAY 2019 4:38 PLOT BY : mscj9h PLOT NAME : PLOT SCALE : $$.....plotscale.....$$ WISDOT/CADDS SHEET 42

NOTES

1. Sign is Type II - Type H Reflective
2. Color:
   Background - White
   Message - Black
3. Message Series - None

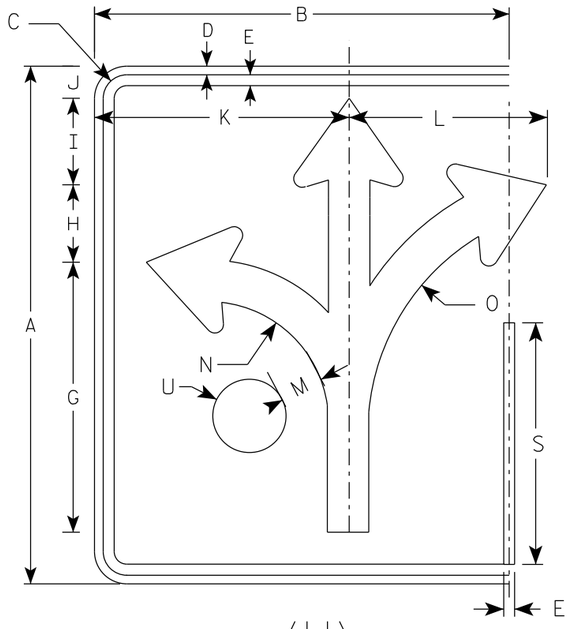

(H)

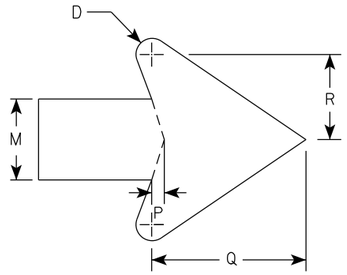

ARROW DETAIL

SIZE	A	B	C	D	E	F	G	H	I	J	K	L	M	N	O	P	Q	R	S	T	U	V	W	X	Y	Z	Area sq. ft.
1																											
2S	30	24	1 3/8	1/2	5/8		15 5/8	4 1/2	5	1 7/8	14 3/4	11 1/2	2 3/8	7	13 1/4	3/8	4 1/2	2 1/2	14		2 1/8						5.0
2M	30	24	1 3/8	1/2	5/8		15 5/8	4 1/2	5	1 7/8	14 3/4	11 1/2	2 3/8	7	13 1/4	3/8	4 1/2	2 1/2	14		2 1/8						5.0
3	36	30	1 3/8	1/2	5/8		18 3/4	5 1/2	6	3 1/8	17 1/4	17 1/4	2 7/8	8 3/8	16	1/2	5 1/2	3	16 3/4		2 1/2						7.5
4	48	36	2 1/4	3/4	1		24 7/8	7 1/4	7 7/8	3 1/8	23 1/8	18	3 3/4	11 1/8	21 1/4	5/8	7 1/8	4	22 3/8		3 3/8						12.0
5	48	36	2 1/4	3/4	1		24 7/8	7 1/4	7 7/8	3 1/8	23 1/8	18	3 3/4	11 1/8	21 1/4	5/8	7 1/8	4	22 3/8		3 3/8						12.0

STANDARD SIGN
R3-8 (H) Arrow

WISCONSIN DEPT OF TRANSPORTATION

APPROVED Matthew R Rauch
for State Traffic Engineer

DATE 5/21/19 PLATE NO. R3-8.1

PROJECT NO:	HWY:	COUNTY:		SHEET NO: 282	E

NOTES

1. Sign is Type II - Type H Reflective
2. Color:
   Background - White
   Message - Black
3. Message Series - None

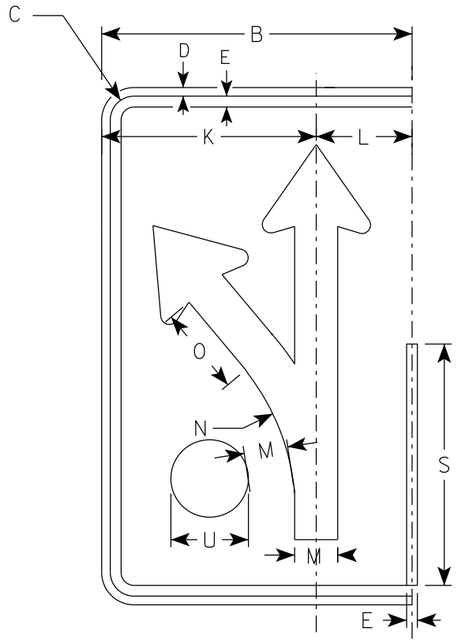

(I)

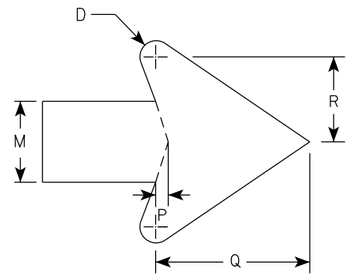

ARROW DETAIL

SIZE	A	B	C	D	E	F	G	H	I	J	K	L	M	N	O	P	Q	R	S	T	U	V	W	X	Y	Z	Area sq. ft.
1																											
2S	30	18	1 3/8	1/2	5/8		18 1/4	4 3/4	3 1/4	3	12 1/2	5 1/2	2 1/2	13 1/4	5 1/8	3/8	4 3/4	2 5/8	14		2 1/8						3.75
2M	30	18	1 3/8	1/2	5/8		18 1/4	4 3/4	3 1/4	3	12 1/2	5 1/2	2 1/2	13 1/4	5 1/8	3/8	4 3/4	2 5/8	14		2 1/8						3.75
3	36	24	1 3/8	1/2	5/8		21 7/8	5 5/8	4	4 7/8	16 1/8	7 3/4	3	15 7/8	6 1/8	1/2	5 3/4	3 1/8	16 3/4		2 1/2						6.0
4	48	30	2 1/4	3/4	1		29 1/8	7 1/2	5 1/4	5 3/8	20 1/2	9 1/2	4	21 1/4	8 1/4	5/8	7 5/8	4 1/4	22 3/8		3 3/8						10.0
5	48	30	2 1/4	3/4	1		29 1/8	7 1/2	5 1/4	5 3/8	20 1/2	9 1/2	4	21 1/4	8 1/4	5/8	7 5/8	4 1/4	22 3/8		3 3/8						10.0

STANDARD SIGN
R3-8 (I) Arrow

WISCONSIN DEPT OF TRANSPORTATION

APPROVED Matthew R Rauch
For State Traffic Engineer

DATE 5/21/19 PLATE NO. R3-8.1

PROJECT NO: | HWY: | COUNTY: | SHEET NO: 283 | E

NOTES

1. Sign is Type II - Type H Reflective
2. Color:
   Background - White
   Message - Black
3. Message Series - D

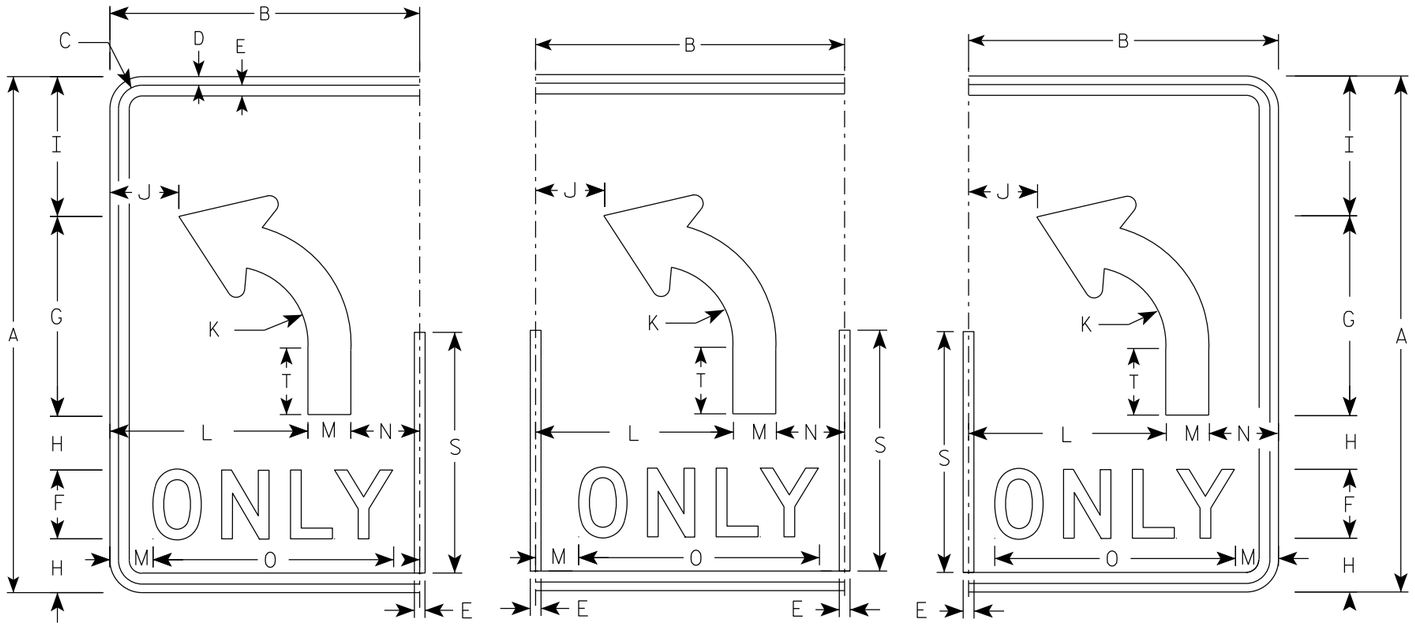

(L) (L) (L)

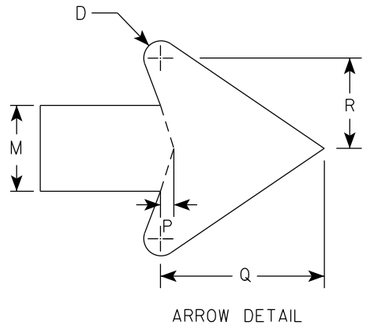

ARROW DETAIL

SIZE	A	B	C	D	E	F	G	H	I	J	K	L	M	N	O	P	Q	R	S	T	U	V	W	X	Y	Z	Area sq. ft.
1																											
2S	30	18	1 3/8	1/2	5/8	4	11 5/8	3 1/8	8 1/8	4	4 1/2	11 1/2	2 1/2	4	14	3/8	4 3/4	2 5/8	14	3 7/8							3.75
2M	30	18	1 3/8	1/2	5/8	4	11 5/8	3 1/8	8 1/8	4	4 1/2	11 1/2	2 1/2	4	14	3/8	4 3/4	2 5/8	14	3 7/8							3.75
3	36	24	1 3/8	1/2	5/8	5	14	3 1/2	9 3/4		5 3/8	15	3	6	17 5/8	1/2	5 3/4	3 1/8	16 3/4	4 5/8							6.0
4	48	30	2 1/4	3/4	1	6	18 5/8	5 1/8	13 1/8	6 1/8	7 1/4	18	4	8	21 3/4	5/8	7 5/8	4 1/4	22 3/8	6 1/4							10.0
5	48	30	2 1/4	3/4	1	6	18 5/8	5 1/8	13 1/8	6 1/8	7 1/4	18	4	8	21 3/4	5/8	7 5/8	4 1/4	22 3/8	6 1/4							10.0

STANDARD SIGN

R3-8 (L) Arrow

WISCONSIN DEPT OF TRANSPORTATION

APPROVED Matthew R Rauch
for State Traffic Engineer

DATE 5/21/19 PLATE NO. R3-8.1

PROJECT NO:

SHEET NO: 284 E

NOTES

1. Sign is Type II - Type H Reflective
2. Color:
   Background - White
   Message - Black
3. Message Series - D

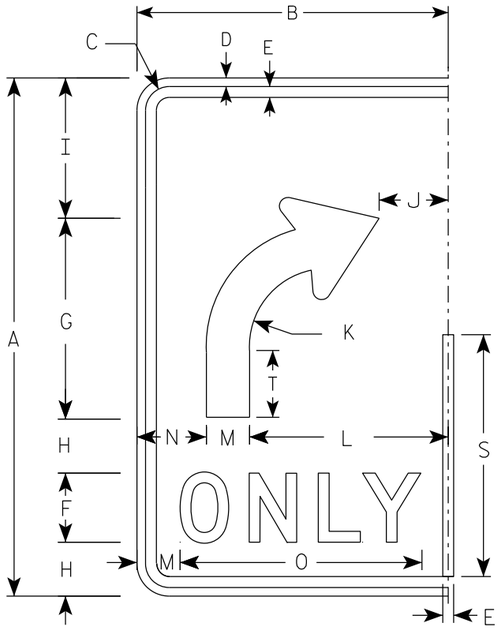

(R)

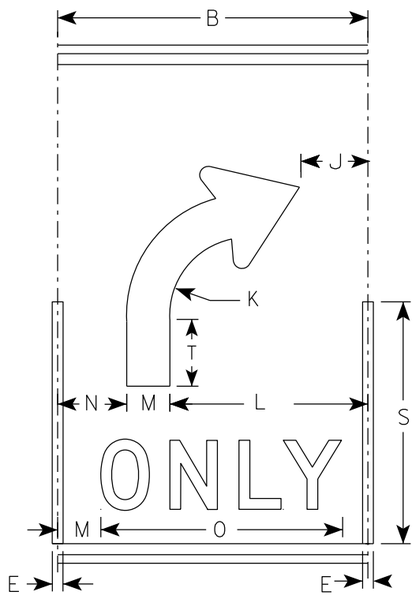

(R)

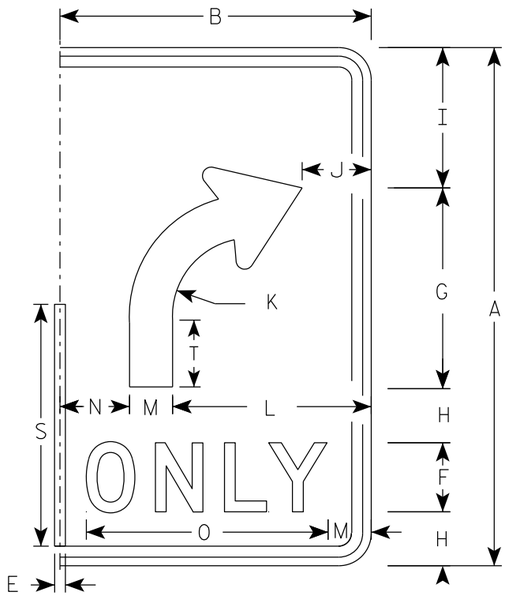

(R)

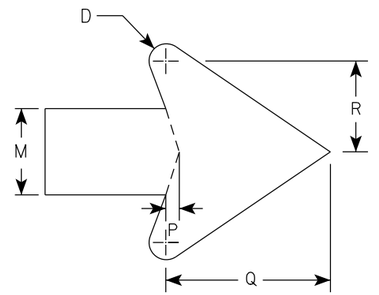

ARROW DETAIL

SIZE	A	B	C	D	E	F	G	H	I	J	K	L	M	N	O	P	Q	R	S	T	U	V	W	X	Y	Z	Area sq. ft.
1																											
2S	30	18	1 3/8	1/2	5/8	4	11 5/8	3 1/8	8 1/8	4	4 1/2	11 1/2	2 1/2	4	14	3/8	4 3/4	2 5/8	14	3 7/8							3.75
2M	30	18	1 3/8	1/2	5/8	4	11 5/8	3 1/8	8 1/8	4	4 1/2	11 1/2	2 1/2	4	14	3/8	4 3/4	2 5/8	14	3 7/8							3.75
3	36	24	1 3/8	1/2	5/8	5	14	3 1/2	9 3/4	6	5 3/8	15	3	6	17 5/8	1/2	5 3/4	3 1/8	16 3/4	4 5/8							6.0
4	48	30	2 1/4	3/4	1	6	18 5/8	5 1/8	13 1/8	6 1/8	7 1/4	18	4	8	21 3/4	5/8	7 5/8	4 1/4	22 3/8	6 1/4							10.0
5	48	30	2 1/4	3/4	1	6	18 5/8	5 1/8	13 1/8	6 1/8	7 1/4	18	4	8	21 3/4	5/8	7 5/8	4 1/4	22 3/8	6 1/4							10.0

STANDARD SIGN
R3-8 (R) Arrow

WISCONSIN DEPT OF TRANSPORTATION

APPROVED Matthew R Rauch
for State Traffic Engineer

DATE 5/21/19 PLATE NO. R3-8.1

PROJECT NO:

SHEET NO: 285 **E**

NOTES

1. Sign is Type II - Type H Reflective
2. Color:
   Background - White
   Message - Black
3. Message Series - None

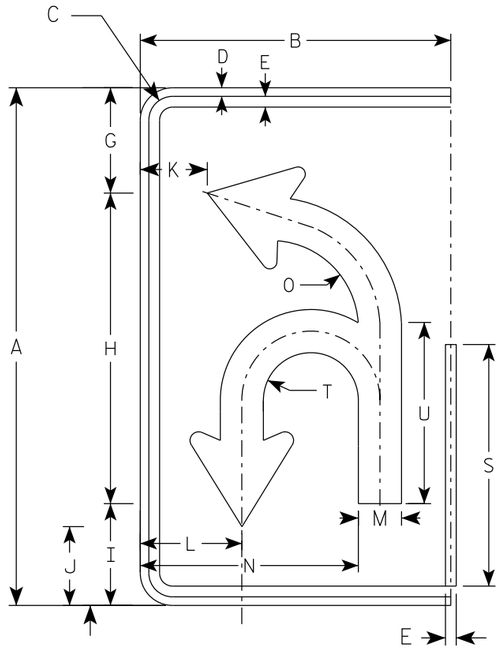

(U)

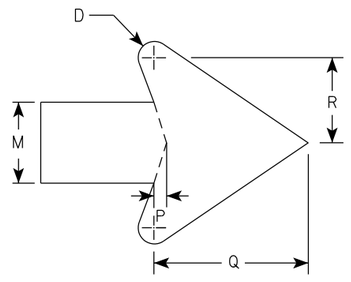

ARROW DETAIL

SIZE	A	B	C	D	E	F	G	H	I	J	K	L	M	N	O	P	Q	R	S	T	U	V	W	X	Y	Z	Area sq. ft.
1																											
2S	30	18	1 3/8	1/2	5/8		6 1/8	18	5 7/8	4 5/8	3 7/8	5 7/8	2 1/2	12 5/8	5 1/8	3/8	4 3/4	2 5/8	14	2 3/4	10 1/2						3.75
2M	30	18	1 3/8	1/2	5/8		6 1/8	18	5 7/8	4 5/8	3 7/8	5 7/8	2 1/2	12 5/8	5 1/8	3/8	4 3/4	2 5/8	14	2 3/4	10 1/2						3.75
3	36	24	1 3/8	1/2	5/8		21 7/8	21 5/8	7 1/8	5 1/2	5 7/8	8 1/4	3	16 3/8	6 1/8	1/2	5 3/4	3 1/8	16 3/4	3 1/4	12 5/8						6.0
4	48	30	2 1/4	3/4	1		29 1/8	28 3/4	9 3/8	7 1/4	6 7/8	10	4	20 7/8	8 1/8	5/8	7 5/8	4 1/4	22 3/8	4 3/8	16 3/4						10.0
5	48	30	2 1/4	3/4	1		29 1/8	28 3/4	9 3/8	7 1/4	6 7/8	10	4	20 7/8	8 1/8	5/8	7 5/8	4 1/4	22 3/8	4 3/8	16 3/4						10.0

STANDARD SIGN
R3-8 (U) Arrow

WISCONSIN DEPT OF TRANSPORTATION

APPROVED Matthew R Rauch
for State Traffic Engineer

DATE 5/21/19 PLATE NO. R3-8.1

PROJECT NO: | HWY: | COUNTY: | SHEET NO: 286 | E

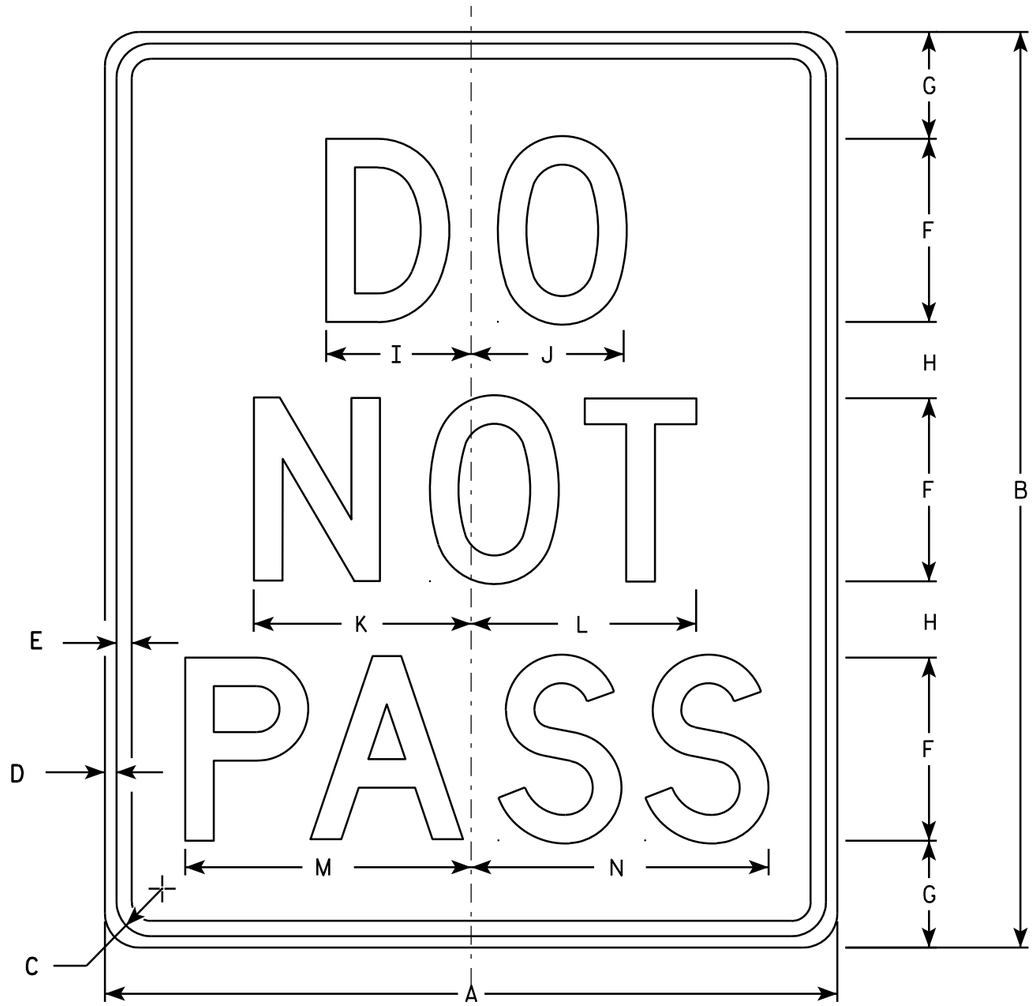

R4-1

NOTES

1. Sign is Type II - Type H Reflective - reference WIS DOT Standard Specification for HIGHWAY and STRUCTURE CONSTRUCTION latest edition.
2. Color:
   Background - White
   Message - Black
3. Message Series - D
4. Corners may be square or rounded when base material is plywood but borders shall be rounded as shown. When base material is metal, the corners and borders shall be rounded.

SIZE	A	B	C	D	E	F	G	H	I	J	K	L	M	N	O	P	Q	R	S	T	U	V	W	X	Y	Z	Area sq. ft.
1	18	24	1 1/8	3/8	1/2	4	3 1/2	2 1/2	3 1/8	3 1/4	4 3/4	4 7/8	6 1/4	6 1/2													3.0
2S	24	30	1 1/8	3/8	1/2	6	3 1/2	2 1/2	4 3/4	5	7 1/8	7 3/8	9 3/8	9 3/4													5.0
2M	24	30	1 1/8	3/8	1/2	6	3 1/2	2 1/2	4 3/4	5	7 1/8	7 3/8	9 3/8	9 3/4													5.0
3																											
4	36	48	1 5/8	5/8	3/4	8	7	5	6 1/4	6 5/8	9 1/2	9 3/4	12 1/2	13													12.0
5	48	60	2 1/4	3/4	1	10	8	7	7 3/4	8 3/8	11 7/8	12 1/4	15 5/8	16 1/4													20.0

STANDARD SIGN
R4-1

WISCONSIN DEPT OF TRANSPORTATION

APPROVED Matthew R Rauch
for State Traffic Engineer

DATE 3/25/2011 PLATE NO. R4-1.7

PROJECT NO: | HWY: | COUNTY: | SHEET NO: 287 | E

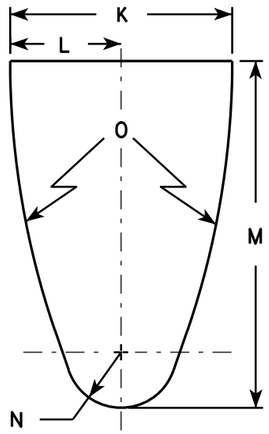

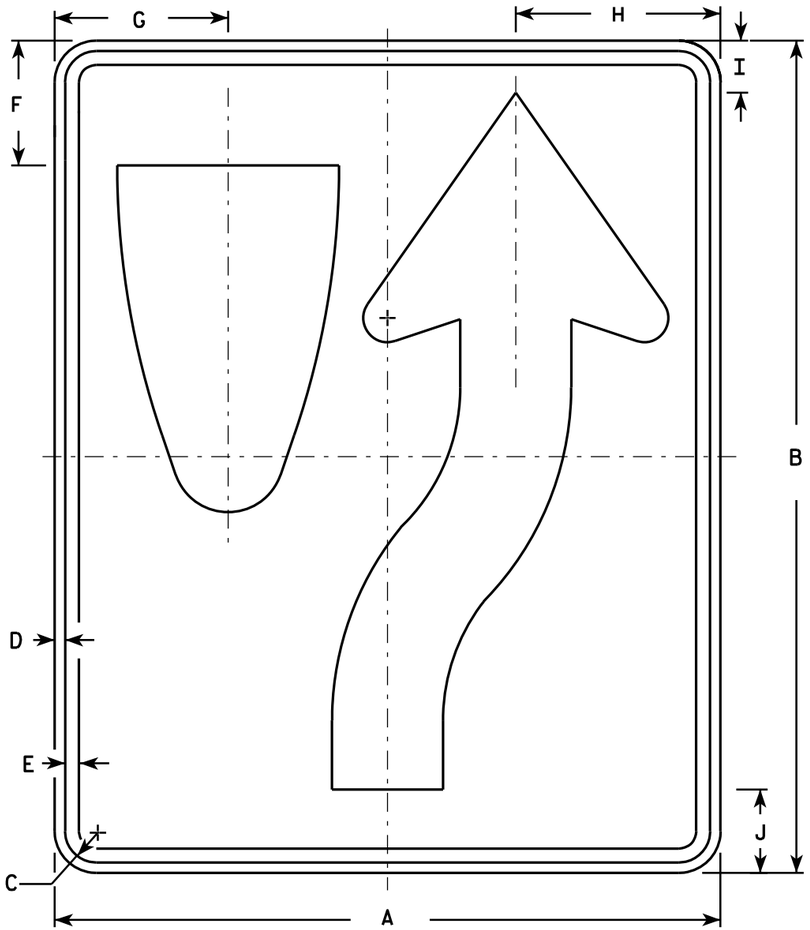

R4-7

NOTES

1. Sign is Type II - Type H Reflective - reference WIS DOT Standard Specification for HIGHWAY and STRUCTURE CONSTRUCTION latest edition. material is plywood but borders shall be rounded
2. Color:
   Background - White
   Message - Black
3. Corners may be square or rounded when base as shown. When base material is metal, the corners and borders shall be rounded.
4. R4-8 is the same as R4-7 except Legend is reversed.

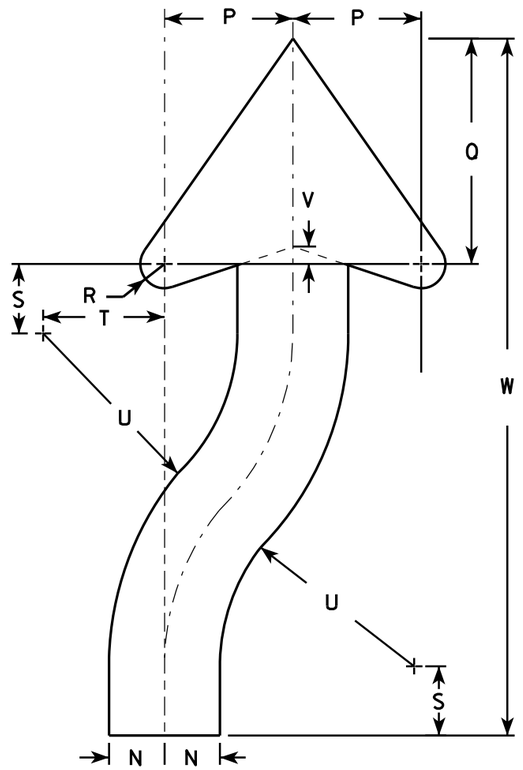

ARROW DETAIL

SIZE	A	B	C	D	E	F	G	H	I	J	K	L	M	N	O	P	Q	R	S	T	U	V	W	X	Y	Z	Area sq. ft.
1	18	24	1 1/8	3/8	1/2	3 3/8	4 3/4	5 1/2	1 3/8	2 1/4	6	3	9 3/8	1 1/2	22 1/2	3 1/2	6 1/8	5/8	1 7/8	3 1/4	6 3/4	1/2	20 3/8				3.0
2S	24	30	1 1/8	3/8	1/2	4 1/2	6 1/4	7 3/8	1 7/8	3	8	4	12 1/2	2	30	4 5/8	8 1/8	7/8	2 1/2	4 3/8	9	5/8	25 1/8				5.0
2M	24	30	1 1/8	3/8	1/2	4 1/2	6 1/4	7 3/8	1 7/8	3	8	4	12 1/2	2	30	4 5/8	8 1/8	7/8	2 1/2	4 3/8	9	5/8	25 1/8				5.0
3	36	48	1 3/4	1/2	5/8	6 3/4	9 3/8	11 1/8	2 7/8	4 1/2	12	6	18 3/4	3	45	6 7/8	12 1/4	1 1/4	3 3/4	6 5/8	13 1/2	1	40 3/4				12.0
4	36	48	1 3/4	1/2	5/8	6 3/4	9 3/8	11 1/8	2 7/8	4 1/2	12	6	18 3/4	3	45	6 7/8	12 1/4	1 1/4	3 3/4	6 5/8	13 1/2	1	40 3/4				12.0
5	48	60	2 1/4	3/4	1	9	12 1/2	14 3/4	3 3/4	6	16	8	25	4	60	9 1/4	16 1/4	1 5/8	5	8 3/4	18	1 1/4	50 1/4				20.0

STANDARD SIGN
R4-7 & R4-8

WISCONSIN DEPT OF TRANSPORTATION

APPROVED Matthew R Rauch for State Traffic Engineer

DATE 3/25/2011 PLATE NO. R4-7.8

PROJECT NO:	HWY:	COUNTY:		SHEET NO: 288	E

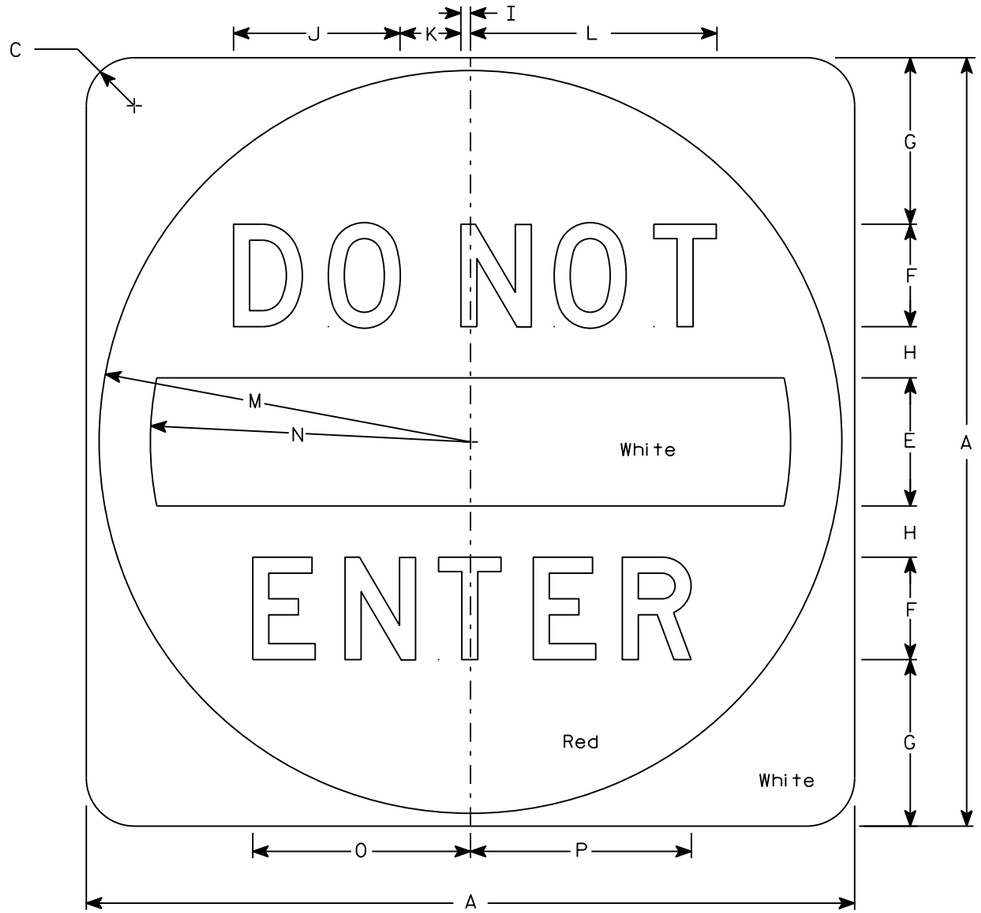

R5-1

NOTES

1. Sign is Type II - Type H Reflective
2. Color:
   Background - See detail
   Message - White
3. Message Series - D

SIZE	A	B	C	D	E	F	G	H	I	J	K	L	M	N	O	P	Q	R	S	T	U	V	W	X	Y	Z	Area sq. ft.
1																											
2S	30		1 7/8		5	4	6 1/2	2	3/8	6 1/2	2 3/8	9 5/8	14 1/2	12 1/2	8 1/2	8 5/8											6.25
2M	36		2 1/4		6	5	7 1/2	2 1/2	1/2	8 1/8	3	12 1/8	17 1/2	15	10 5/8	10 3/4											9.0
3	36		2 1/4		6	5	7 1/2	2 1/2	1/2	8 1/8	3	12 1/8	17 1/2	15	10 5/8	10 3/4											9.0
4	36		2 1/4		6	5	7 1/2	2 1/2	1/2	8 1/8	3	12 1/8	17 1/2	15	10 5/8	10 3/4											9.0
5	48		3		8	6	11	3	5/8	9 3/4	3 5/8	14 1/2	23 1/2	20	12 3/4	12 7/8											16.0

STANDARD SIGN
R5-1

WISCONSIN DEPT OF TRANSPORTATION

APPROVED Matthew R Rauch
for State Traffic Engineer

DATE 3/15/18 PLATE NO. R5-1.16

PROJECT NO: | HWY: | COUNTY: | SHEET NO: 289 | E

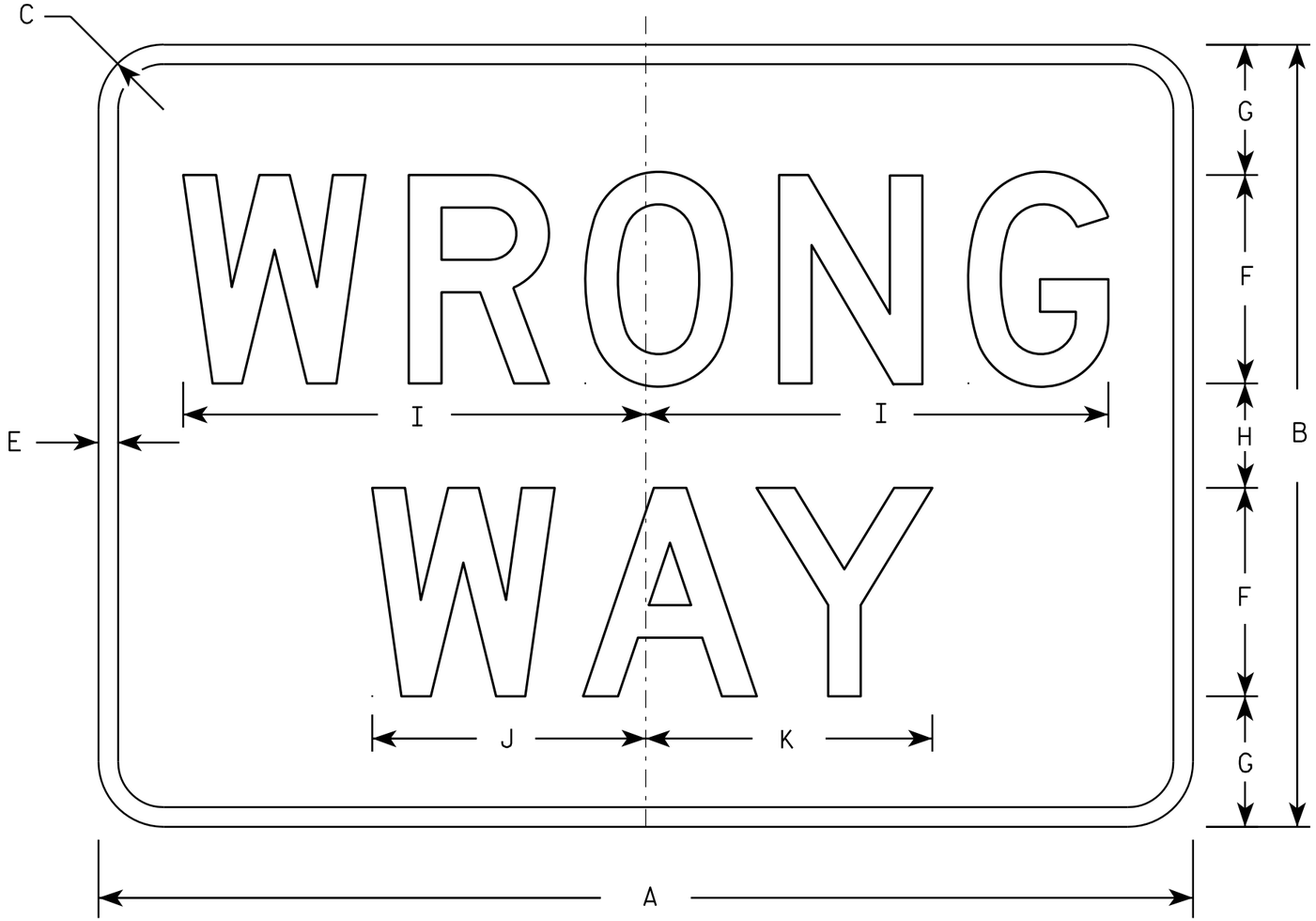

R5-1A

NOTES

1. Sign is Type II - Type H Reflective - reference WIS DOT Standard Specification for HIGHWAY and STRUCTURE CONSTRUCTION latest edition.
2. Color:
   Background - Red
   Message - White
3. Message Series - D
4. Corners may be square or rounded when base material is plywood but borders shall be rounded as shown. When base material is metal, the corners and borders shall be rounded.

SIZE	A	B	C	D	E	F	G	H	I	J	K	L	M	N	O	P	Q	R	S	T	U	V	W	X	Y	Z	Area sq. ft.
1	30	18	1 1/2		1/2	5	3	2	11	6 1/2	6 7/8																3.75
2S	36	24	2		5/8	6	4 1/2	3	13 1/4	7 7/8	8 1/4																6.00
2M	42	30	2 1/2		3/4	8	5	4	17 3/4	10 1/2	11																8.75
3	42	30	2 1/2		3/4	8	5	4	17 3/4	10 1/2	11																8.75
4	42	30	2 1/2		3/4	8	5	4	17 3/4	10 1/2	11																8.75
5	42	30	2 1/2		3/4	8	5	4	17 3/4	10 1/2	11																8.75

STANDARD SIGN
R5-1A

WISCONSIN DEPT OF TRANSPORTATION

APPROVED Matthew R Rauch
for State Traffic Engineer

DATE 12/17/10 PLATE NO. R5-1A.2

PROJECT NO: | HWY: | COUNTY: | SHEET NO: 290 | E

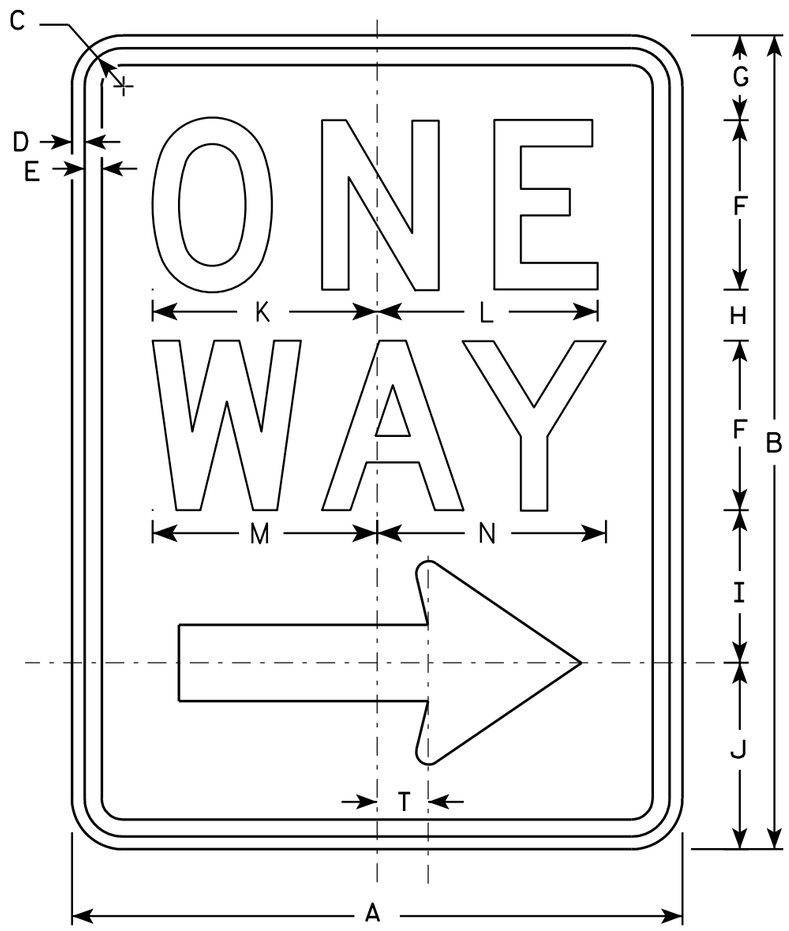

R6-2R

NOTES

1. Sign is Type II - Type H Reflective - reference WIS DOT Standard Specification for HIGHWAY and STRUCTURE CONSTRUCTION latest edition.
2. Color:
   Background - White
   Message - Black
3. Message Series - D
4. Corners may be square or rounded when base material is plywood but borders shall be rounded as shown. When base material is metal, the corners and borders shall be rounded.
5. R6-2L same as R6-2R except arrow points to the left.

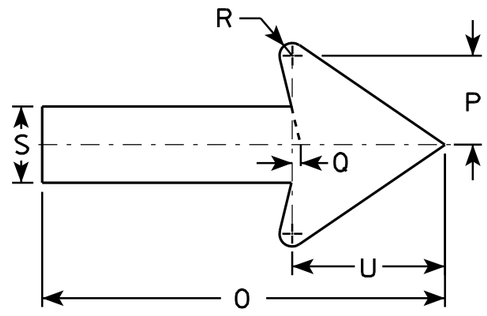

SIZE	A	B	C	D	E	F	G	H	I	J	K	L	M	N	O	P	O	R	S	T	U	V	W	X	Y	Z
1	18	24	1 1/8	3/8	1/2	5	2 1/2	1 1/2	4 1/2	5 1/2	6 5/8	6 1/2	6 5/8	6 3/4	11 7/8	2 5/8	1/4	3/8	2 1/4	1 1/2	4 1/2					
2S	24	30	1 1/8	3/8	1/2	6	3	2 1/2	5 1/2	7	8 1/8	8 1/8	8 1/2	8 5/8	16	3 1/2	3/8	1/2	3	2	6					
2M	30	36	1 3/8	1/2	5/8	8	2 1/2	2 5/8	6 7/8	8	10 1/2	10 1/2	11 1/4	11 1/4	20	4 3/8	1/2	5/8	3 3/4	2 1/2	7 1/2					
3	36	48	1 7/8	1/2	5/8	10	5 1/4	3 1/4	9	10 1/2	12 3/4	12 3/4	13 1/4	13 1/2	24	5 5/8	1/2	3/4	4 3/4	3	9					
4	36	48	1 7/8	1/2	5/8	10	5 1/4	3 1/4	9	10 1/2	12 3/4	12 3/4	13 1/4	13 1/2	24	5 5/8	1/2	3/4	4 3/4	3	9					
5																										

STANDARD SIGN
R6-2 R&L

WISCONSIN DEPT OF TRANSPORTATION

APPROVED Matthew R Rauch
for State Traffic Engineer

DATE 11/2/10 PLATE NO. R6-2.8

PROJECT NO:	HWY:	COUNTY:		SHEET NO: 291	E

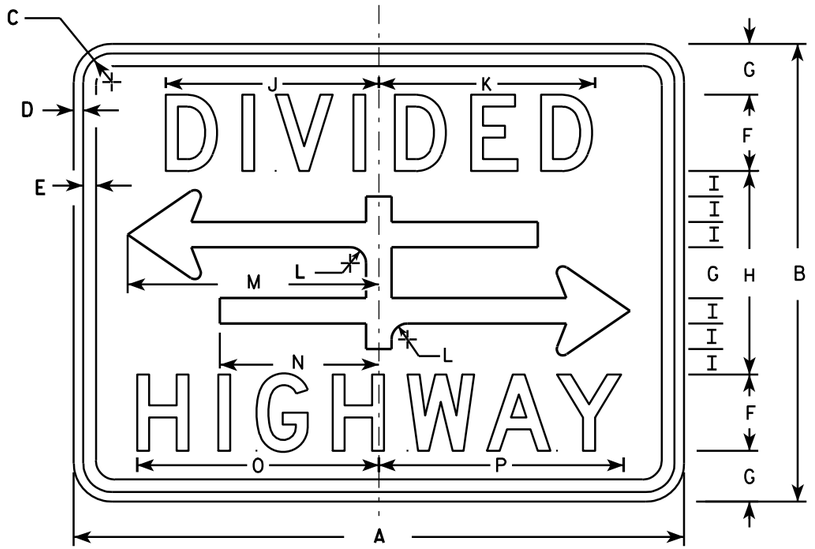

R6-3

NOTES

1. Sign is Type II - Type H Reflective - reference WIS DOT Standard Specification for HIGHWAY and STRUCTURE CONSTRUCTION latest edition.
2. Color:
   Background - White
   Message - Black
3. Message Series - D
4. Corners may be square or rounded when base material is plywood but borders shall be rounded as shown. When base material is metal, the corners and borders shall be rounded.

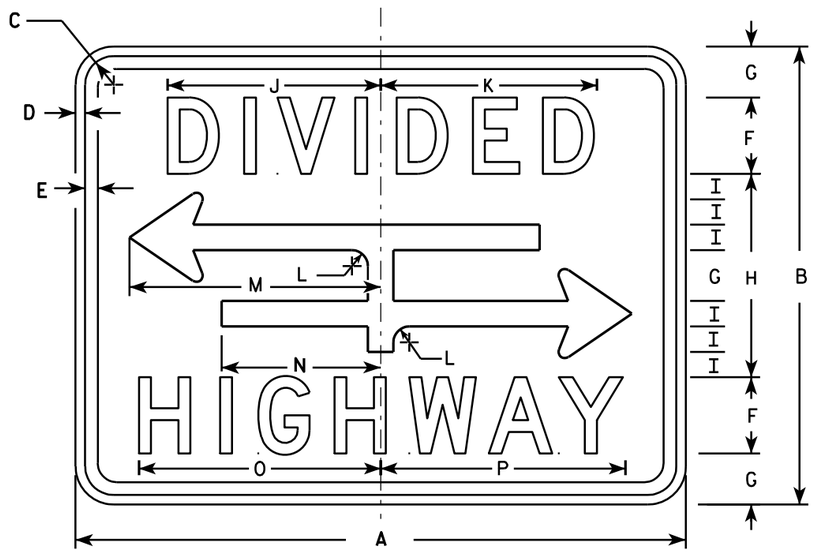

R6-3A

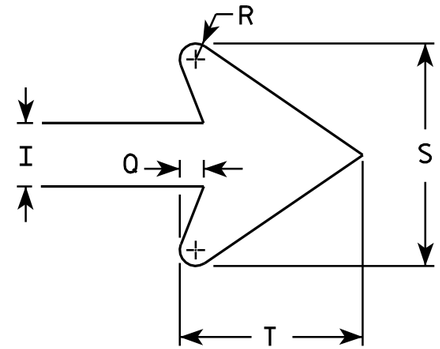

ARROW DETAIL

SIZE	A	B	C	D	E	F	G	H	I	J	K	L	M	N	O	P	Q	R	S	T	U	V	W	X	Y	Z	Area sq. ft.
1	24	18	1 1/8	3/8	3/8	3	2	8	1	8 3/8	8 1/2	5/8	9 7/8	6 1/4	9 1/2	9 5/8	3/8	1/4	3 1/2	2 3/4							3.0
2S	30	24	1 1/8	3/8	1/2	4	2 5/8	10 3/4	1 3/8	10 1/2	10 5/8	7/8	12 1/2	7 7/8	12 1/4	12 3/8	1/2	3/8	4 5/8	3 5/8							5.0
2M	30	24	1 1/8	3/8	1/2	4	2 5/8	10 3/4	1 3/8	10 1/2	10 5/8	7/8	12 1/2	7 7/8	12 1/4	12 3/8	1/2	3/8	4 5/8	3 5/8							5.0
3																											
4																											
5																											

STANDARD SIGN
R6-3 & R6-3A

WISCONSIN DEPT OF TRANSPORTATION

APPROVED Matthew R Rauch
for State Traffic Engineer

DATE 3/31/2011 PLATE NO. R6-3.5

PROJECT NO:

SHEET NO: 292 E

NOTES

1. Sign is Type II - Type F Reflective - reference WIS DOT Standard Specification for HIGHWAY and STRUCTURE CONSTRUCTION latest edition.
2. Color:
   Background - Yellow
   Message - Black
3. Corners may be square or rounded when base material is plywood but borders shall be rounded as shown. When base material is metal, the corners and borders shall be rounded.
4. W1-2L is the same as W1-2R except the arrow is reversed along the vertical centerline.

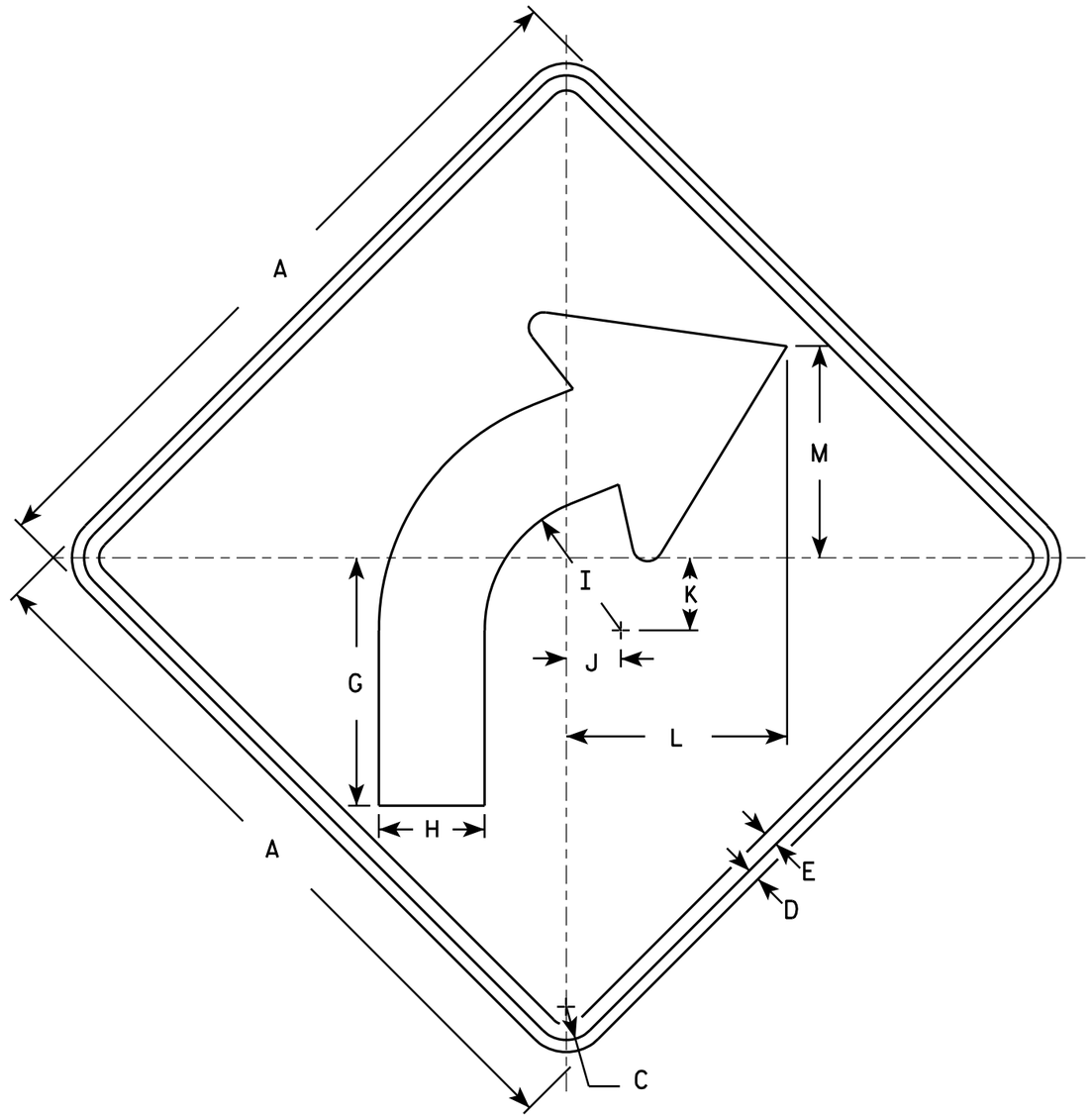

W1-2R

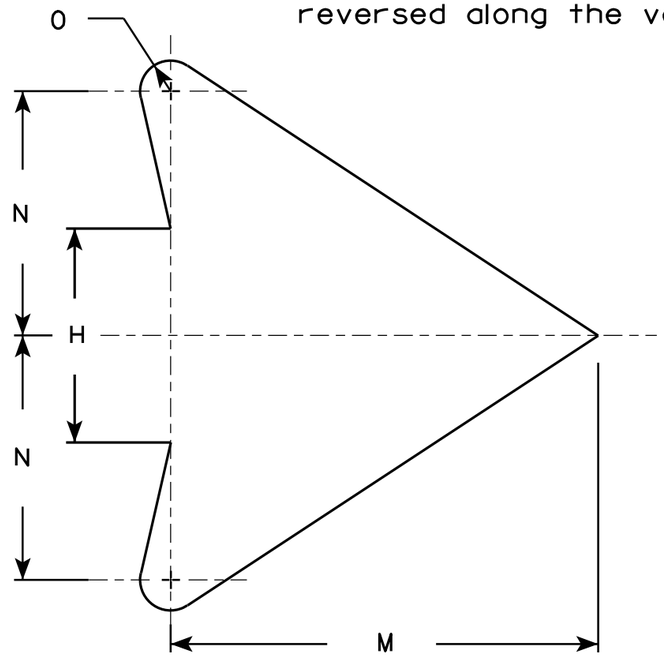

ARROW DETAIL

SIZE	A	B	C	D	E	F	G	H	I	J	K	L	M	N	O	P	Q	R	S	T	U	V	W	X	Y	Z	Area sq. ft.
1	24		1 1/8	3/8	1/2		8 1/4	3 1/2	4 1/2	1 3/4	2 3/8	7 1/4	7	4	1/2												4.0
2S	30		1 3/8	1/2	5/8		10 1/4	4 3/8	5 5/8	2 1/4	3	9 1/8	8 3/4	5	5/8												6.25
2M	36		1 5/8	5/8	3/4		12 3/8	5 1/4	6 3/4	2 5/8	3 1/2	10 7/8	10 1/2	6	3/4												9.0
3	36		1 5/8	5/8	3/4		12 3/8	5 1/4	6 3/4	2 5/8	3 1/2	10 7/8	10 1/2	6	3/4												9.0
4	36		1 5/8	5/8	3/4		12 3/8	5 1/4	6 3/4	2 5/8	3 1/2	10 7/8	10 1/2	6	3/4												9.0
5	48		2 1/4	3/4	1		16 1/2	7	9	3 1/2	4 5/8	14 1/2	14	8	1												16.0

STANDARD SIGN
W1-2

WISCONSIN DEPT OF TRANSPORTATION

APPROVED Matthew R Rauch
for State Traffic Engineer

DATE 5/15/12 PLATE NO. W1-2.10

PROJECT NO:	HWY:	COUNTY:		SHEET NO: 293	E

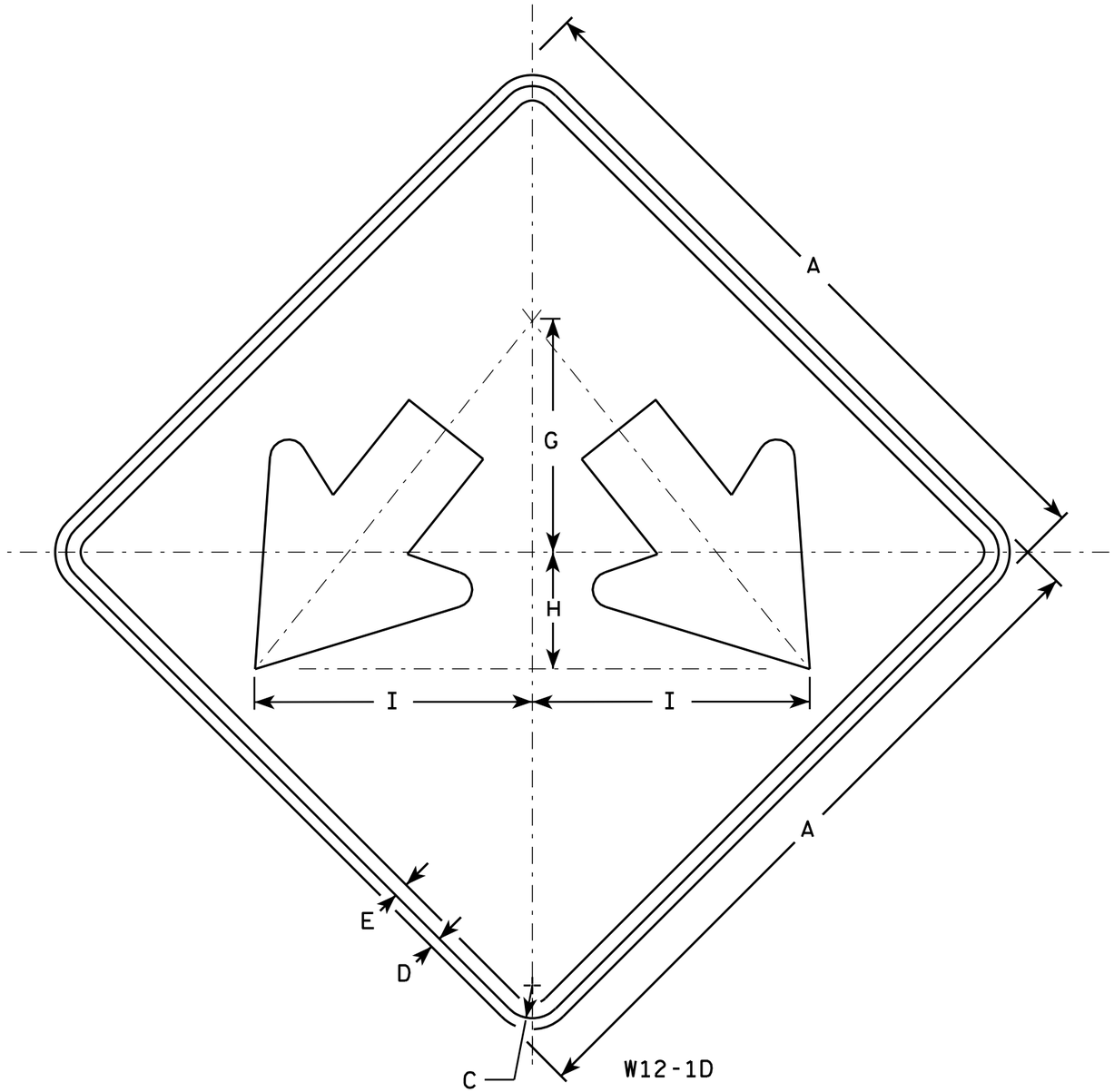

NOTES

1. Sign is Type II - Type F Reflective - reference WIS DOT Standard Specification for HIGHWAY and STRUCTURE CONSTRUCTION latest edition.
2. Color:
   Background - Yellow
   Message - Black
3. Corners may be square or rounded when base material is plywood but borders shall be rounded as shown. When base material is metal, the corners and borders shall be rounded.

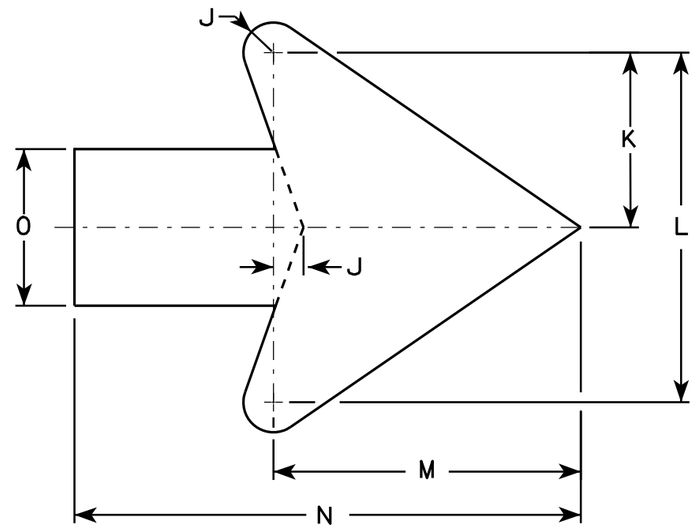

Arrow Detail

SIZE	A	B	C	D	E	F	G	H	I	J	K	L	M	N	O	P	Q	R	S	T	U	V	W	X	Y	Z	Area sq. ft.
1																											
2S	24		1 1/8	1/2	3/8		8	4	9 1/2	3/8	3 3/8	7 1/4	6 3/8	10 3/8	3 1/4												4.0
2M	24		1 1/8	1/2	3/8		8	4	9 1/2	3/8	3 3/8	7 1/4	6 3/8	10 3/8	3 1/4												4.0
3	30		1 3/8	1/2	5/8		10	5	11 7/8	3/4	4 1/2	9	7 7/8	13	4												6.25
4	36		1 3/8	1/2	5/8		12	6	14 1/4	1	5 1/2	10 7/8	9 5/8	15 3/4	4 3/4												9.0
5	48		2 1/4	3/4	1		16	8	19	1 1/4	7 1/4	14 1/2	12 3/4	21	6 1/4												16.0

STANDARD SIGN
W12-1D

WISCONSIN DEPT OF TRANSPORTATION

APPROVED Matthew R Rauch
for State Traffic Engineer

DATE 3/13/13 PLATE NO. W12-1D.15

PROJECT NO:	HWY:	COUNTY:		SHEET NO: 294	E

FILE NAME : C:\CAEFiles\Projects\tr_stdplate\W121D.DGN PLOT DATE : 13-MAR-2013 13:26 PLOT BY : mscj9h PLOT NAME : PLOT SCALE : 4.713802:1.000000

WISDOT/CADDS SHEET 42

7

7

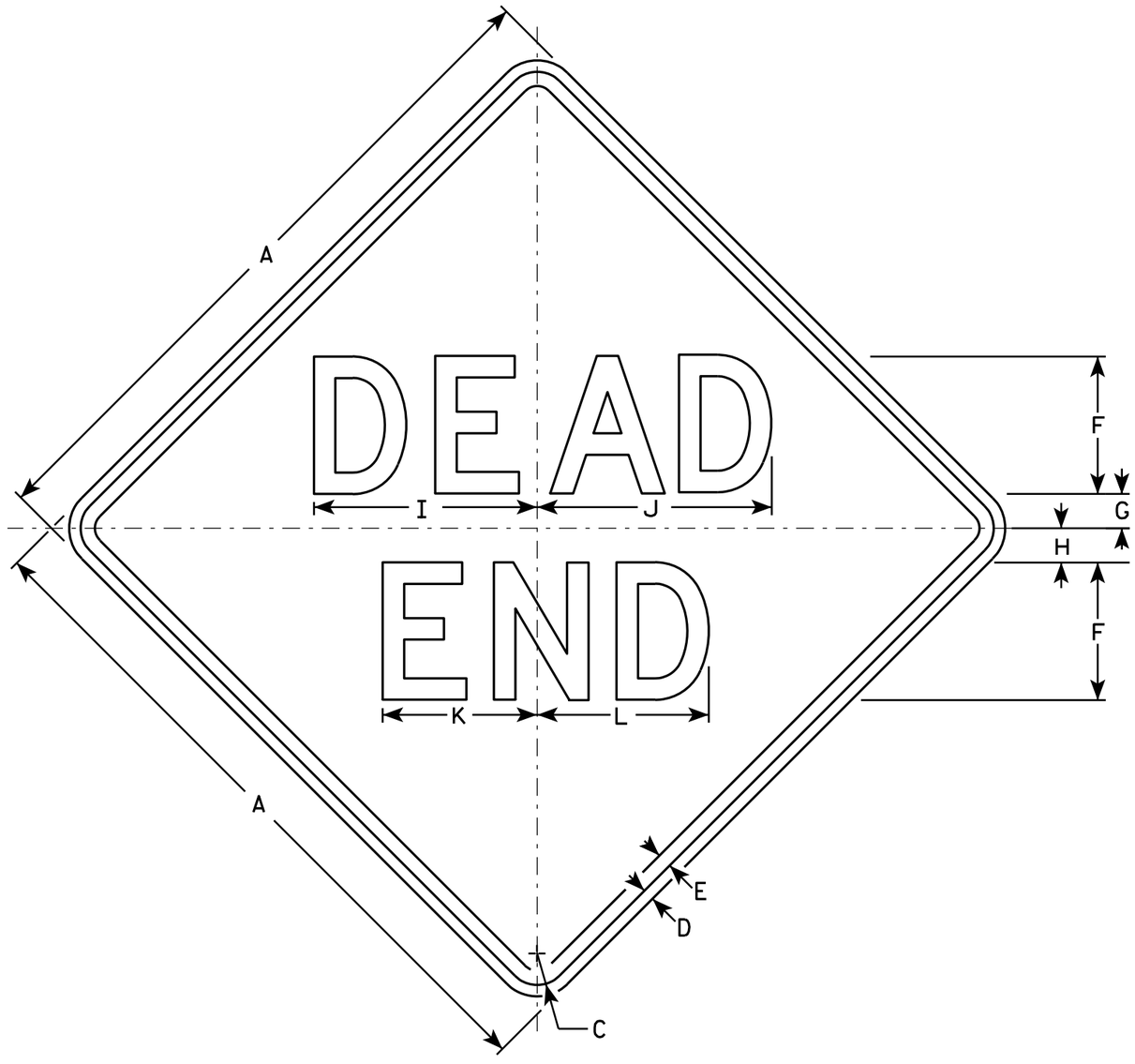

W14-1

NOTES

1. Sign is Type II - Type F Reflective - reference WIS DOT Standard Specification for HIGHWAY and STRUCTURE CONSTRUCTION latest edition.
2. Color:
   Background - Yellow
   Message - Black
3. Message Series - D
4. Corners may be square or rounded when base material is plywood but borders shall be rounded as shown. When base material is metal, the corners and borders shall be rounded.

SIZE	A	B	C	D	E	F	G	H	I	J	K	L	M	N	O	P	Q	R	S	T	U	V	W	X	Y	Z	Area sq. ft.
1	24		1 1/8	3/8	1/2	5	1	2	8 1/4	8 5/8	5 5/8	6 1/4															4.0
2S	30		1 3/8	1/2	5/8	6	1 1/2	2 1/2	9 3/4	10 1/4	6 3/4	7 1/2															6.25
2M	30		1 3/8	1/2	5/8	6	1 1/2	2 1/2	9 3/4	10 1/4	6 3/4	7 1/2															6.25
3	36		1 5/8	5/8	3/4	7	2	3	11 3/8	12	7 7/8	8 3/4															9.0
4																											
5																											

STANDARD SIGN
W14-1

WISCONSIN DEPT OF TRANSPORTATION

APPROVED Matthew R Rauch
for State Traffic Engineer

DATE 3/13/13 PLATE NO. W14-1.7

PROJECT NO:	HWY:	COUNTY:		SHEET NO: 295	E

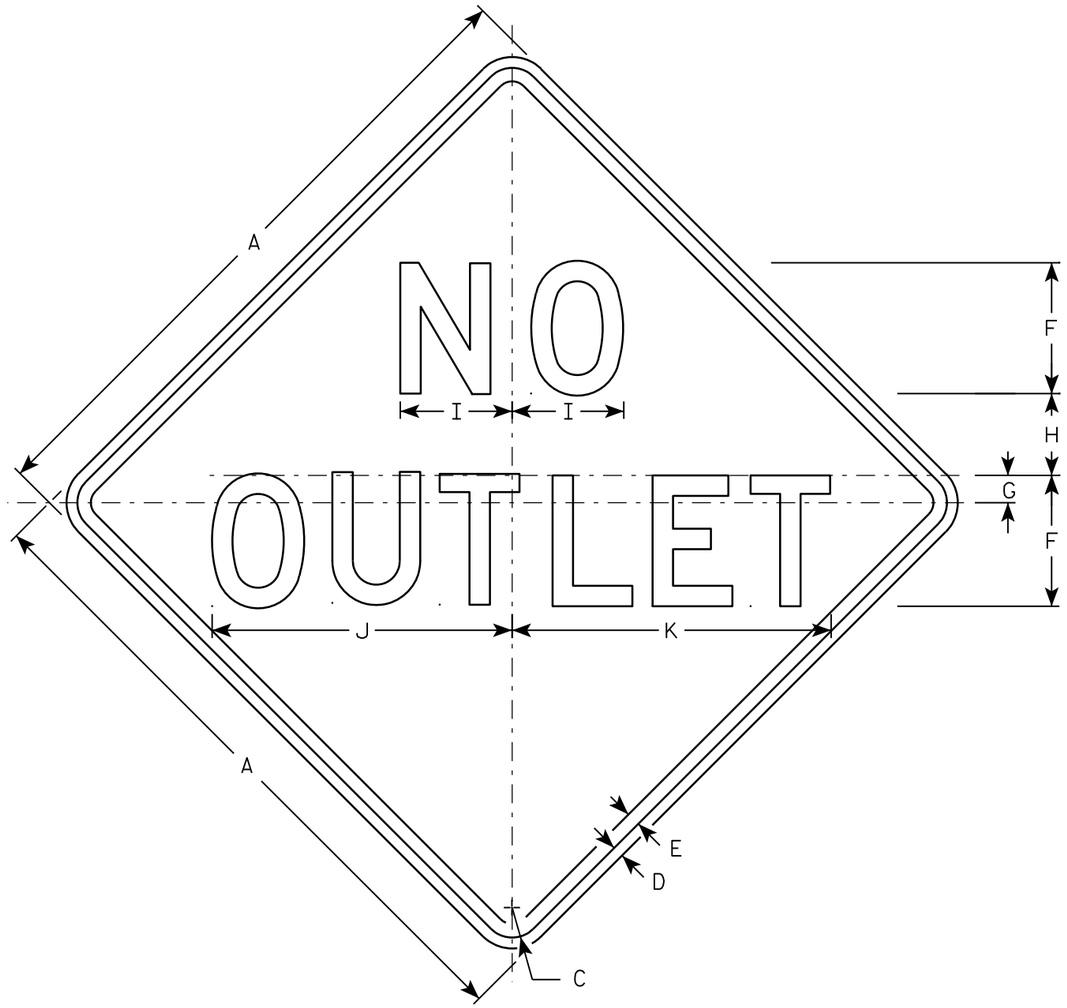

W14-2

NOTES

1. Sign is Type II - Type F Reflective - reference WIS DOT Standard Specification for HIGHWAY and STRUCTURE CONSTRUCTION latest edition.
2. Color:
   Background - YELLOW
   Message - BLACK
3. Message Series - D
4. Corners may be square or rounded when base material is plywood but borders shall be rounded as shown. When base material is metal, the corners and borders shall be rounded.

SIZE	A	B	C	D	E	F	G	H	I	J	K	L	M	N	O	P	Q	R	S	T	U	V	W	X	Y	Z	Area sq. ft.
1	24		1 1/8	3/8	1/2	5	1	2 3/4	4 1/8	11 3/4	12 3/8																4.0
2S	30		1 3/8	1/2	5/8	6	1 1/4	3 3/4	5 1/8	13 3/4	14 5/8																6.25
2M	30		1 3/8	1/2	5/8	6	1 1/4	3 3/4	5 1/8	13 3/4	14 5/8																6.25
3	36		1 5/8	5/8	3/4	7	1 3/8	4 5/8	6	16 1/8	17 1/8																9.0
4																											
5																											

STANDARD SIGN
W14-2

WISCONSIN DEPT OF TRANSPORTATION

APPROVED Matthew R Rauch
for State Traffic Engineer

DATE 3/13/13 PLATE NO. W14-2.3

PROJECT NO:

SHEET NO: 296 E

FILE NAME : C:\CAEFiles\Projects\tr_stdplate\W142.DGN PLOT DATE : 13-MAR-2013 13:30 PLOT BY : mscj9h

WISDOT/CADDS SHEET 42

7

7

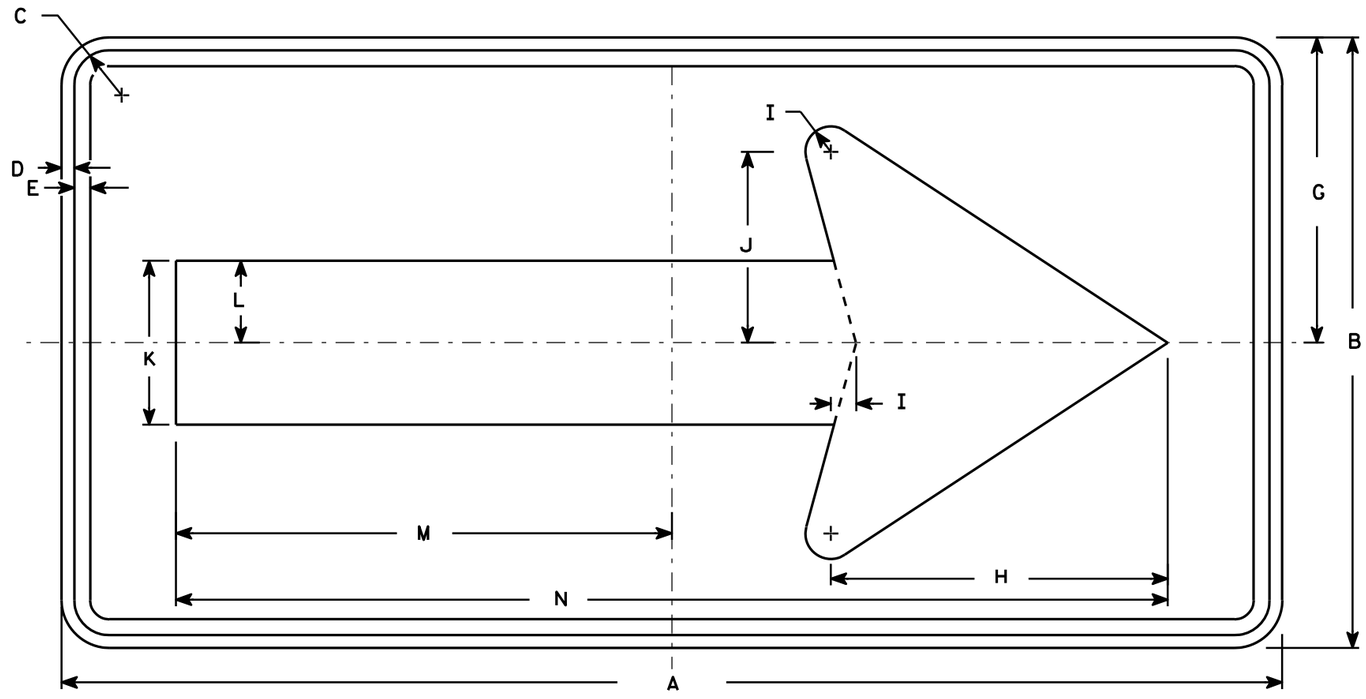

W1-6

NOTES

1. Sign is Type II - Type F Reflective - reference WIS DOT Standard Specification for HIGHWAY and STRUCTURE CONSTRUCTION latest edition.
2. Color:
   Background - Yellow
   Message - Black
3. Corners may be square or rounded when base material is plywood but borders shall be rounded as shown. When base material is metal, the corners and borders shall be rounded.

SIZE	A	B	C	D	E	F	G	H	I	J	K	L	M	N	O	P	Q	R	S	T	U	V	W	X	Y	Z	Area sq. ft.
1	36	18	1 1/8	3/8	3/8		9	10	3/4	5 5/8	4 3/4	2 3/8	14 5/8	29 1/4													4.5
2S	48	24	1 3/8	1/2	5/8		12	13 1/4	1	7 1/2	6 1/2	3 1/4	19 1/2	39													8.0
2M	48	24	1 3/8	1/2	5/8		12	13 1/4	1	7 1/2	6 1/2	3 1/4	19 1/2	39													8.0
3	60	30	1 3/8	1/2	5/8		15	16 1/4	1 1/4	9 1/4	8	4	24 3/8	48 3/4													12.5
4	60	30	1 3/8	1/2	5/8		15	16 1/4	1 1/4	9 1/4	8	4	24 3/8	48 3/4													12.5
5	96	48	2 1/4	3/4	1		24	26 1/2	2	15	13	6 1/2	39	78													32.0

STANDARD SIGN
W1-6

WISCONSIN DEPT OF TRANSPORTATION

APPROVED Matthew R Rauch
for State Traffic Engineer

DATE 6/7/10 PLATE NO. W1-6.8

PROJECT NO:	HWY:	COUNTY:		SHEET NO: 297

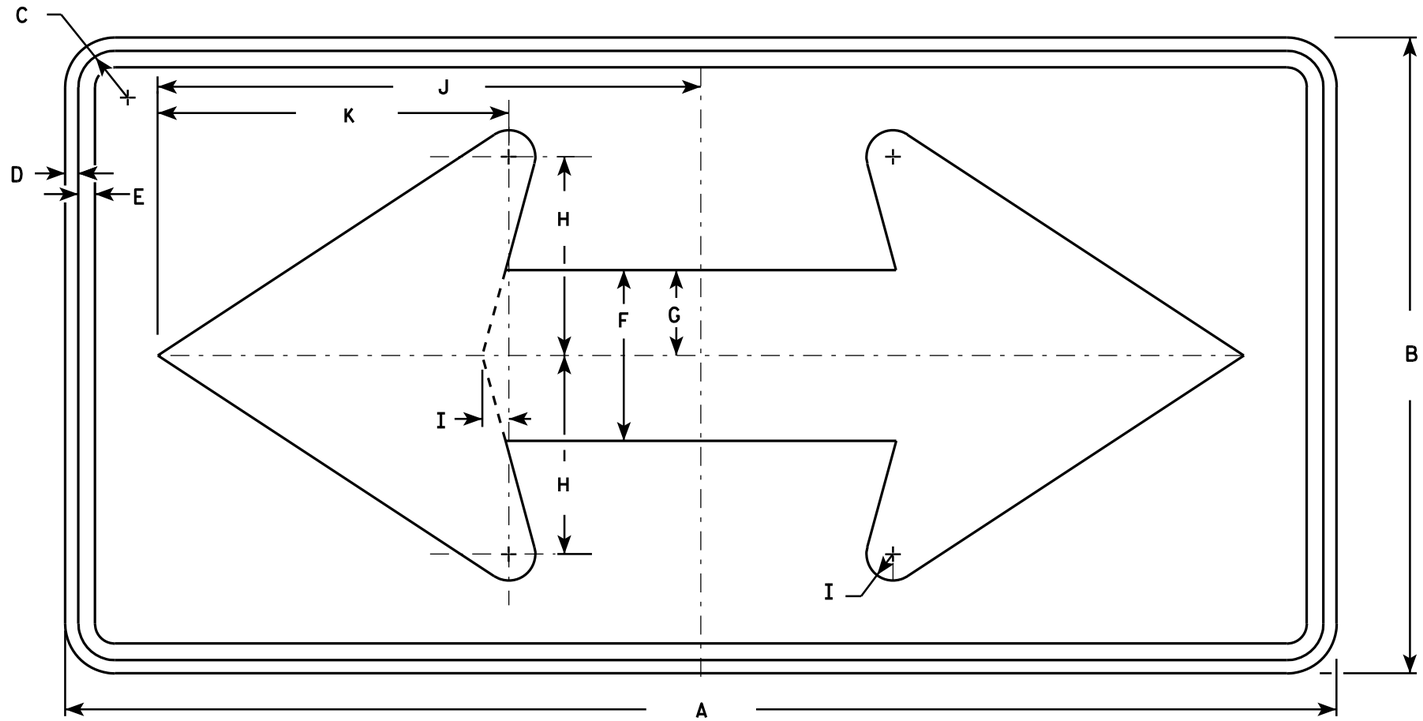

W1-7

NOTES

1. Sign is Type II - Type F Reflective - reference WIS DOT Standard Specification for HIGHWAY and STRUCTURE CONSTRUCTION latest edition.
2. Color:
   Background - Yellow
   Message - Black
3. Corners may be square or rounded when base material is plywood but borders shall be rounded as shown. When base material is metal, the corners and borders shall be rounded.

SIZE	A	B	C	D	E	F	G	H	I	J	K	L	M	N	O	P	Q	R	S	T	U	V	W	X	Y	Z	Area sq. ft.
1	36	18	1 1/8	3/8	1/2	5	2 1/2	5 3/4	3/4	15 5/8	10 1/8																4.5
2S	48	24	1 3/8	1/2	5/8	6 1/2	3 1/4	7 1/2	1	20 1/2	13 1/4																8.0
2M	48	24	1 3/8	1/2	5/8	6 1/2	3 1/4	7 1/2	1	20 1/2	13 1/4																8.0
3	60	30	1 3/8	1/2	5/8	8	4	9 1/4	1 1/4	25 3/8	16 1/4																12.5
4	60	30	1 3/8	1/2	5/8	8	4	9 1/4	1 1/4	25 3/8	16 1/4																12.5
5	96	48	2 1/4	3/4	1	13	6 1/2	15	2	41	26 1/2																32.0

STANDARD SIGN
W1-7

WISCONSIN DEPT OF TRANSPORTATION

APPROVED Matthew R Rauch
for State Traffic Engineer

DATE 6/7/10 PLATE NO. W1-7.7

PROJECT NO: | HWY: | COUNTY: | SHEET NO: 298 | E

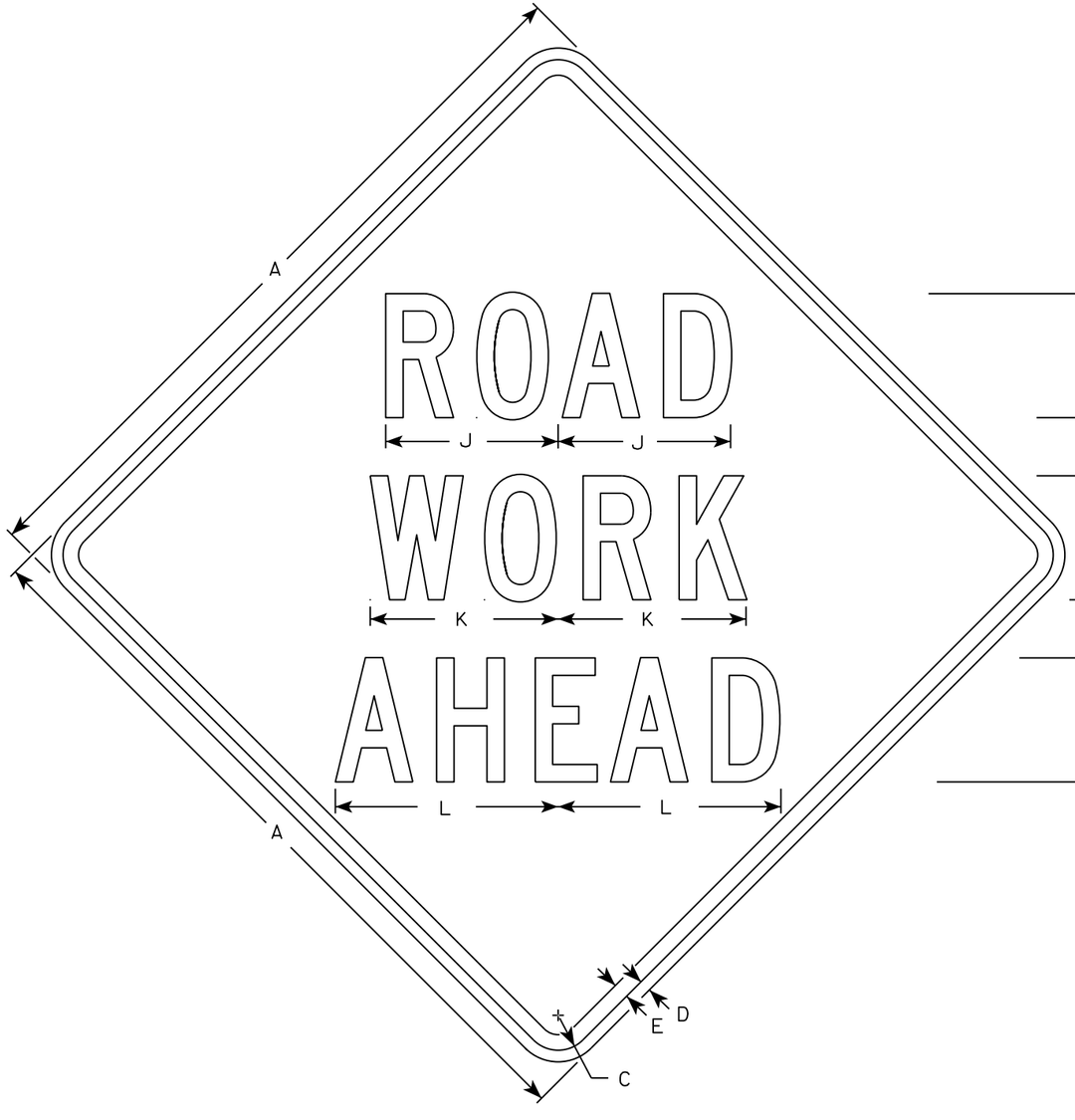

W20-1A

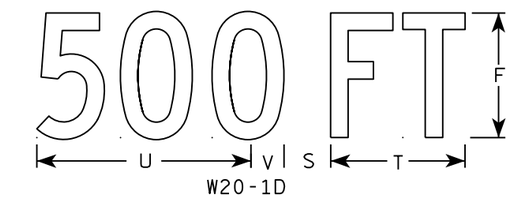

W20-1D

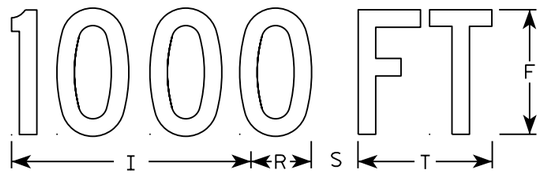

W20-1C

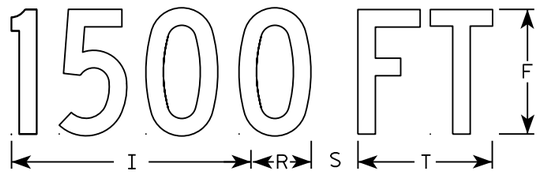

W20-1B

W20-1G

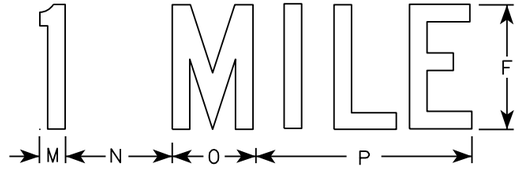

W20-1F

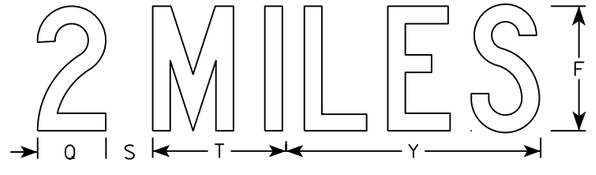

W20-1E

NOTES

1. Sign is Type II - Type F Reflective
2. Color:
   Background - Orange
   Message - Black
3. Message Series - C
4. Corners may be square or rounded when base material is plywood but borders shall be rounded as shown. When base material is metal, the corners and borders shall be rounded.

SIZE	A	B	C	D	E	F	G	H	I	J	K	L	M	N	O	P	Q	R	S	T	U	V	W	X	Y	Z	Area sq. ft.
1	36		1 3/8	1/2	5/8	5	2 5/8	3 1/4	10 1/8	7	7 5/8	8 7/8	1 1/8	4 1/2	3 1/2	9		2 1/2	2 1/4	5 5/8	9	1 3/8	8	1 3/4	10 3/4	6	9.0
2S	48		2 1/4	3/4	1	8	3 3/4	5 1/8	15 3/8	11 1/8	12 1/8	14 3/8	1 5/8	6 7/8	5 3/8	13 7/8	4 3/8	3 7/8	3	8 5/8	13 3/4	2 1/8	11 7/8	2 3/4	16 3/8	9	16.0
2M	48		2 1/4	3/4	1	8	3 3/4	5 1/8	15 3/8	11 1/8	12 1/8	14 3/8	1 5/8	6 7/8	5 3/8	13 7/8	4 3/8	3 7/8	3	8 5/8	13 3/4	2 1/8	11 7/8	2 3/4	16 3/8	9	16.0
3	48		2 1/4	3/4	1	8	3 3/4	5 1/8	15 3/8	11 1/8	12 1/8	14 3/8	1 5/8	6 7/8	5 3/8	13 7/8	4 3/8	3 7/8	3	8 5/8	13 3/4	2 1/8	11 7/8	2 3/4	16 3/8	9	16.0
4	48		2 1/4	3/4	1	8	3 3/4	5 1/8	15 3/8	11 1/8	12 1/8	14 3/8	1 5/8	6 7/8	5 3/8	13 7/8	4 3/8	3 7/8	3	8 5/8	13 3/4	2 1/8	11 7/8	2 3/4	16 3/8	9	16.0
5	48		2 1/4	3/4	1	8	3 3/4	5 1/8	15 3/8	11 1/8	12 1/8	14 3/8	1 5/8	6 7/8	5 3/8	13 7/8	4 3/8	3 7/8	3	8 5/8	13 3/4	2 1/8	11 7/8	2 3/4	16 3/8	9	16.0

STANDARD SIGN
W20-1A, B, C, D, F & G

WISCONSIN DEPT OF TRANSPORTATION

APPROVED Matthew R Rauch
for State Traffic Engineer

DATE 5/07/15 PLATE NO. W20-1.10
299

PROJECT NO:

SHEET NO: E

7

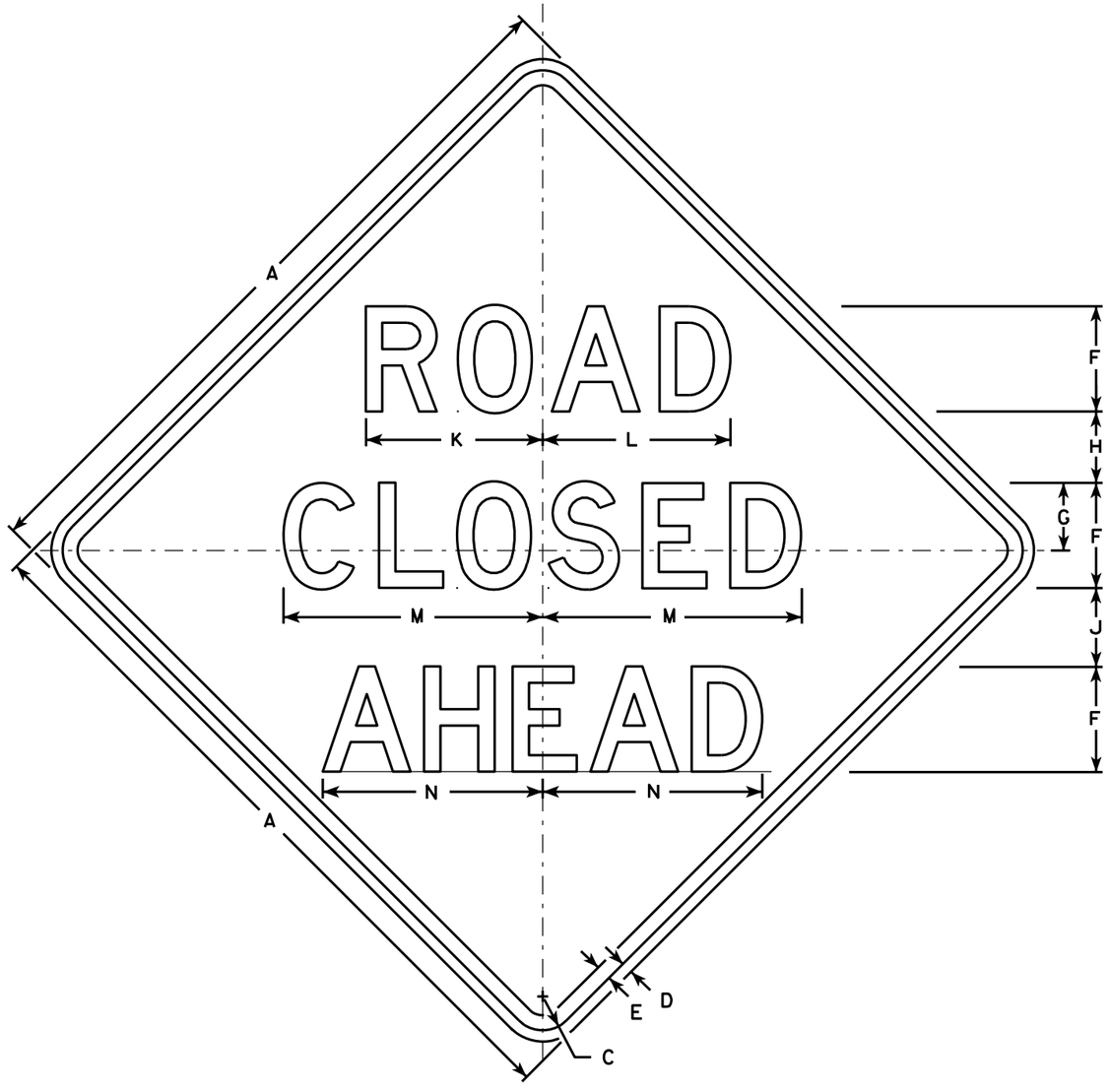

W20-3A

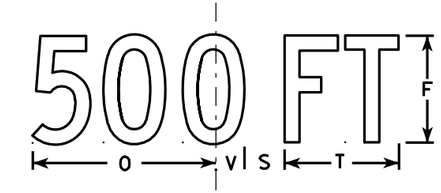

W20-3D

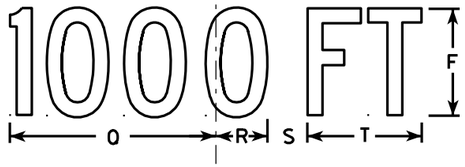

W20-3C

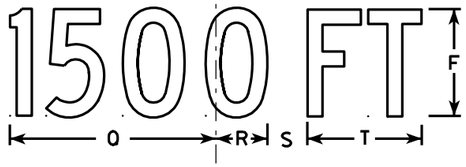

W20-3B

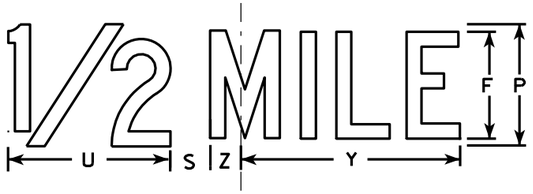

W20-3G

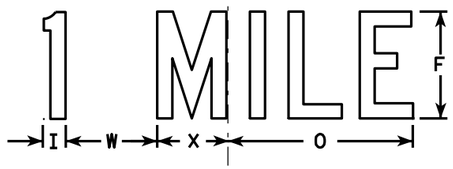

W20-3F

NOTES

1. Sign is Type II - Type F Reflective - reference WIS DOT Standard Specification for HIGHWAY and STRUCTURE CONSTRUCTION latest edition.
2. Color:
   Background - Orange
   Message - Black
3. Message Series - see note 5
4. Corners may be square or rounded when base material is plywood but borders shall be rounded as shown. When base material is metal, the corners and borders shall be rounded.
5. Lines 1 and 2 are Series D.
   Line 3 is Series D for AHEAD and Series C for all other distances.

SIZE	A	B	C	D	E	F	G	H	I	J	K	L	M	N	O	P	Q	R	S	T	U	V	W	X	Y	Z	Area sq. ft.
1	36		1 5/8	5/8	3/4	5	3 3/8	3 1/2	1 1/8	4	8 3/8	8 7/8	12 1/2	11	9	6	10 1/8	2 1/2	1 7/8	5 5/8	8	1 3/8	4 1/2	3 1/2	10 3/4	1 3/4	9.0
2S	48		2 1/4	3/4	1	7	4 1/2	4 3/4	1 1/2	5 1/4	11 3/4	12 1/2	17 1/4	14 5/8	12	8	13 1/2	3 3/8	2 5/8	7 1/2	10 5/8	1 7/8	6	4 5/8	14 3/8	2 3/8	16.0
2M	48		2 1/4	3/4	1	7	4 1/2	4 3/4	1 1/2	5 1/4	11 3/4	12 1/2	17 1/4	14 5/8	12	8	13 1/2	3 3/8	2 5/8	7 1/2	10 5/8	1 7/8	6	4 5/8	14 3/8	2 3/8	16.0
3	48		2 1/4	3/4	1	7	4 1/2	4 3/4	1 1/2	5 1/4	11 3/4	12 1/2	17 1/4	14 5/8	12	8	13 1/2	3 3/8	2 5/8	7 1/2	10 5/8	1 7/8	6	4 5/8	14 3/8	2 3/8	16.0
4	48		2 1/4	3/4	1	7	4 1/2	4 3/4	1 1/2	5 1/4	11 3/4	12 1/2	17 1/4	14 5/8	12	8	13 1/2	3 3/8	2 5/8	7 1/2	10 5/8	1 7/8	6	4 5/8	14 3/8	2 3/8	16.0
5	48		2 1/4	3/4	1	7	4 1/2	4 3/4	1 1/2	5 1/4	11 3/4	12 1/2	17 1/4	14 5/8	12	8	13 1/2	3 3/8	2 5/8	7 1/2	10 5/8	1 7/8	6	4 5/8	14 3/8	2 3/8	16.0

STANDARD SIGN
W20-3A, B, C, D, F & G

WISCONSIN DEPT OF TRANSPORTATION

APPROVED Matthew R Rauch
for State Traffic Engineer
DATE 3/18/11 PLATE NO. W20-3.7

PROJECT NO: | HWY: | COUNTY: | SHEET NO: 300 | E

7

FILE NAME : C:\Users\PROJECTS\tr_stdplate\W203.DGN PLOT DATE : 18-MAR-2011 12:08 PLOT BY : mscj9h PLOT NAME : PLOT SCALE : 9.931739:1.000000
WISDOT/CADDS SHEET 42

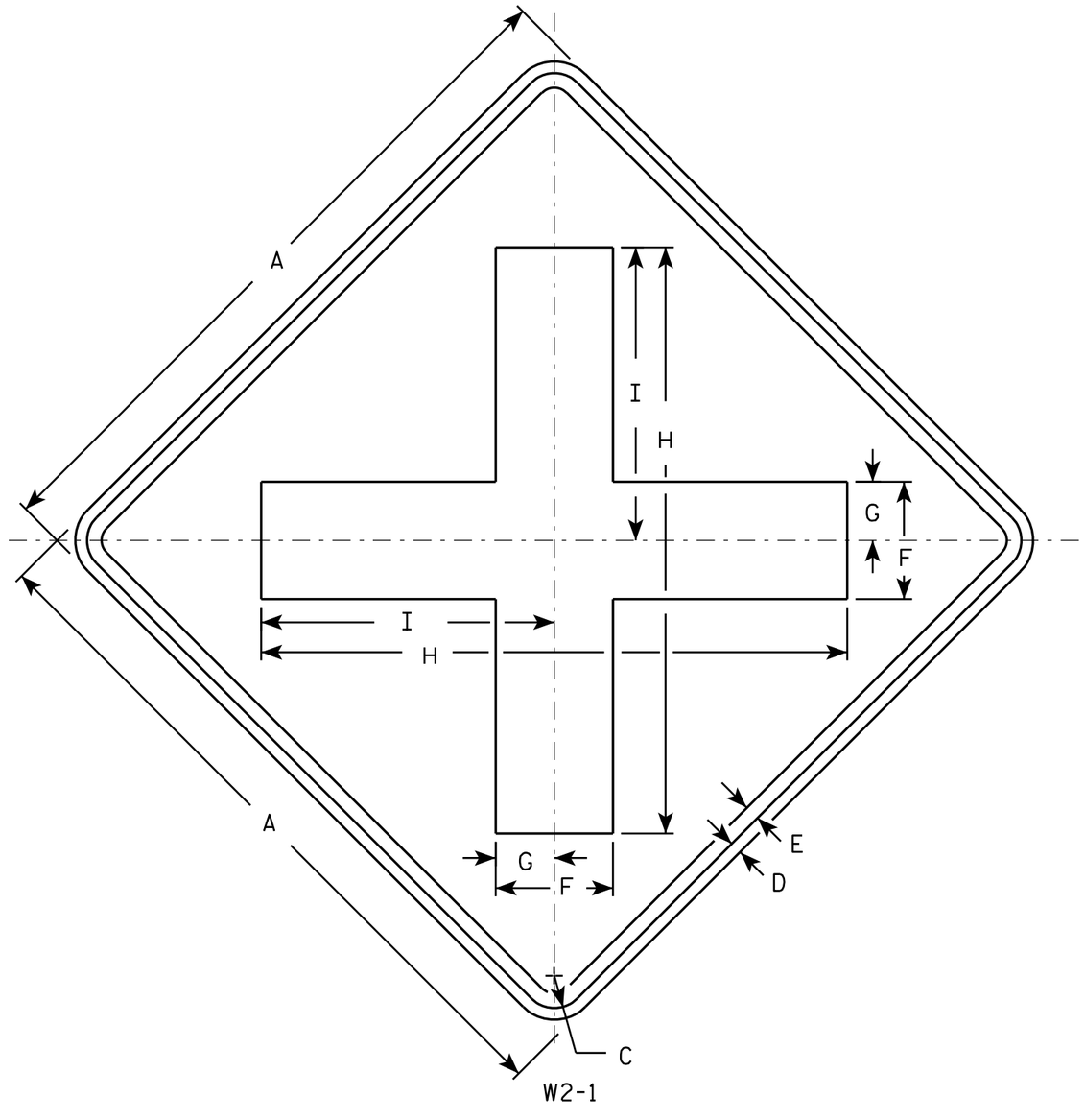

NOTES

1. Sign is Type II - Type F Reflective - reference WIS DOT Standard Specification for HIGHWAY and STRUCTURE CONSTRUCTION latest edition.
2. Color:
   Background - Yellow
   Message - Black
3. Corners may be square or rounded when base material is plywood but borders shall be rounded as shown. When base material is metal, the corners and borders shall be rounded.

SIZE	A	B	C	D	E	F	G	H	I	J	K	L	M	N	O	P	Q	R	S	T	U	V	W	X	Y	Z	Area sq. ft.
1	24		1 1/8	3/8	1/2	4	2	20	10																		4.0
2S	30		1 3/8	1/2	5/8	5	2 1/2	25	12 1/2																		6.25
2M	30		1 3/8	1/2	5/8	5	2 1/2	25	12 1/2																		6.25
3	36		1 5/8	5/8	3/4	6	3	30	15																		9.0
4	48		2 1/4	3/4	1	8	4	40	20																		16.0
5																											

STANDARD SIGN
W2-1

WISCONSIN DEPT OF TRANSPORTATION

APPROVED Matthew R Rauch
for State Traffic Engineer

DATE 5/29/12 PLATE NO. W2-1.9

PROJECT NO:	HWY:	COUNTY:		SHEET NO: 301	E

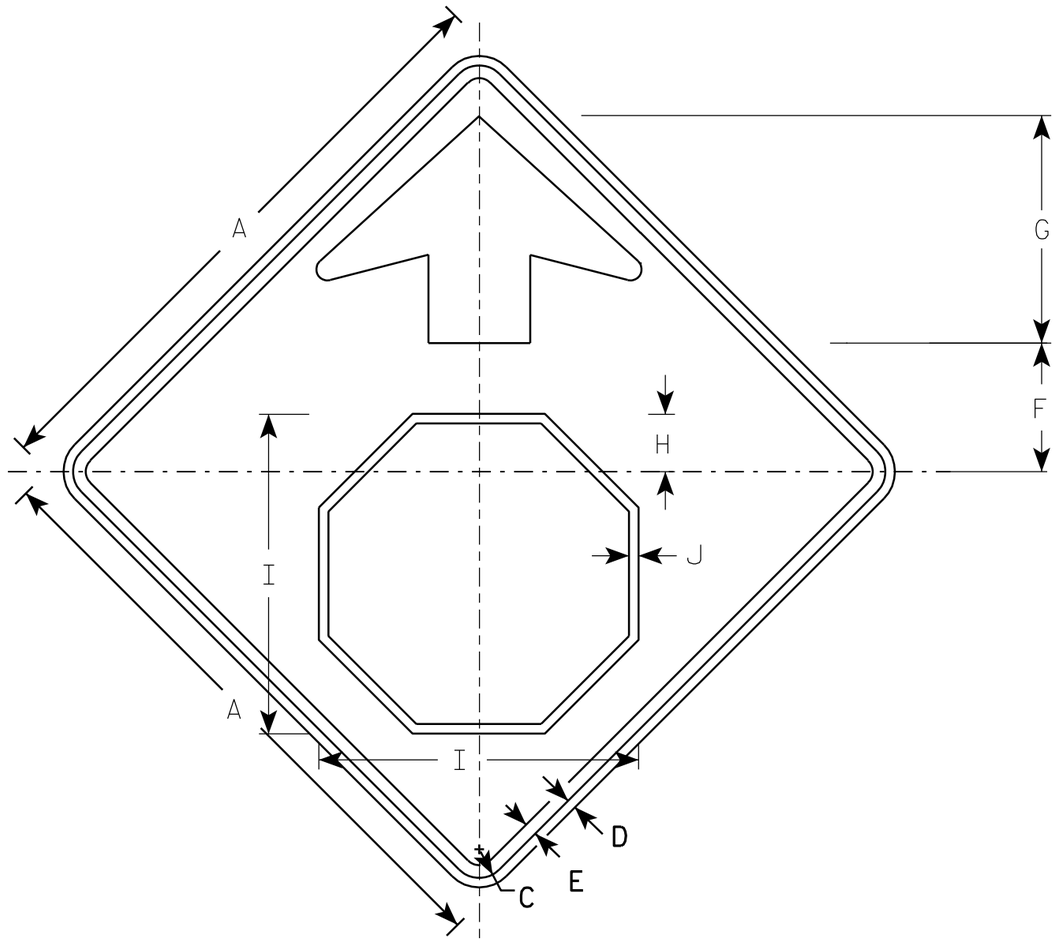

W3-1

NOTES

1. All Signs Type II - Type F Reflective - reference WIS DOT Standard Specification for HIGHWAY and STRUCTURE CONSTRUCTION latest edition.
2. Color:
   Background - YELLOW
   Arrow & Border - BLACK
   Stop Symbol - WHITE BORDER ON RED BACKGROUND

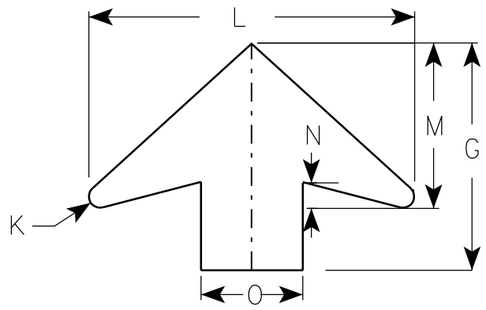

ARROW DETAIL

SIZE	A	B	C	D	E	F	G	H	I	J	K	L	M	N	O	P	Q	R	S	T	U	V	W	X	Y	Z	Area sq. ft.
1	30		1 3/8	1/2	5/8	6 1/4	11 1/4	2 7/8	15 3/4	1/2	1/2	16	8	1 1/4	5												6.25
2S	36		1 5/8	5/8	3/4	7 1/2	13 1/2	3 1/2	19	5/8	5/8	19 1/4	9 3/4	1 5/8	6												9.0
2M	36		1 5/8	5/8	3/4	7 1/2	13 1/2	3 1/2	19	5/8	5/8	19 1/4	9 3/4	1 5/8	6												9.0
3	36		1 5/8	5/8	3/4	7 1/2	13 1/2	3 1/2	19	5/8	5/8	19 1/4	9 3/4	1 5/8	6												9.0
4	48		2 1/4	3/4	1	10	17 7/8	4 1/2	25 1/8	3/4	7/8	25 5/8	13	2	8												16.0
5	48		2 1/4	3/4	1	10	17 7/8	4 1/2	25 1/8	3/4	7/8	25 5/8	13	2	8												16.0

STANDARD SIGN
W3-1

WISCONSIN DEPT OF TRANSPORTATION

APPROVED Matthew R Rauch
for State Traffic Engineer

DATE 6/7/10 PLATE NO. W3-1.12

PROJECT NO:

SHEET NO: 302 E

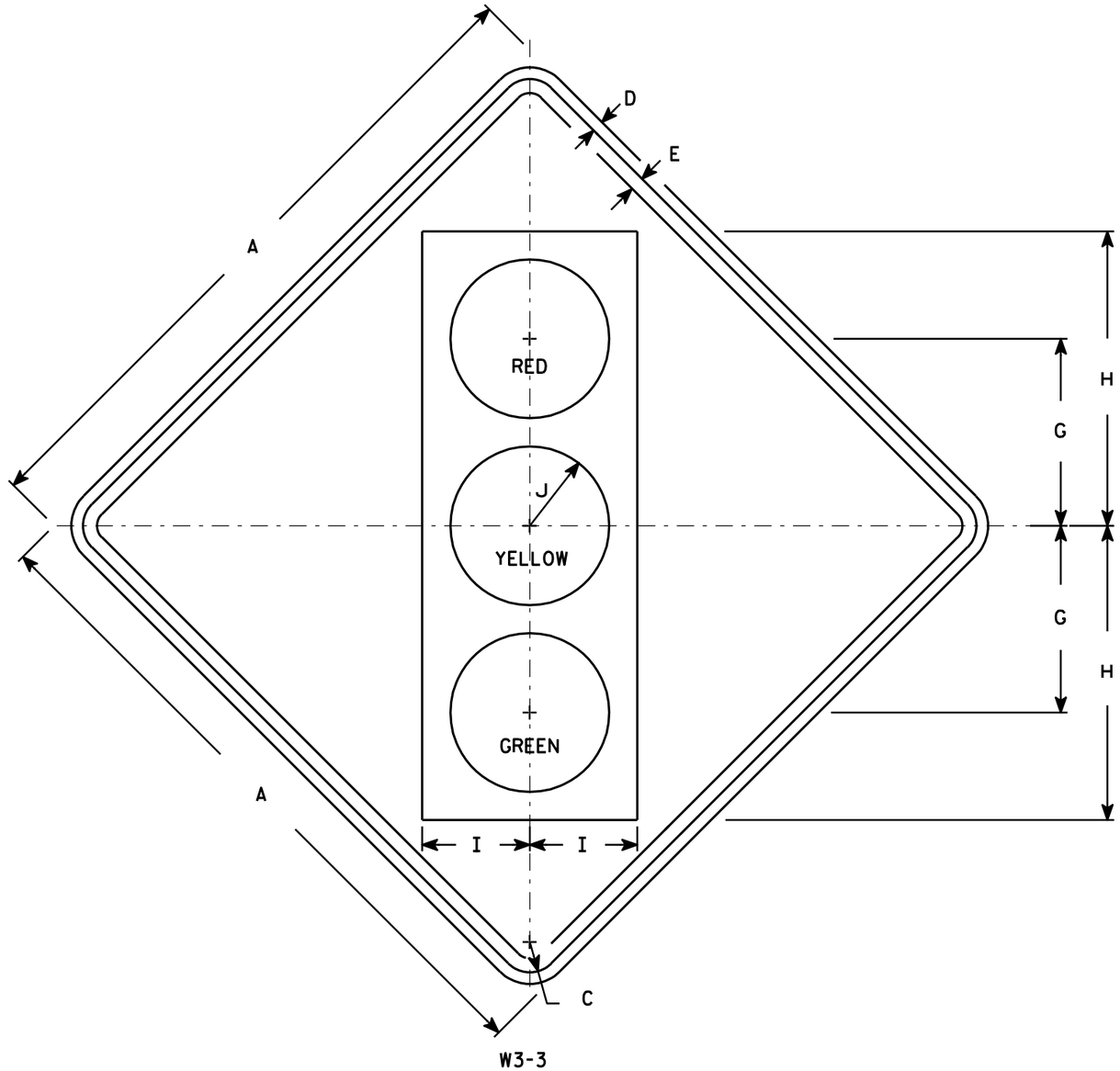

NOTES

1. Sign is Type II - Type F Reflective - reference WIS DOT Standard Specification for HIGHWAY and STRUCTURE CONSTRUCTION latest edition.
2. Color:
   Background - Yellow
   Message - See Note 4
3. Corners may be square or rounded when base material is plywood but borders shall be rounded as shown. When base material is metal, the corners and borders shall be rounded.
4. Symbol and border are non-reflective black.
   Top circle - Type H Reflectorized Red
   Center circle - Same as background
   Bottom circle - Type H Reflectorized Green

SIZE	A	B	C	D	E	F	G	H	I	J	K	L	M	N	O	P	Q	R	S	T	U	V	W	X	Y	Z	Area sq. ft.
1	30		1 3/8	1/2	5/8		8 3/4	13 3/4	5	3 3/4																	6.25
2S	36		1 5/8	5/8	3/4		10	15 3/4	5 3/4	4 1/4																	9.0
2M	36		1 5/8	5/8	3/4		10	15 3/4	5 3/4	4 1/4																	9.0
3	36		1 5/8	5/8	3/4		10	15 3/4	5 3/4	4 1/4																	9.0
4	48		2 1/4	3/4	1		12 1/2	20	7 1/2	5																	16.0
5	48		2 1/4	3/4	1		12 1/2	20	7 1/2	5																	16.0

STANDARD SIGN
W3-3

WISCONSIN DEPT OF TRANSPORTATION

APPROVED Matthew R Rauch for State Traffic Engineer

DATE 6/7/10 PLATE NO. W3-3.11

PROJECT NO: | HWY: | COUNTY: | SHEET NO: 303 | E

7

FILE NAME : C:\Users\PROJECTS\tr_stdplate\W33.DGN PLOT DATE : 07-JUN-2010 13:07 PLOT BY : ditjph PLOT NAME : PLOT SCALE : 7.448805:1.000000

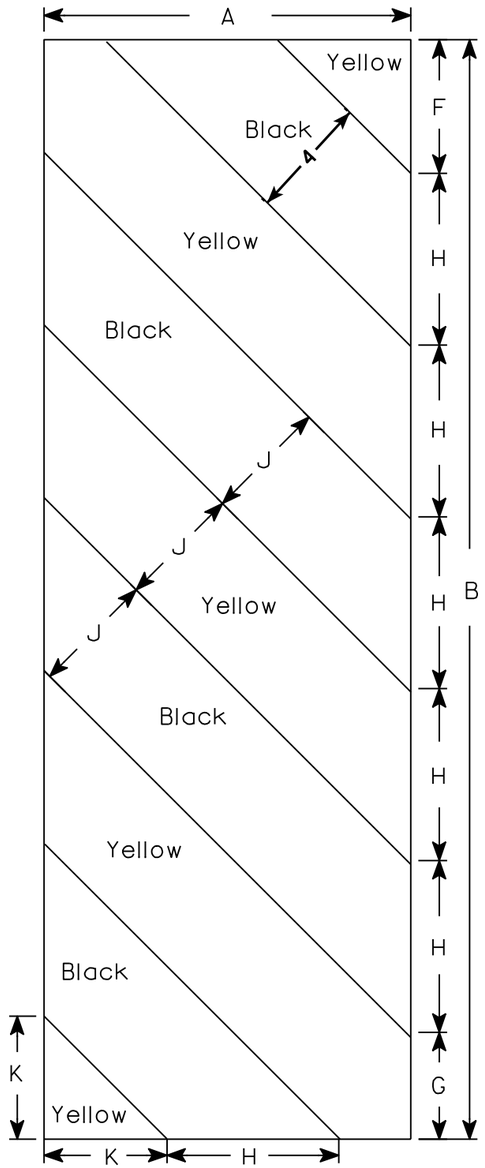

W5-52L

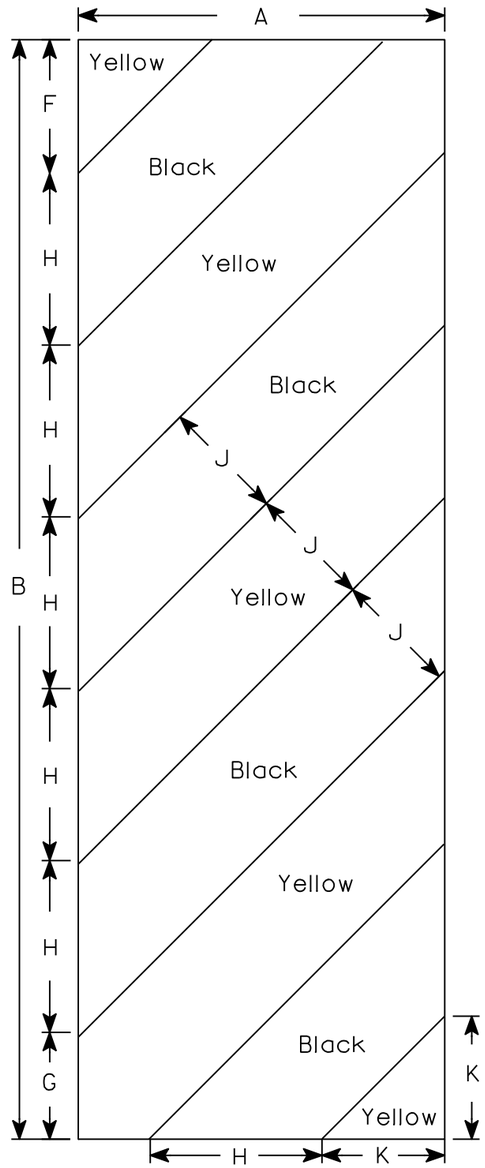

W5-52R

NOTES

1. Sign is Type II - Type F Reflective - reference WIS DOT Standard Specification for HIGHWAY and STRUCTURE CONSTRUCTION latest edition.
2. Color:
   Background - Yellow
   Message - Black
3. Corners may be square or rounded when base material is plywood but borders shall be rounded as shown. When base material is metal, the corners and borders shall be rounded.
4. Alternate colors of stripes as shown.

SIZE	A	B	C	D	E	F	G	H	I	J	K	L	M	N	O	P	Q	R	S	T	U	V	W	X	Y	Z	Area sq. ft.
1																											
2S	12	36				4 3/8	3 1/2	5 5/8	45°	4	4																3.0
2M	12	36				4 3/8	3 1/2	5 5/8	45°	4	4																3.0
3	18	54				6	5 1/2	8 1/2	45°	6	6 9/16																6.75
4																											
5																											

STANDARD SIGN

W5-52L & W5-52R

WISCONSIN DEPT OF TRANSPORTATION

APPROVED Matthew R Rauch
for State Traffic Engineer

DATE 5/29/12 PLATE NO. W5-52.9

PROJECT NO:	HWY:	COUNTY:		SHEET NO: 304	E

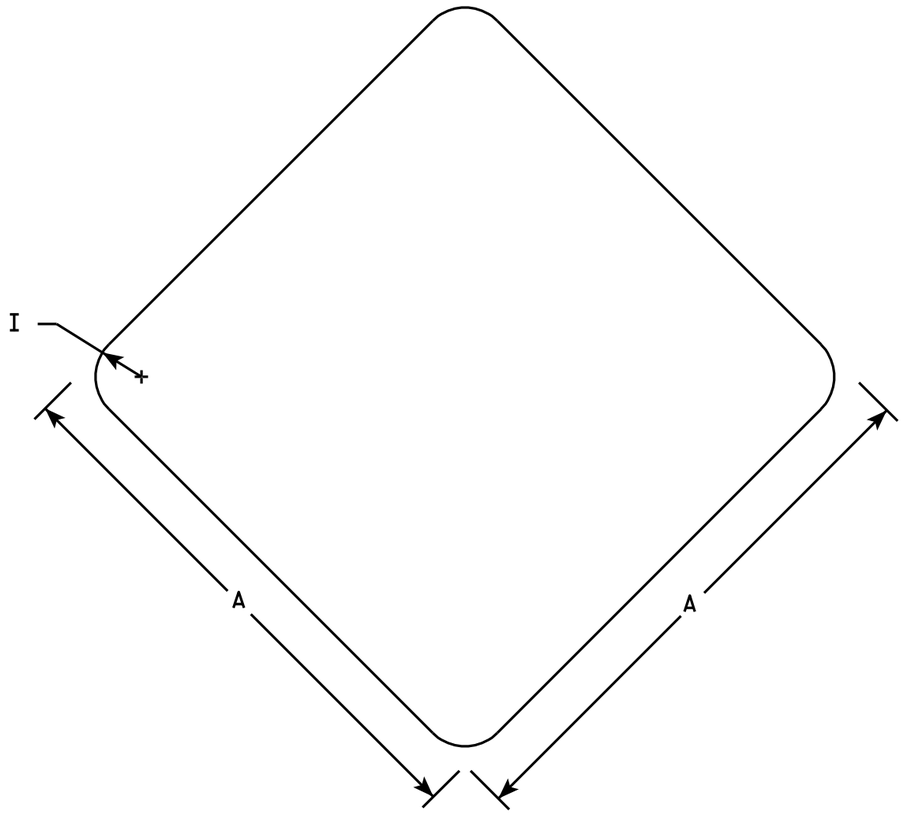

W5-56

NOTES

1. Sign is Type II - Type SH Reflective - reference WIS DOT Standard Specification for HIGHWAY and STRUCTURE CONSTRUCTION latest edition.
2. Color:
   Background - Red
3. Corners may be square or rounded when base material is plywood. When base material is metal the corners shall be rounded.

SIZE	A	B	C	D	E	F	G	H	I	J	K	L	M	N	O	P	Q	R	S	T	U	V	W	X	Y	Z	Area sq. ft.
1	12								1																		1.0
2S	18								1 ½																		2.25
2M	18								1 ½																		2.25
3																											
4																											
5																											

STANDARD SIGN
W5-56

WISCONSIN DEPT OF TRANSPORTATION

APPROVED Matthew R Rauch
for State Traffic Engineer

DATE 11/2/10 PLATE NO. W5-56.6

PROJECT NO:	HWY:	COUNTY:		SHEET NO: 305	E

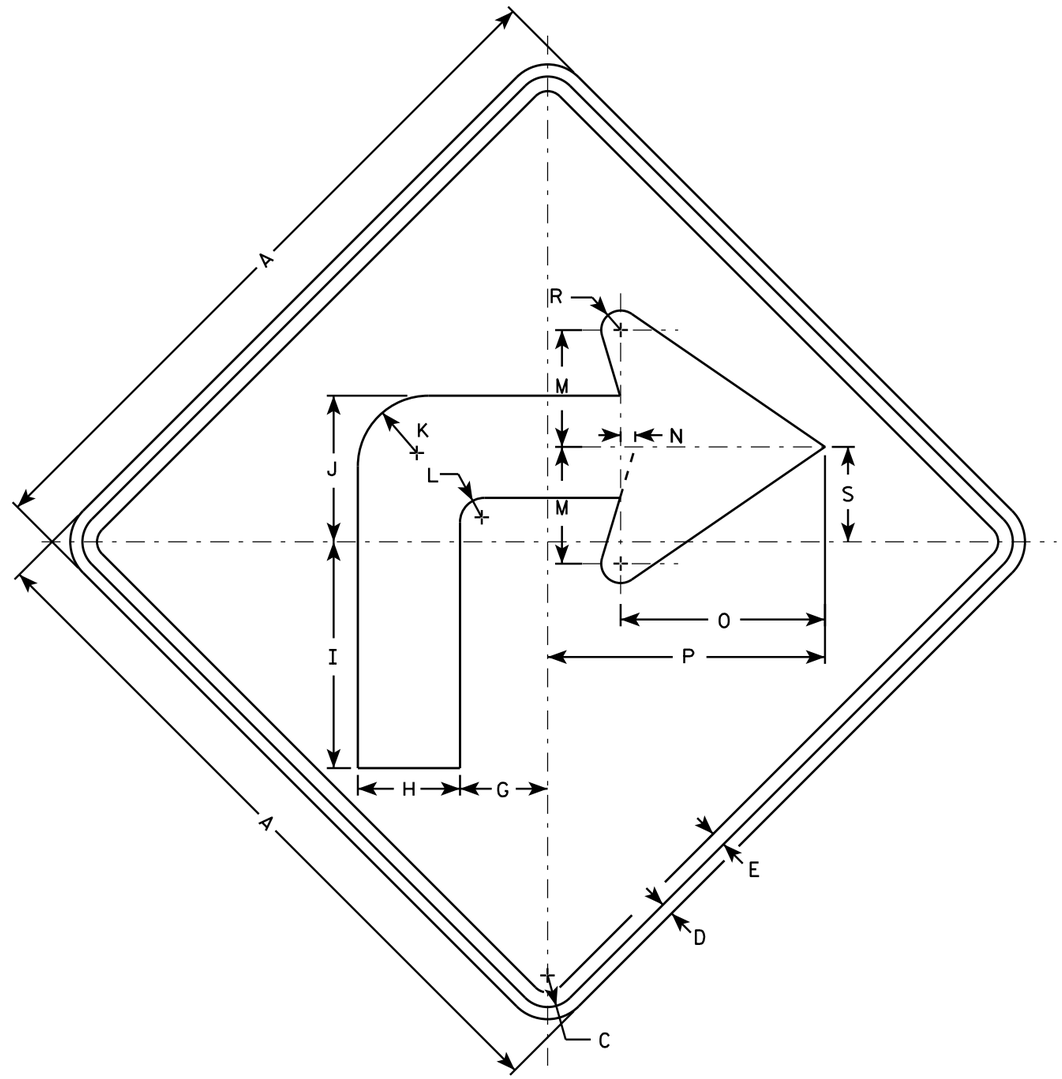

W01-1R

NOTES

1. Sign is Type II - Type F Reflective - reference WIS DOT Standard Specification for HIGHWAY and STRUCTURE CONSTRUCTION latest edition.
2. Color:
   Background - Orange
   Message - Black
3. Corners may be square or rounded when base material is plywood but borders shall be rounded as shown. When base material is metal, the corners and borders shall be rounded.
4. W01-1L is the same as W01-1R except the arrow is reversed along the vertical centerline.

SIZE	A	B	C	D	E	F	G	H	I	J	K	L	M	N	O	P	Q	R	S	T	U	V	W	X	Y	Z	Area sq. ft.
1	36		1 5/8	5/8	3/4		4 1/2	5 1/4	11 5/8	7 1/2	3 5/8	1 1/4	6	3/4	10 1/2	14 1/4		1	4 7/8								9.0
2S	48		2 1/4	3/4	1		6	7	15 1/2	10	4 7/8	1 5/8	8	1	14	19		1 1/4	6 1/2								16.0
2M	48		2 1/4	3/4	1		6	7	15 1/2	10	4 7/8	1 5/8	8	1	14	19		1 1/4	6 1/2								16.0
3	48		2 1/4	3/4	1		6	7	15 1/2	10	4 7/8	1 5/8	8	1	14	19		1 1/4	6 1/2								16.0
4	48		2 1/4	3/4	1		6	7	15 1/2	10	4 7/8	1 5/8	8	1	14	19		1 1/4	6 1/2								16.0
5	48		2 1/4	3/4	1		6	7	15 1/2	10	4 7/8	1 5/8	8	1	14	19		1 1/4	6 1/2								16.0

STANDARD SIGN
W01-1

WISCONSIN DEPT OF TRANSPORTATION

APPROVED Matthew R Rauch
for State Traffic Engineer

DATE 11/18/13 PLATE NO. W01-1.1

PROJECT NO: | HWY: | COUNTY: | SHEET NO: E

FILE NAME : C:\CAEfiles\Projects\tr_stdplate\W011.DGN PLOT DATE : 28-FEB-2014 11:34 PLOT BY : mscj9h PLOT NAME : PLOT SCALE : 7.783368:1.000000 WISDOT/CADDS SHEET 42

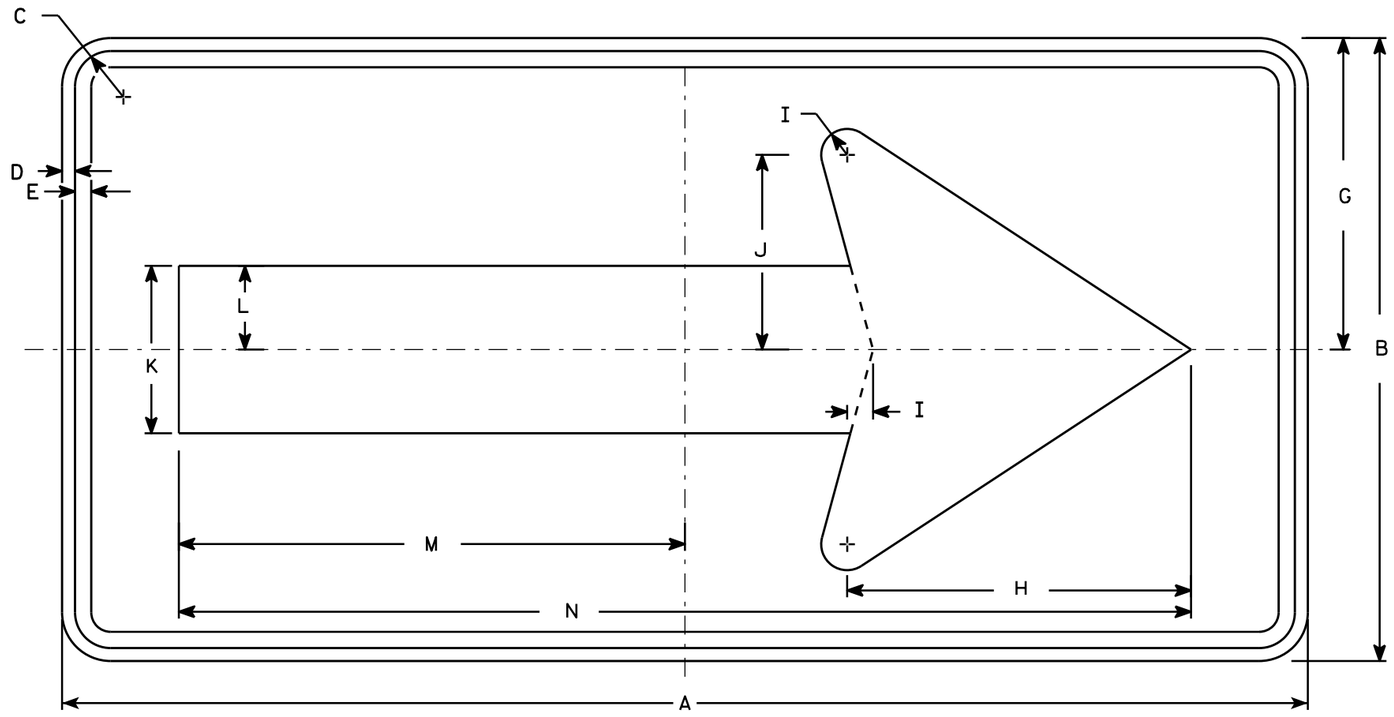

W01-6

NOTES

1. Sign is Type II - Type F Reflective - reference WIS DOT Standard Specification for HIGHWAY and STRUCTURE CONSTRUCTION latest edition.
2. Color:
   Background - Orange
   Message - Black
3. Corners may be square or rounded when base material is plywood but borders shall be rounded as shown. When base material is metal, the corners and borders shall be rounded.

SIZE	A	B	C	D	E	F	G	H	I	J	K	L	M	N	O	P	Q	R	S	T	U	V	W	X	Y	Z	Area sq. ft.
1																											
2S	48	24	1 3/8	1/2	5/8		12	13 1/4	1	7 1/2	6 1/2	3 1/4	19 1/2	39													8.0
2M	48	24	1 3/8	1/2	5/8		12	13 1/4	1	7 1/2	6 1/2	3 1/4	19 1/2	39													8.0
3	60	30	1 3/8	1/2	5/8		15	16 1/4	1 1/4	9 1/4	8	4	24 3/8	48 3/4													12.5
4	60	30	1 3/8	1/2	5/8		15	16 1/4	1 1/4	9 1/4	8	4	24 3/8	48 3/4													12.5
5	60	30	1 3/8	1/2	5/8		15	16 1/4	1 1/4	9 1/4	8	4	24 3/8	48 3/4													12.5

STANDARD SIGN
W01-6

WISCONSIN DEPT OF TRANSPORTATION

APPROVED Matthew R Rauch
for State Traffic Engineer

DATE 11/18/13 PLATE NO. W01-6.1

PROJECT NO:	HWY:	COUNTY:		SHEET NO:	E

FILE NAME : C:\CAEfiles\Projects\tr_stdplate\W016.DGN PLOT DATE : 28-FEB-2014 11:37 PLOT BY : mscj9h PLOT NAME : PLOT SCALE : 5.837526:1.000000 WISDOT/CADDS SHEET 42

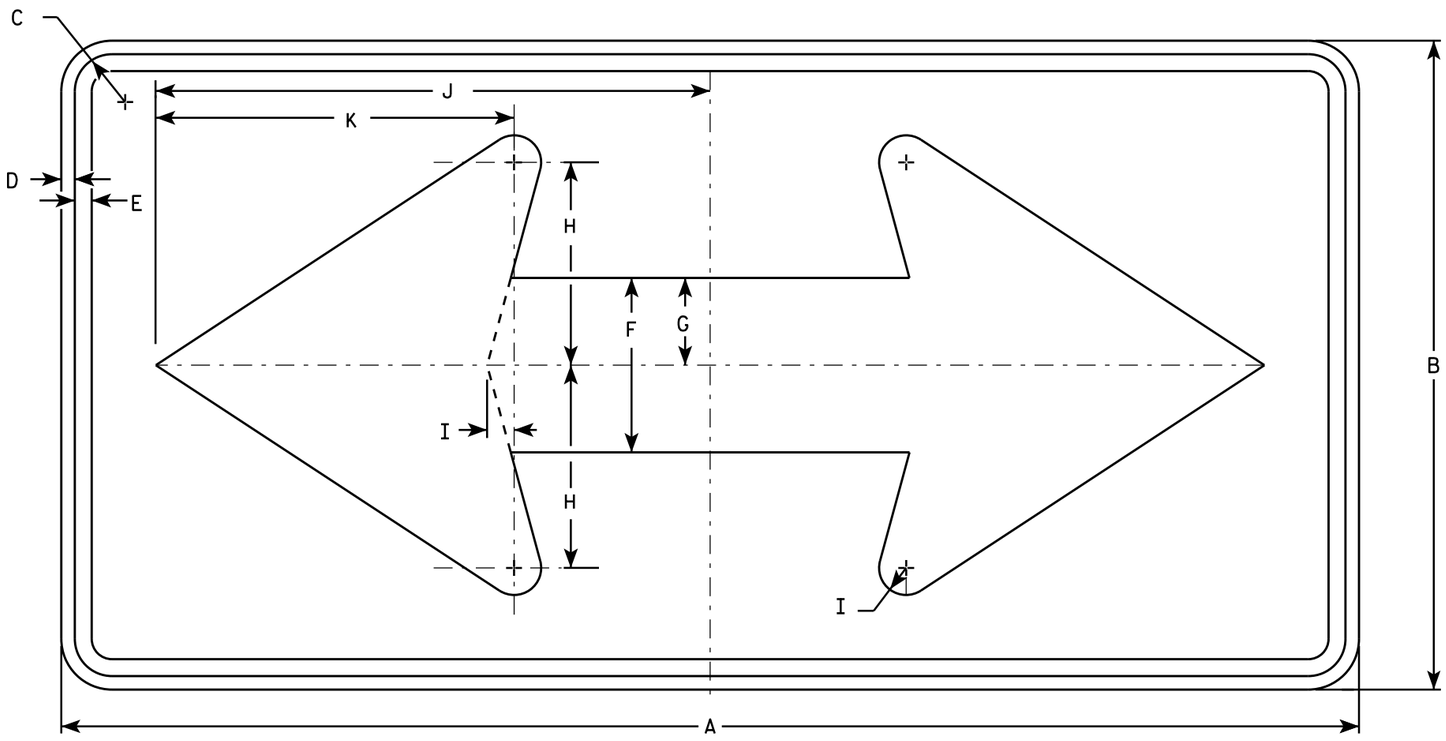

W01-7

NOTES

1. Sign is Type II - Type F Reflective - reference WIS DOT Standard Specification for HIGHWAY and STRUCTURE CONSTRUCTION latest edition.
2. Color:
   Background - Orange
   Message - Black
3. Corners may be square or rounded when base material is plywood but borders shall be rounded as shown. When base material is metal, the corners and borders shall be rounded.

SIZE	A	B	C	D	E	F	G	H	I	J	K	L	M	N	O	P	Q	R	S	T	U	V	W	X	Y	Z	Area sq. ft.
1																											
2S	48	24	1 3/8	1/2	5/8	6 1/2	3 1/4	7 1/2	1	20 1/2	13 1/4																8.0
2M	48	24	1 3/8	1/2	5/8	6 1/2	3 1/4	7 1/2	1	20 1/2	13 1/4																8.0
3	60	30	1 3/8	1/2	5/8	8	4	9 1/4	1 1/4	25 3/8	16 1/4																12.5
4	60	30	1 3/8	1/2	5/8	8	4	9 1/4	1 1/4	25 3/8	16 1/4																12.5
5	60	30	1 3/8	1/2	5/8	8	4	9 1/4	1 1/4	25 3/8	16 1/4																12.5

STANDARD SIGN
W01-7

WISCONSIN DEPT OF TRANSPORTATION

APPROVED Matthew R Rauch
For State Traffic Engineer

DATE 11/18/13 PLATE NO. W01-7.1

PROJECT NO: | HWY: | COUNTY: | SHEET NO: E

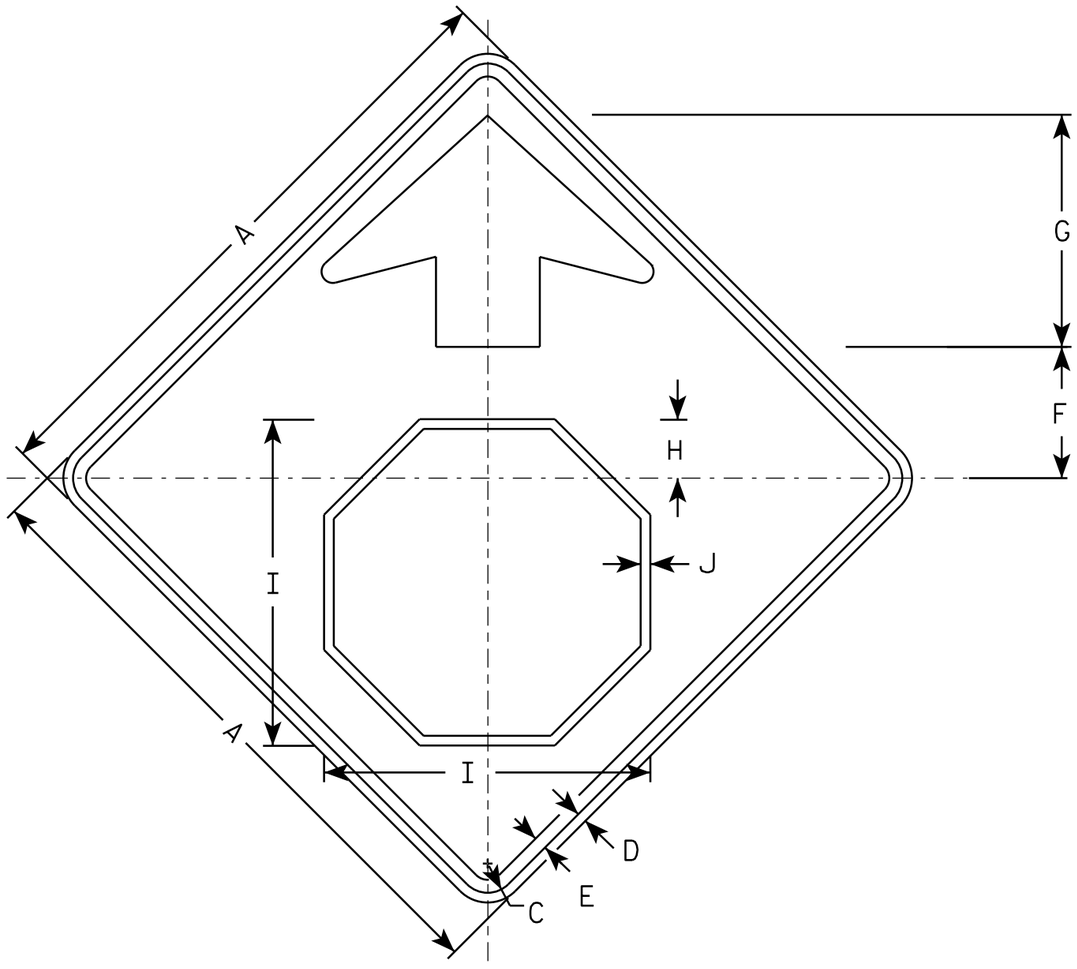

W03-1

NOTES

1. All Signs Type II - Type F Reflective - reference WIS DOT Standard Specification for HIGHWAY and STRUCTURE CONSTRUCTION latest edition.
2. Color:
   Background - ORANGE
   Arrow & Border - BLACK
   Stop Symbol - WHITE BORDER ON RED BACKGROUND

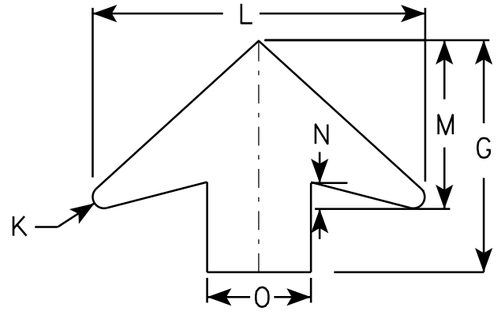

ARROW DETAIL

SIZE	A	B	C	D	E	F	G	H	I	J	K	L	M	N	O	P	Q	R	S	T	U	V	W	X	Y	Z	Area sq. ft.
1	36		1 5/8	5/8	3/4	7 1/2	13 1/2	3 1/2	19	5/8	5/8	19 1/4	9 3/4	1 5/8	6												9.0
2S	48		2 1/4	3/4	1	10	17 7/8	4 1/2	25 1/8	3/4	7/8	25 5/8	13	2	8												16.0
2M	48		2 1/4	3/4	1	10	17 7/8	4 1/2	25 1/8	3/4	7/8	25 5/8	13	2	8												16.0
3	48		2 1/4	3/4	1	10	17 7/8	4 1/2	25 1/8	3/4	7/8	25 5/8	13	2	8												16.0
4	48		2 1/4	3/4	1	10	17 7/8	4 1/2	25 1/8	3/4	7/8	25 5/8	13	2	8												16.0
5	48		2 1/4	3/4	1	10	17 7/8	4 1/2	25 1/8	3/4	7/8	25 5/8	13	2	8												16.0

STANDARD SIGN
W03-1

WISCONSIN DEPT OF TRANSPORTATION

APPROVED Matthew R Rauch
for State Traffic Engineer

DATE 11/20/13 PLATE NO. W03-1.1

PROJECT NO: | SHEET NO: E

FILE NAME : C:\CAEFiles\Projects\tr_stdplate\W031.DGN PLOT DATE : 20-NOV-2013 10:54 PLOT BY : mscsja

WISDOT/CADDS SHEET 42

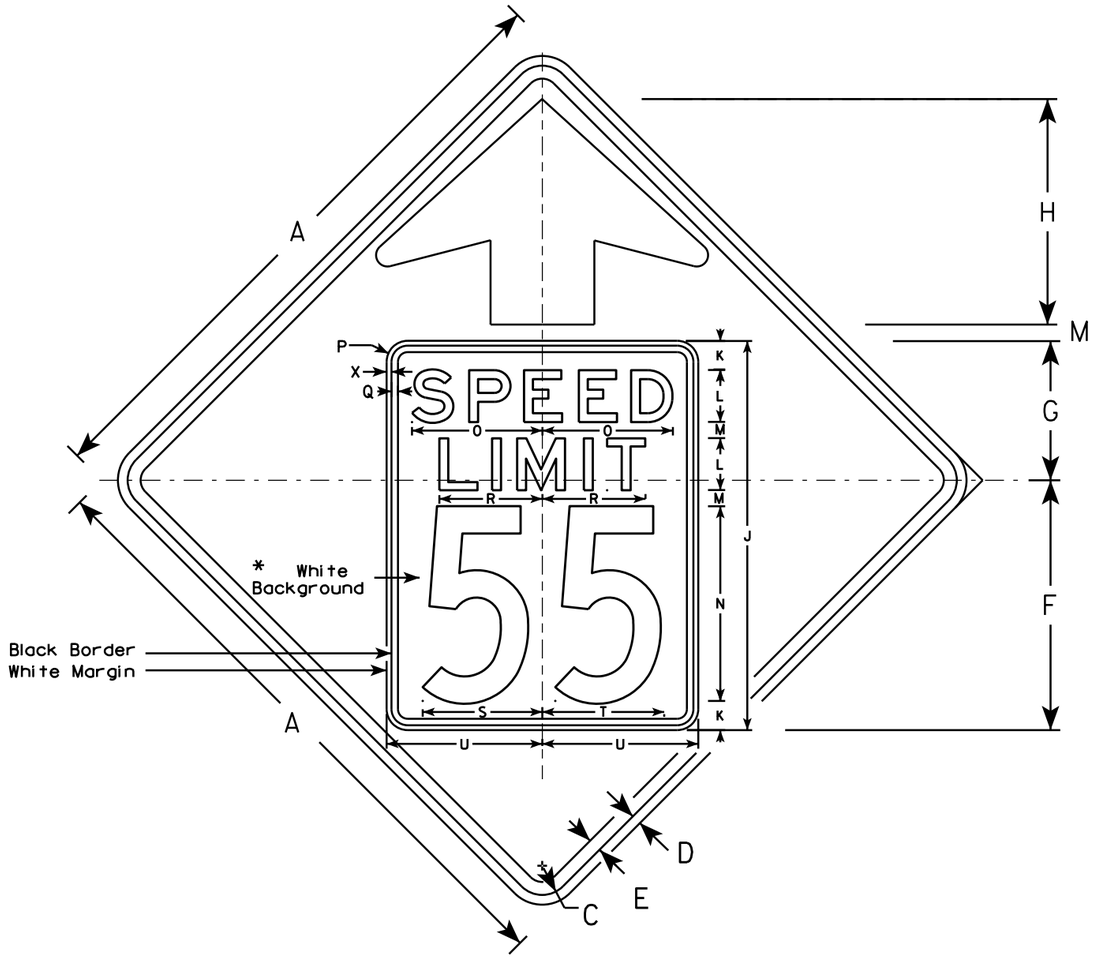

W03-5

NOTES

1. Sign is Type II - Type F Reflective - reference WIS DOT Standard Specification for HIGHWAY and STRUCTURE CONSTRUCTION latest edition.
2. Color: *
   Background - ORANGE*
   Message - BLACK
3. Message Series - C for numbers Series E for wording
4. Substitute appropriate numerals and optically adjust spacing to achieve proper balance

*Speed Limit Sign shall have a White Background

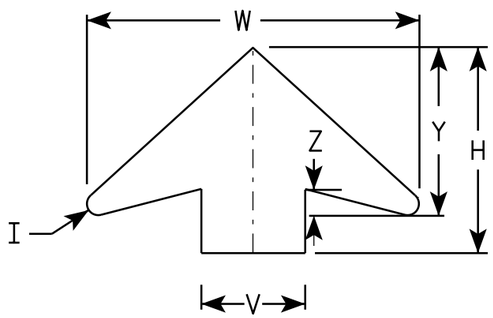

ARROW DETAIL

SIZE	A	B	C	D	E	F	G	H	I	J	K	L	M	N	O	P	Q	R	S	T	U	V	W	X	Y	Z	Area sq. ft.
1	36		1 5/8	5/8	3/4	14 1/2	9 1/2	11 1/2	5/8	24	2	3	1	12	7 1/8	1 1/2	3/8	5 3/4	7 1/4	7 1/8	9	6	19 1/4	3/8	9 3/4	1 5/8	9.0
2S	48		2 1/4	3/4	1	19 1/4	10 3/4	17 3/8	7/8	30	2 1/4	4	1 1/4	15	10	1 5/8	1/2	8	9 1/4	9 3/8	12	8	25 5/8	3/8	13	2	16.0
2M	48		2 1/4	3/4	1	19 1/4	10 3/4	17 3/8	7/8	30	2 1/4	4	1 1/4	15	10	1 5/8	1/2	8	9 1/4	9 3/8	12	8	25 5/8	3/8	13	2	16.0
3	48		2 1/4	3/4	1	19 1/4	10 3/4	17 3/8	7/8	30	2 1/4	4	1 1/4	15	10	1 5/8	1/2	8	9 1/4	9 3/8	12	8	25 5/8	3/8	13	2	16.0
4	48		2 1/4	3/4	1	19 1/4	10 3/4	17 3/8	7/8	30	2 1/4	4	1 1/4	15	10	1 5/8	1/2	8	9 1/4	9 3/8	12	8	25 5/8	3/8	13	2	16.0
5	48		2 1/4	3/4	1	19 1/4	10 3/4	17 3/8	7/8	30	2 1/4	4	1 1/4	15	10	1 5/8	1/2	8	9 1/4	9 3/8	12	8	25 5/8	3/8	13	2	16.0

STANDARD SIGN
W03-5

WISCONSIN DEPT OF TRANSPORTATION

APPROVED Matthew R Rauch
for State Traffic Engineer

DATE 11/20/13 PLATE NO. W03-5.1

PROJECT NO: SHEET NO: E

FILE NAME : C:\CAEFiles\Projects\tr_stdplate\W035.DGN PLOT DATE : 20-NOV-2013 11:32 PLOT BY : mscsja

WISDOT/CADDS SHEET 42

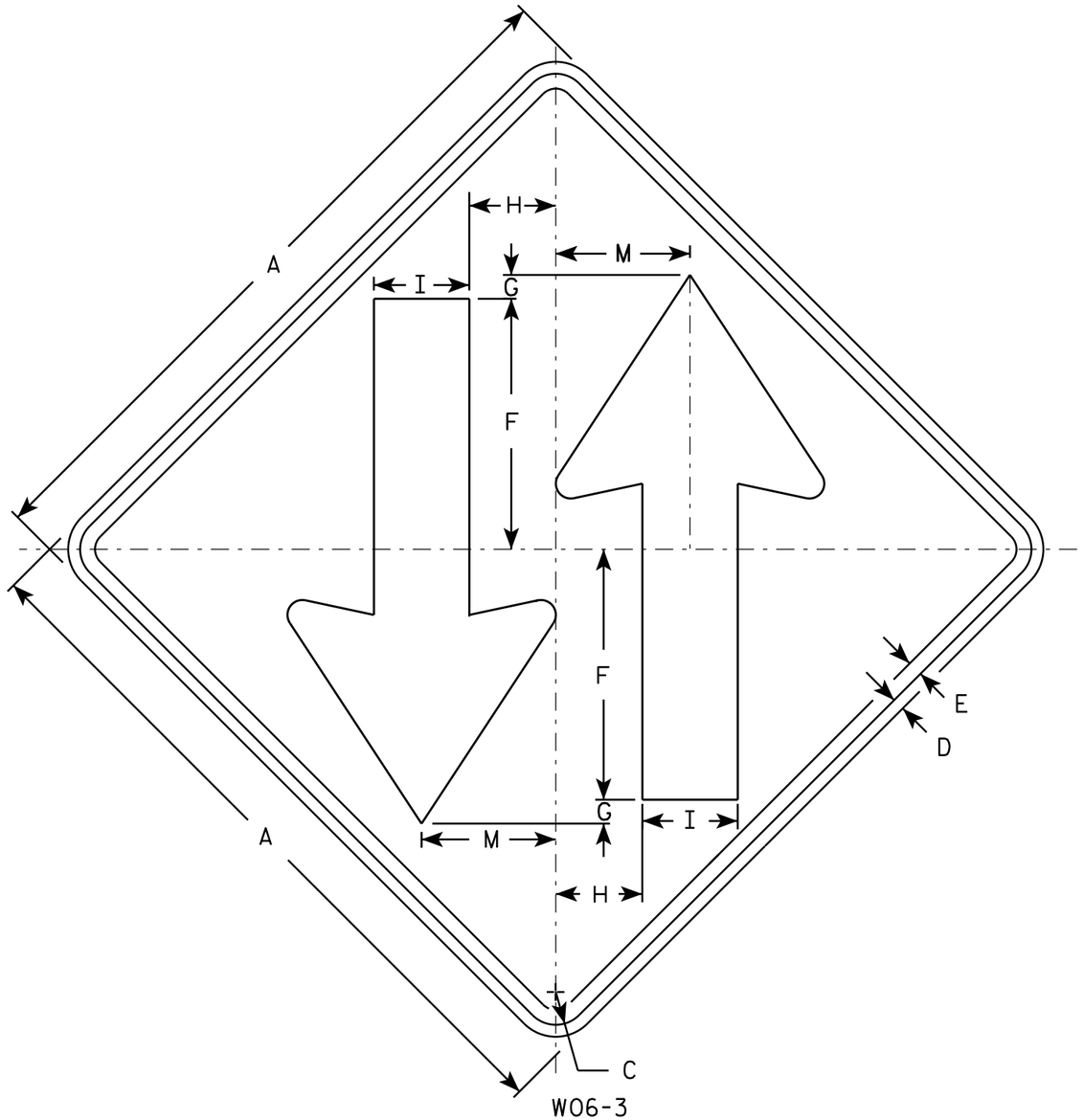

W06-3

NOTES

1. Sign is Type II - Type F Reflective - reference WIS DOT Standard Specification for HIGHWAY and STRUCTURE CONSTRUCTION latest edition.
2. Color:
   Background - Orange
   Message - Black
3. Corners may be square or rounded when base material is plywood but borders shall be rounded as shown. When base material is metal, the corners and borders shall be rounded.

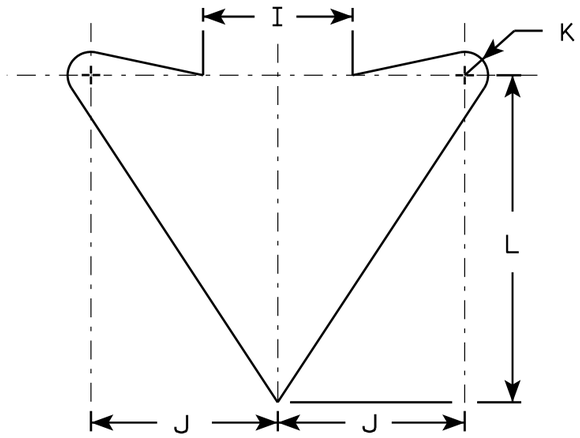

ARROW DETAIL

SIZE	A	B	C	D	E	F	G	H	I	J	K	L	M	N	O	P	Q	R	S	T	U	V	W	X	Y	Z	Area sq. ft.
1	36		1 5/8	5/8	3/4	12	1	4 1/4	5	6	3/4	10 1/2	6 3/4														9.0
2S	48		2 1/4	3/4	1	15 1/2	1	6	6	8	1	14	9														16.0
2M	48		2 1/4	3/4	1	15 1/2	1	6	6	8	1	14	9														16.0
3	48		2 1/4	3/4	1	15 1/2	1	6	6	8	1	14	9														16.0
4	48		2 1/4	3/4	1	15 1/2	1	6	6	8	1	14	9														16.0
5	48		2 1/4	3/4	1	15 1/2	1	6	6	8	1	14	9														16.0

STANDARD SIGN
W06-3

WISCONSIN DEPT OF TRANSPORTATION

APPROVED Matthew R Rauch
for State Traffic Engineer

DATE 11/20/13 PLATE NO. W06-3.1

PROJECT NO: | HWY: | COUNTY: | SHEET NO: E

FILE NAME : C:\CAEFiles\Projects\tr_stdplate\W063.DGN PLOT DATE : 20-NOV-2013 12:14 PLOT BY : mscsja PLOT NAME : PLOT SCALE : 6.080757:1.000000

WISDOT/CADDS SHEET 42

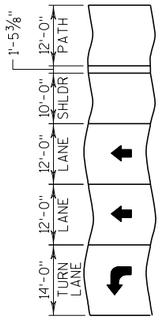

HORIZONTAL CURVE DATA

PI STA = 39+32.75'EB'
X = 229817.827
Y = 2553886.585
DELTA = 4°36'28"
D = 0°45'14"
T = 305.76'
L = 611.19'
R = 7600.00'
PC STA = 36+26.99'EB'
PT STA = 42+38.18'EB'
SE = NC

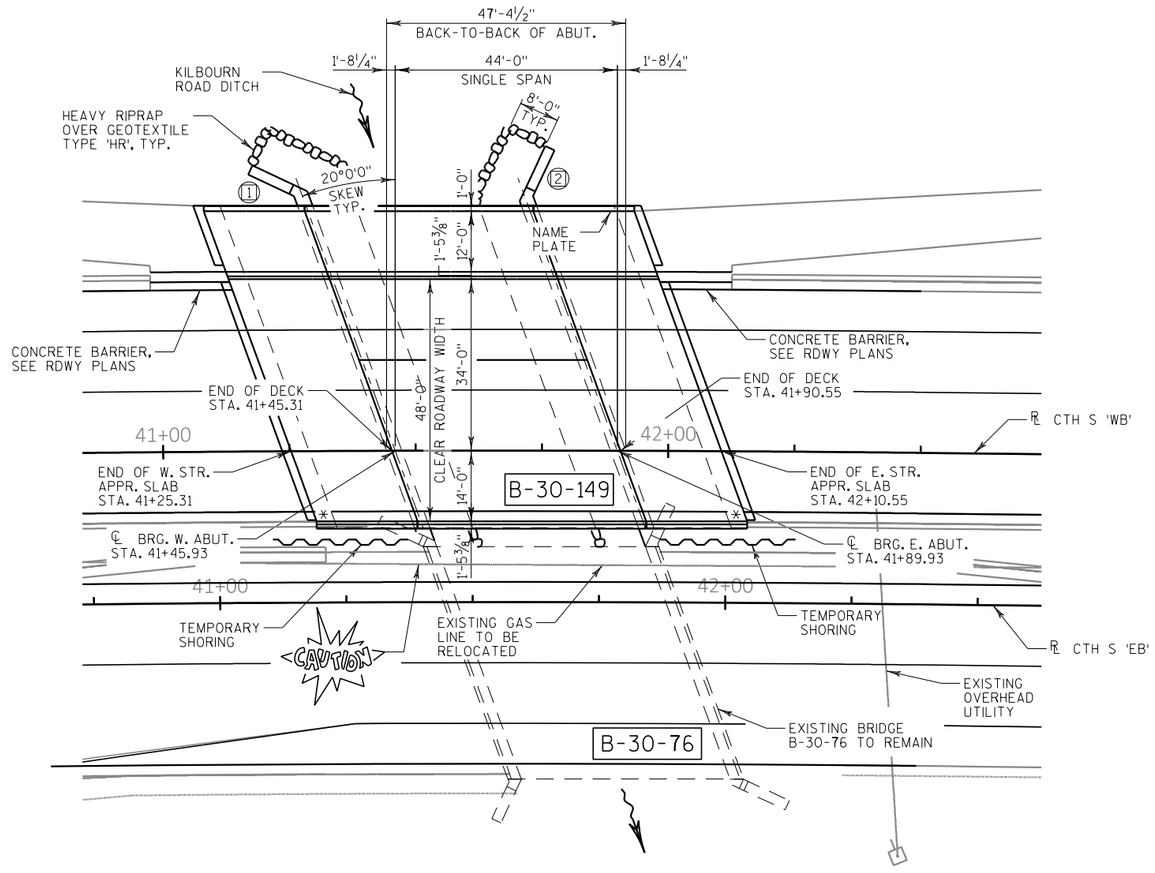

PLAN

(SINGLE SPAN CONCRETE FLAT SLAB)

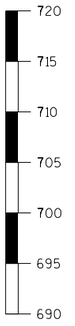

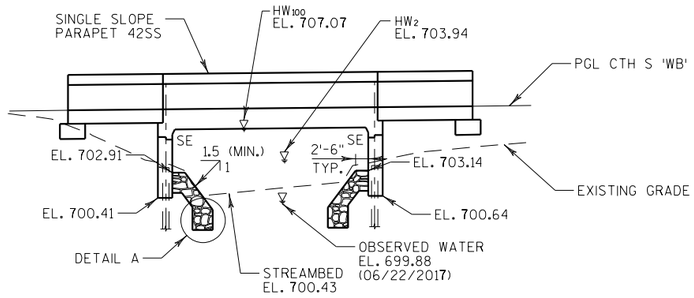

ELEVATION

(NORMAL TO KILBOURN ROAD DITCH)

BENCH MARK

(THE STATION LISTED REFERENCES CTH S 'WB')

NO.	STATION	DESCRIPTION	ELEVATION
BM 1	41+69.70 66.44' RT	B-30-76 MONUMENT, SW WING	708.76

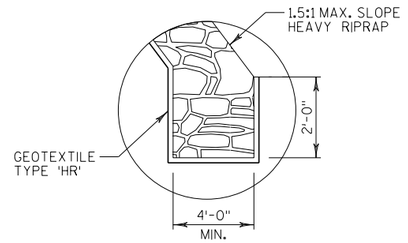

DETAIL A

LIST OF DRAWINGS

1. GENERAL PLAN
2. SECTION, NOTES AND QUANTITIES
3. WEST ABUTMENT
4. WEST ABUTMENT DETAILS
5. EAST ABUTMENT
6. EAST ABUTMENT DETAILS
7. ABUTMENT REINFORCEMENT
8. ALTERNATE CONSTRUCTION JOINT
9. SUPERSTRUCTURE
10. SUPERSTRUCTURE SECTION
11. SUPERSTRUCTURE REINFORCEMENT
12. WEST STRUCTURAL APPROACH SLAB
13. EAST STRUCTRUAL APPROACH SLAB
14. STRUCTURAL APPROACH SLAB REINFORCEMENT
15. SINGLE SLOPE PARAPET TYPE 42SS
16. VERTICAL FACE PARAPET TYPE A
17. FENCING DETAILS
18. SUBSURFACE EXPLORATION

DESIGN DATA

LIVE LOAD:

DESIGN LOADING:	HL-93
INVENTORY RATING FACTOR:	RF = 1.25
OPERATING RATING FACTOR:	RF = 1.62
WISCONSIN STANDARD PERMIT VEHICLE (WIS-SPV):	250 KIPS

STRUCTURE IS DESIGNED FOR A FUTURE WEARING SURFACE OF 20 POUNDS PER SQUARE FOOT.

MATERIAL PROPERTIES:

CONCRETE MASONRY
SLAB, PARAPETS,
& STR. APPR. SLABS ——— f'c = 4,000 P.S.I
ALL OTHER (INCL. STR. APPR. SLAB FTGS.) — f'c = 3,500 P.S.I.

HIGH STRENGTH BAR STEEL REINFORCEMENT ——— fy = 60,000 P.S.I.
(INCLUDES STAINLESS STEEL BAR STEEL REINFORCEMENT)

FOUNDATION DATA

ABUTMENTS TO BE SUPPORTED ON HP10X42 STEEL PILING WITH A REQUIRED DRIVING RESISTANCE OF 180 TONS ◮ PER PILE AS DETERMINED BY THE MODIFIED GATES DYNAMIC FORMULA. ESTIMATED 70'-0" LONG AT THE WEST ABUTMENT AND 65'-0" LONG AT THE EAST ABUTMENT.

ALLOWABLE SOIL BEARING PRESSURE
(STRUCTURAL APPROACH SLABS) ——— 2,000 P.S.F.

HYDRAULIC DATA

100 YEAR FREQUENCY
Q_{100} = 1,370 C.F.S.
VELOCITY = 2.99 F.P.S
HW_{100} = EL. 707.07
WATERWAY AREA = 216.1 SQ. FT.
DRAINAGE AREA = 15.6 SQ. MI.
ROADWAY OVERTOPPING = N/A
SCOUR CRITICAL CODE = 5

2 YEAR FREQUENCY
Q_2 = 297 C.F.S.
VELOCITY = 3.01 F.P.S.
HW_2 = EL. 703.94

TRAFFIC VOLUME

CTH S
A.D.T. = 18,710 (2019)
A.D.T. = 20,510 (2039)
R.D.S. = 50 M.P.H.

LEGEND

⬡ INDICATES WING NUMBER

◮ THE FACTORED AXIAL RESISTANCE OF PILES IN COMPRESSION USED FOR DESIGN IS THE REQUIRED DRIVING RESISTANCE MULTIPLED BY A RESISTANCE FACTOR OF 0.5 USING MODIFIED GATES TO DETERMINE DRIVEN PILE CAPACITY.

* PROVIDE FOR THRIE BEAM GUARD RAIL ATTACHMENT.

WISCONSIN
SCOTT J. GINAL
E-38680
PORT WASHINGTON, WI
PROFESSIONAL ENGINEER
5/5/2020

DESIGN CONTACT:
SCOTT GINAL
(262)-317-3344

NO.	DATE	REVISION	BY

raSmith
CREATIVITY BEYOND ENGINEERING
16745 W. Bluemound Road
Brookfield, WI 53005-5938
(262) 781-1000
rasmith.com

STRUCTURE B-30-149

CTH S WB OVER KILBOURN ROAD DITCH

COUNTY	VILLAGE
KENOSHA	SOMERS

DESIGN SPEC.
AASHTO LRFD BRIDGE DESIGN SPECIFICATIONS

DESIGNED BY	DESIGN CK'D.	DRAWN BY	PLANS CK'D.
PFP	SJG	PFP	SJG

GENERAL PLAN

SHEET 1 OF 18
312

8

8

TOTAL ESTIMATED QUANTITIES

BID ITEM NUMBER	BID ITEMS	UNIT	W. STR. APPR. SLAB	W. ABUT	E. ABUT.	E. STR. APPR. SLAB	SUPER.	TOTALS
203.0200	REMOVING OLD STRUCTURE STATION 41+68	LS						1
206.1000	EXCAVATION FOR STRUCTURES BRIDGES B-30-149	LS						1
210.1500	BACKFILL STRUCTURE TYPE A	TON		201	212			413
305.0120	BASE AGGREGATE DENSE 1 1/4-INCH	TON	200			200		400
502.0100	CONCRETE MASONRY BRIDGES	CY	89	48	48	89	247	521
502.3200	PROTECTIVE SURFACE TREATMENT	SY	134			134	337	605
502.3210	PIGMENTED SURFACE SEALER	SY	36			36	81	153
502.4206	ADHESIVE ANCHORS NO. 6 BAR	EACH		12	12			24
505.0400	BAR STEEL REINFORCEMENT HS STRUCTURES	LB		4810	4820			9630
505.0600	BAR STEEL REINFORCEMENT HS COATED STRUCTURES	LB	15,460	900	910	15,460	42,350	75,080
505.0800.S	BAR STEEL REINFORCEMENT HS STAINLESS STRUCTURES	LB					590	590
511.1200	TEMPORARY SHORING B-30-149	SF		153	153			306
516.0500	RUBBERIZED MEMBRANE WATERPROOFING	SY		15	15			30
550.1100	PILING STEEL HP 10-INCH X 42-LB	LF		770	715			1485
606.0300	RIPRAP HEAVY	CY		68	68			136
612.0406	PIPE UNDERDRAIN WRAPPED 6-INCH	LF		105	105			210
614.0150	ANCHOR ASSEMBLIES FOR STEEL PLATE BEAM GUARD	EACH	1			1		2
616.0206	FENCE CHAIN LINK 6-FT	LF	20			20	46	86
645.0111	GEOTEXTILE TYPE DF SCHEDULE A	SY		60	60			120
645.0120	GEOTEXTILE TYPE HR	SY		128	128			256
SPV.0195.01	SELECT CRUSHED MATERIAL FOR TRAVEL CORRIDOR	TON		16	16			32
	NON-BID ITEMS							
	FILLER	SIZE						1/2", 3/4", 1 1/2"

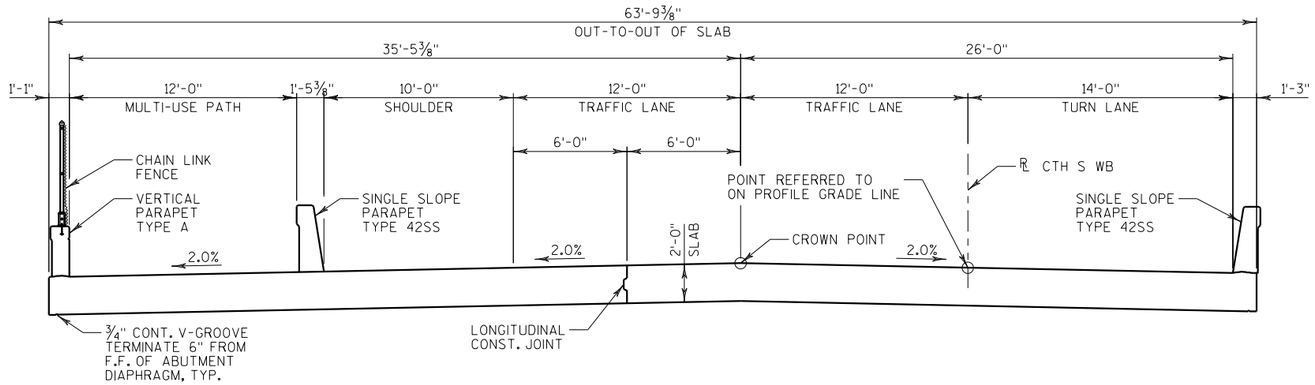

CROSS SECTION THRU BRIDGE

(LOOKING EAST)

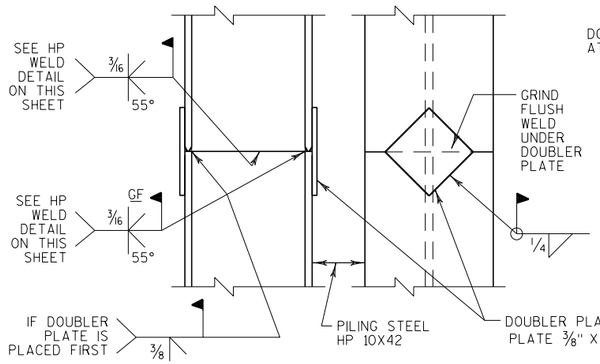

PILE SPLICE DETAILS

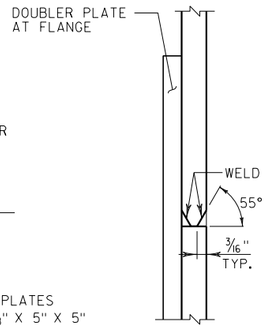

HP WELD DETAIL

(FLANGE SHOWN, WEB SIMILAR)

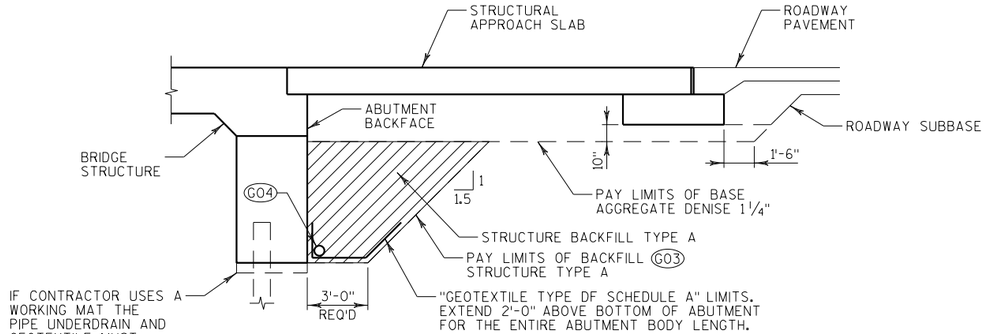

TYPICAL SECTION THRU ABUTMENT

(G03) BACKFILL PAY LIMITS. BACKFILL BEYOND BACKFILL PAY LIMITS SHALL BE INCIDENTAL TO EXCAVATION FOR STRUCTURES. LIMITS OF EXCAVATION SHALL BE DETERMINED BY THE CONTRACTOR.

(G04) PIPE UNDERDRAIN WRAPPED 6-INCH. SLOPE 0.5% MIN. REFER TO ABUTMENT DETAILS FOR TIE-IN DETAILS. ATTACH RODENT SHIELD AT ENDS OF DAYLIGHTED PIPE UNDERDRAIN. SEE 'ABUTMENT REINFORCEMENT' SHEET FOR DETAILS.

GENERAL NOTES

DRAWINGS SHALL NOT BE SCALED.

BAR STEEL REINFORCEMENT SHALL BE EMBEDDED 2" CLEAR UNLESS OTHERWISE SHOWN OR NOTED.

THE FIRST OR FIRST TWO DIGITS OF THE BAR MARK SIGNIFIES THE BAR SIZE.

THE UPPER LIMITS OF "EXCAVATION FOR STRUCTURES BRIDGES B-30-149" SHALL BE THE EXISTING GROUND LINE

ALL DIMENSIONS ARE IN FEET AND INCHES. ALL STATIONS AND ELEVATIONS ARE IN FEET.

THE SLOPE OF THE FILL IN FRONT OF THE ABUTMENTS SHALL BE COVERED WITH HEAVY RIPRAP AND GEOTEXTILE TYPE 'HR' TO THE EXTENT SHOWN ON THE 'GENERAL PLAN' SHEET AND IN THE ABUTMENT DETAILS.

AT THE BACKFACE OF ABUTMENT ALL VOLUME WHICH CANNOT BE PLACED BEFORE ABUTMENT CONSTRUCTION AND IS NOT OCCUPIED BY THE NEW STRUCTURE SHALL BE BACKFILLED WITH STRUCTURE BACKFILL TYPE A.

SLAB FALSEWORK SHALL BE SUPPORTED ON PILES OR THE SUBSTRUCTURE UNLESS AN ALTERNATE METHOD IS APPROVED BY THE ENGINEER.

PROTECTIVE SURFACE TREATMENT SHALL BE APPLIED TO THE TOP OF SLAB AND STRUCTURAL APPROACH SLABS BETWEEN PARAPETS.

PIGMENTED SURFACE SEALER SHALL BE APPLIED TO THE FRONT FACE AND TOP OF PARAPETS INCLUDING PARAPETS ON THE STRUCTURAL APPROACH SLABS.

BEVEL EXPOSED EDGES OF CONCRETE 3/4" UNLESS NOTED OTHERWISE.

VARIATIONS TO THE PROPOSED PROFILE GRADE LINE OVER 1/4" MUST BE SUBMITTED BY THE FIELD ENGINEER TO THE DESIGNER FOR REVIEW.

THE EXISTING SOIL CONTAINS AN UPPER LAYER OF DENSE SILTY SOIL. THIS UPPER DENSE SILT LAYER WILL NOT DEVELOP THE SPECIFIED CAPACITIES, AND PILES MUST NOT BE TERMINATED WITHIN THIS UPPER SOIL STRATA. THE PILES MUST BE DRIVEN TO THE UNDERLYING DENSE SOILS AS SPECIFIED IN THE GEOTECHNICAL REPORT IN ORDER TO ACHIEVE THE REQUIRED RESISTANCE.

CONSTRUCTION OF THE ABUTMENTS MAY ENCROACH UPON OR EXTEND BELOW THE WATER LEVEL, AND MAY REQUIRE COMPREHENSIVE DEWATERING WITHIN THE CONSTRUTION AREA. DEWATERING IS RECOMMENDED TO BE PERFORMED TO A DEPTH OF AT LEAST 2-FT BELOW THE LOWEST LEVEL OF EXCAVATION PERFORMED. COST OF DEWATERING AND ANY SHEET PILING/COFFERDAM TYPE CONSTRUCTION REQUIRED IS INCLUDED IN THE BID ITEM "EXCAVATION FOR STRUCTURES BRIDGES B-30-149".

PARTIAL REMOVAL OF WINGWALLS 2 AND 3 OF EXISTING BRIDGE B-30-76 IS INCLUDED IN BID ITEM "REMOVING OLD STRUCTURE STATION 41+68". ALL CONCRETE REMOVAL NOT COVERED BY NEW CONCRETE SHALL BE DEFINED BY A 1-INCH DEEP SAWCUT.

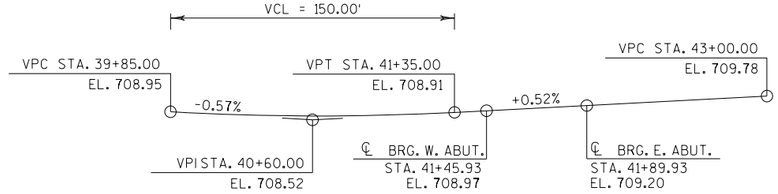

PROFILE GRADE LINE - CTH S WB

NO.	DATE	REVISION	BY

STATE OF WISCONSIN
DEPARTMENT OF TRANSPORTATION

STRUCTURE B-30-149

DRAWN BY PFP | PLANS CK'D. SJG

SECTION, NOTES AND QUANTITIES

SHEET 2 OF 18
~~313~~

8

8

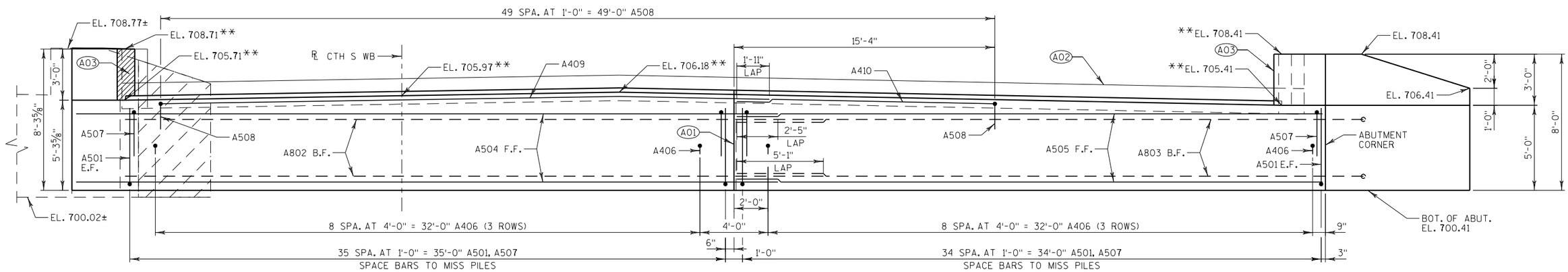

WEST ABUTMENT ELEVATION

(LOOKING WEST)

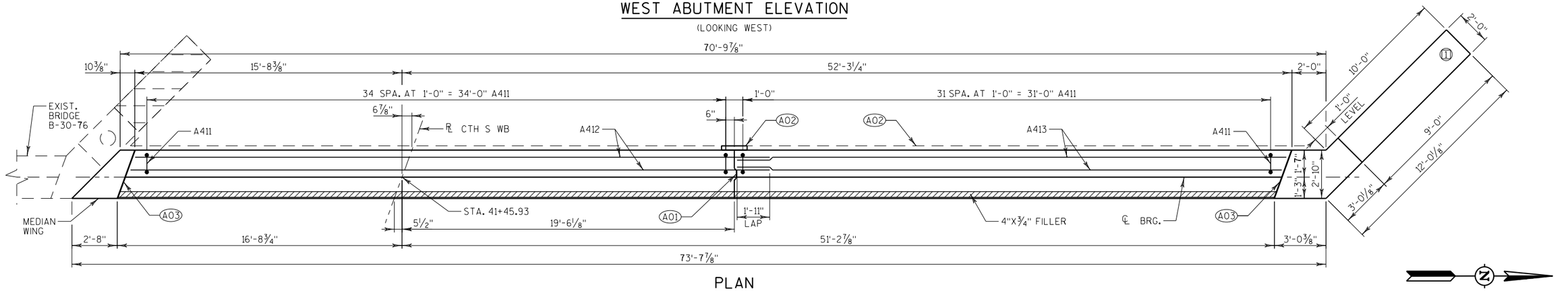

PLAN

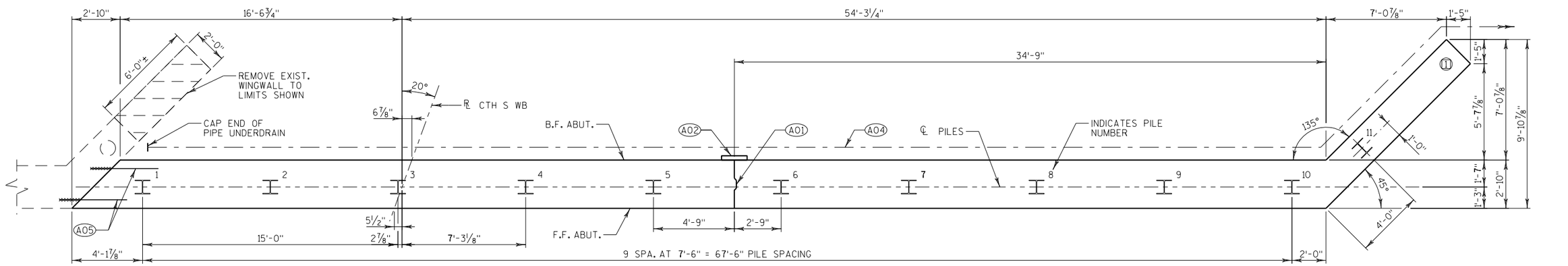

PILE PLAN

NOTES

FOR TYPICAL SECTION THRU ABUTMENT BODY SEE "WEST ABUTMENT DETAILS" SHEET.

WEST ABUTMENT TO BE SUPPORTED ON HP10X42 STEEL PILING DRIVEN TO A REQUIRED DRIVING RESISTANCE OF 180 TONS PER PILE AS DETERMINED BY THE MODIFIED GATES DYNAMIC FORMULA. ESTIMATED 70 FT. PILE LENGTHS AT THE WEST ABUTMENT.

SEE "SECTION, NOTES AND QUANTITIES" SHEET FOR PILE SPLICE DETAILS.

SEAL ALL EXPOSED HORIZONTAL AND VERTICAL SURFACES OF ½" FILLER WITH NON-STAINING NON-BITUMINOUS JOINT SEALER. (1" DEEP AND HOLD ⅛" BELOW SURFACE OF CONCRETE). EXTEND SEALER 3" BELOW GUTTER LINE AT INSIDE FACE.

(A01) VERTICAL CONSTRUCTION JOINT KEYWAY FORMED BY BEVELED 2X8. RUN BAR STEEL THRU JOINT. SEE "DETAIL C" ON "ABUTMENT REINFORCEMENT" SHEET. FOR OPTIONAL DETAILS SEE "ALTERNATE CONSTRUCTION JOINT" SHEET.

(A02) 18" RUBBERIZED MEMBRANE WATERPROOFING. SEAL ALL HORIZONTAL AND VERTICAL JOINTS ON BACK FACE.

(A03) ½" FILLER TO EXTEND FROM BRIDGE SEAT TO TOP OF WING.

(A04) PIPE UNDERDRAIN WRAPPED (6-INCH). SLOPE 0.5% MIN. TO SUITABLE DRAINAGE. ATTACH RODENT SHIELD AT ENDS OF PIPE UNDERDRAIN. REFER TO "ABUTMENT REINFORCEMENT" SHEET FOR RODENT SCREEN DETAILS.

(A05) A623 "ADHESIVE ANCHOR NO. 6 BAR" AT 1'-0" (MAX.) VERTICAL SPACING. EMBED 1'-3" INTO WEST ABUTMENT BODY OF EXISTING BRIDGE B-30-76.

LEGEND

(1) INDICATES WING NUMBER

** ELEVATION GIVEN AT ℄ OF BEARING.

NO.	DATE	REVISION	BY

STATE OF WISCONSIN
DEPARTMENT OF TRANSPORTATION

STRUCTURE B-30-149

DRAWN BY PFP | PLANS CK'D. SJG

WEST ABUTMENT

SHEET 3 OF 18
314

8

8

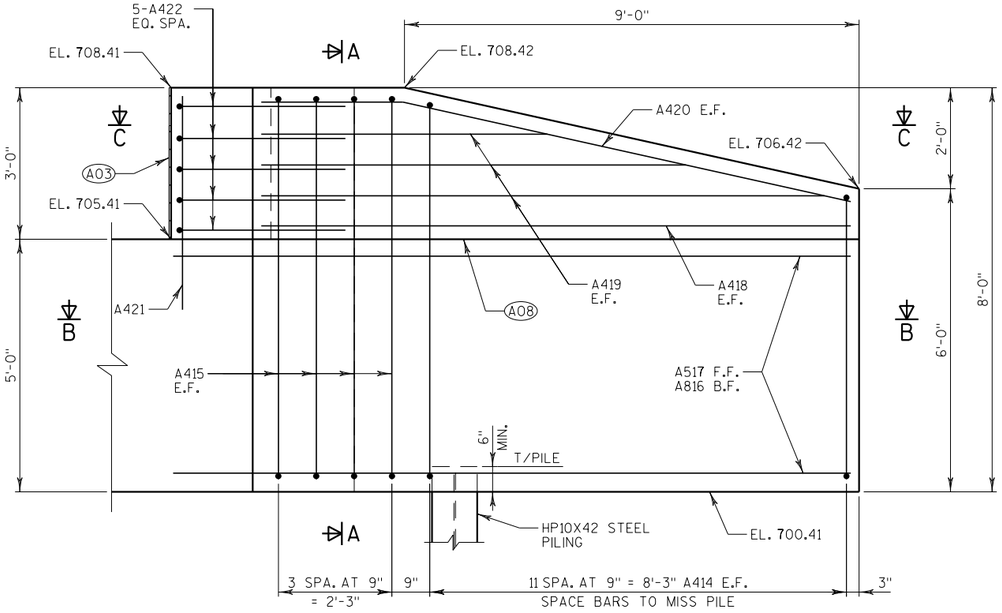

WING 1 ELEVATION

(LOOKING AT FRONT FACE)

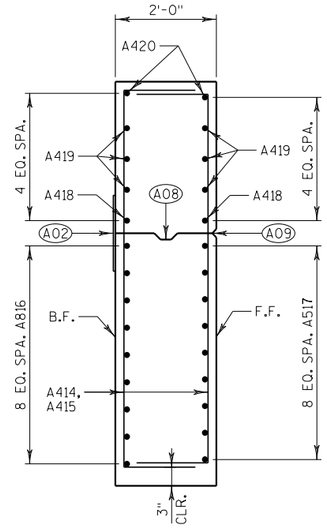

SECTION A

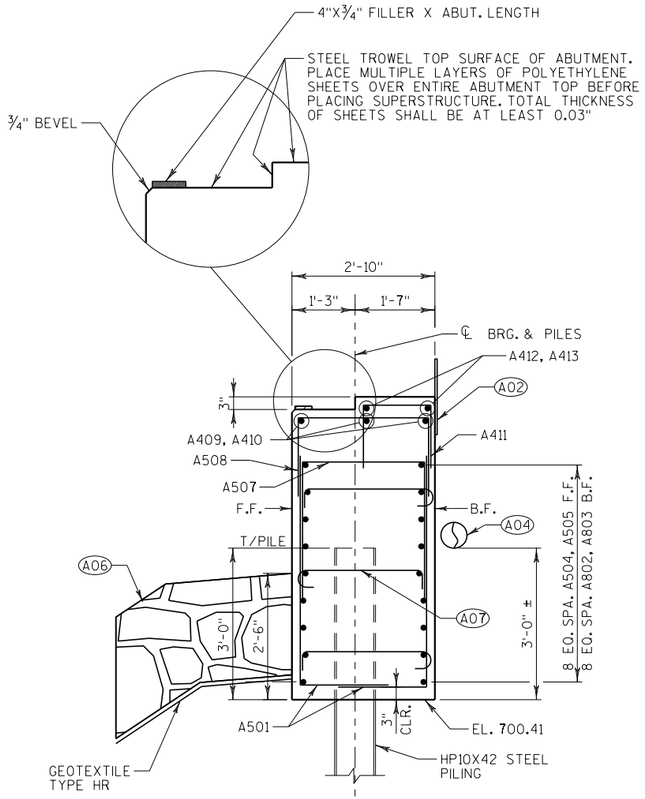

TYPICAL SECTION THRU ABUTMENT BODY

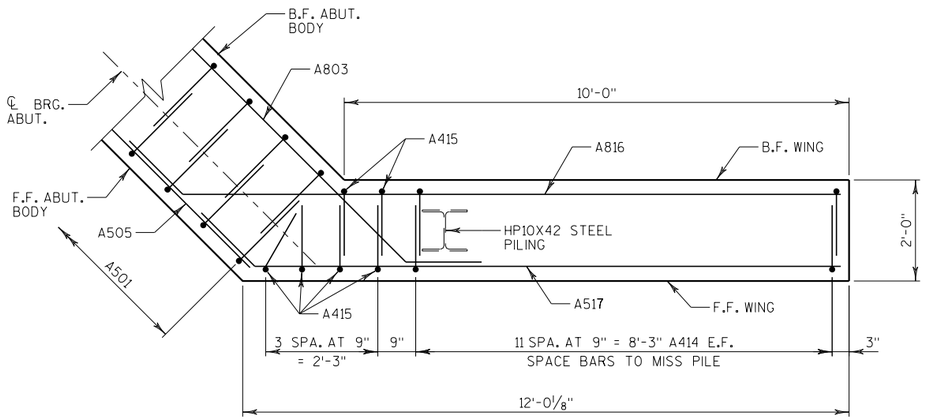

SECTION B

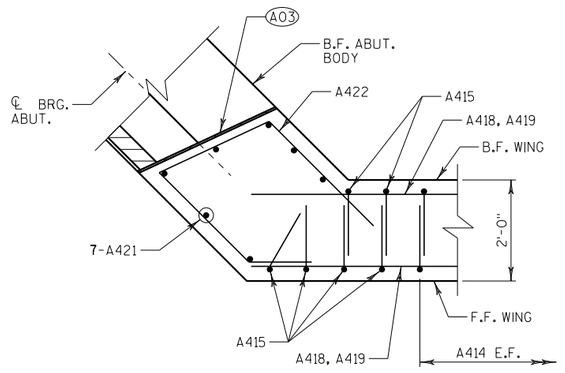

SECTION C

NOTES

WEST ABUTMENT TO BE SUPPORTED ON HP10X42 STEEL PILING DRIVEN TO A REQUIRED DRIVING RESISTANCE OF 180 TONS PER PILE AS DETERMINED BY THE MODIFIED GATES DYNAMIC FORMULA. ESTIMATED 70 FT. PILE LENGTHS AT THE WEST ABUTMENT.

(A02) 18" RUBBERIZED MEMBRANE WATERPROOFING. SEAL ALL HORIZONTAL AND VERTICAL JOINTS ON BACK FACE. NOT REQUIRED ON WINGWALL IF OPTIONAL CONSTRUCTION JOINT IS NOT USED.

(A03) ½" FILLER TO EXTEND FROM BRIDGE SEAT TO TOP OF WING.

(A04) PIPE UNDERDRAIN WRAPPED (6-INCH). SLOPE 0.5% MIN. TO SUITABLE DRAINAGE. ATTACH RODENT SHIELD AT ENDS OF PIPE UNDERDRAIN. REFER TO "ABUTMENT REINFORCEMENT" SHEET FOR RODENT SCREEN DETAILS.

(A06) HEAVY RIPRAP. FILL THE VOIDS OF A 5-FT WIDE SECTION (STARTING AT THE TOP OF BERM) WITH SELECT CRUSHED MATERIAL. INCLUDED IN BID ITEM "SELECT CRUSHED MATERIAL FOR TRAVEL CORRIDOR".

(A07) 3-A406 BARS. ALTERNATE THE POSITION OF THE 90° AND 180° HOOKS AT EACH VERTICAL LAYER OF TIES AS SHOWN.

(A08) OPTIONAL KEYED CONSTRUCTION JOINT FORMED BY BEVELED 2"X6".

(A09) ¾" 'V' GROOVE ON FRONT FACE OF WINGWALL. NOT REQUIRED IF OPTIONAL CONSTRUCTION JOINT IS NOT USED.

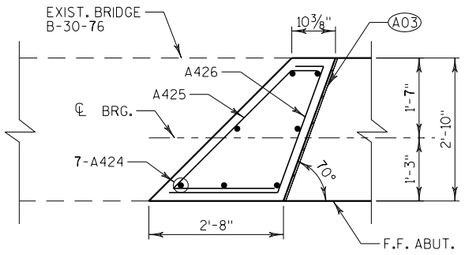

MEDIAN WING PLAN

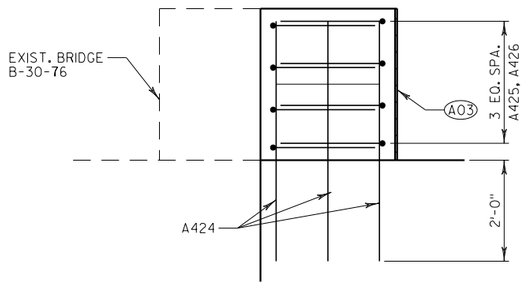

MEDIAN WING ELEVATION

(LOOKING WEST)

NO.	DATE	REVISION	BY

STATE OF WISCONSIN
DEPARTMENT OF TRANSPORTATION

STRUCTURE B-30-149

DRAWN BY PFP | PLANS CK'D. SJG

WEST ABUTMENT DETAILS

SHEET 4 OF 18
315

8

8

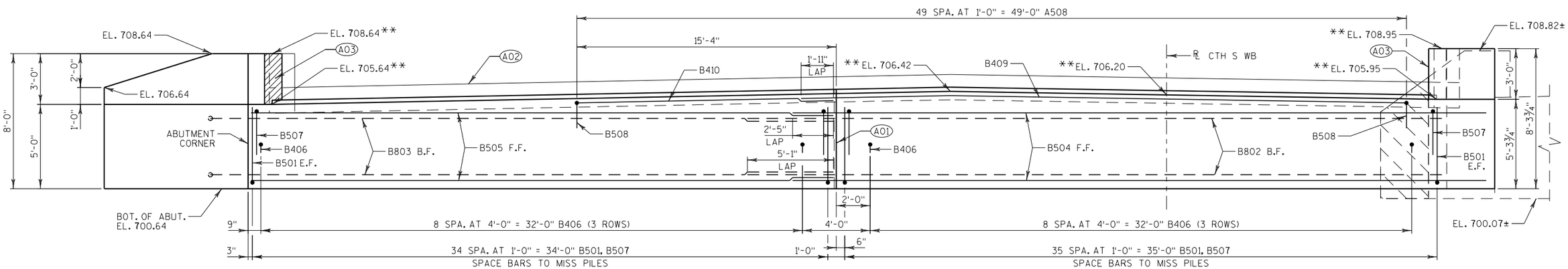

EAST ABUTMENT ELEVATION

(LOOKING EAST)

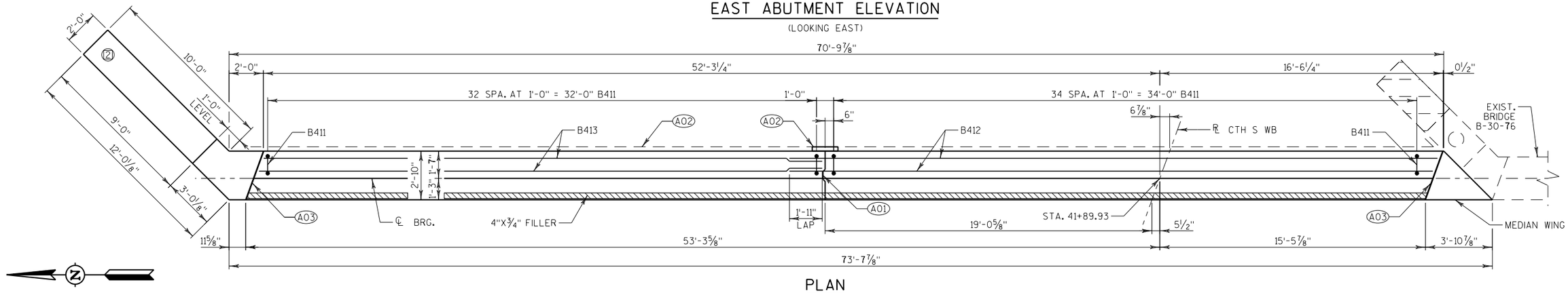

PLAN

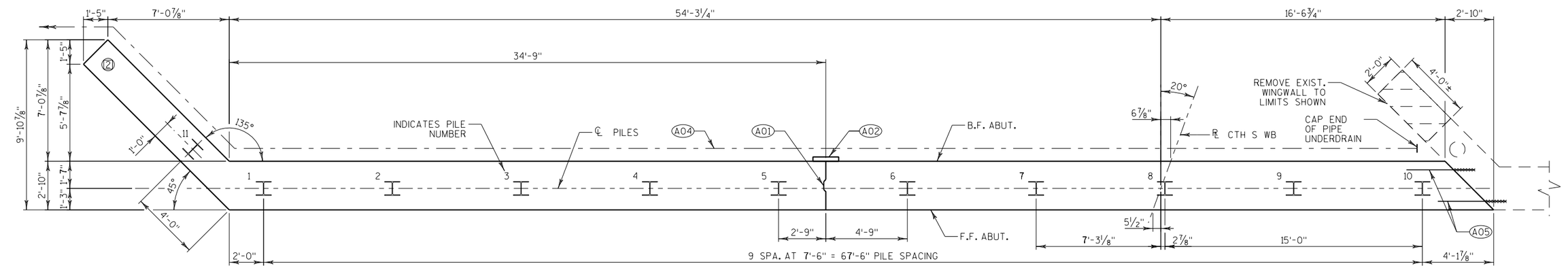

PILE PLAN

NOTES

FOR TYPICAL SECTION THRU ABUTMENT BODY SEE "EAST ABUTMENT DETAILS" SHEET.

EAST ABUTMENT TO BE SUPPORTED ON HP10X42 STEEL PILING DRIVEN TO A REQUIRED DRIVING RESISTANCE OF 180 TONS PER PILE AS DETERMINED BY THE MODIFIED GATES DYNAMIC FORMULA. ESTIMATED 65 FT. PILE LENGTHS AT THE EAST ABUTMENT.

SEE "SECTION, NOTES AND QUANTITIES" SHEET FOR PILE SPLICE DETAILS.

SEAL ALL EXPOSED HORIZONTAL AND VERTICAL SURFACES OF ½" FILLER WITH NON-STAINING NON-BITUMINOUS JOINT SEALER. (1" DEEP AND HOLD ⅛" BELOW SURFACE OF CONCRETE). EXTEND SEALER 3" BELOW GUTTER LINE AT INSIDE FACE.

(A01) VERTICAL CONSTRUCTION JOINT KEYWAY FORMED BY BEVELED 2X8. RUN BAR STEEL THRU JOINT. SEE "DETAIL C" ON "ABUTMENT REINFORCEMENT" SHEET. FOR OPTIONAL DETAILS SEE "ALTERNATE CONSTRUCTION JOINT" SHEET.

(A02) 18" RUBBERIZED MEMBRANE WATERPROOFING. SEAL ALL HORIZONTAL AND VERTICAL JOINTS ON BACK FACE.

(A03) ½" FILLER TO EXTEND FROM BRIDGE SEAT TO TOP OF WING.

(A04) PIPE UNDERDRAIN WRAPPED (6-INCH). SLOPE 0.5% MIN. TO SUITABLE DRAINAGE. ATTACH RODENT SHIELD AT ENDS OF PIPE UNDERDRAIN. REFER TO "ABUTMENT REINFORCEMENT" SHEET FOR RODENT SCREEN DETAILS.

(A05) B623 "ADHESIVE ANCHOR NO. 6 BAR" AT 1'-0" (MAX.) VERTICAL SPACING. EMBED 1'-3" INTO EAST ABUTMENT BODY OF EXISTING BRIDGE B-30-76.

LEGEND

(2) INDICATES WING NUMBER

** ELEVATION GIVEN AT ℄ OF BEARING.

NO.	DATE	REVISION	BY

STATE OF WISCONSIN
DEPARTMENT OF TRANSPORTATION

STRUCTURE B-30-149

DRAWN BY PFP | PLANS CK'D. SJG

EAST ABUTMENT

SHEET 5 OF 18
~~316~~

8

8

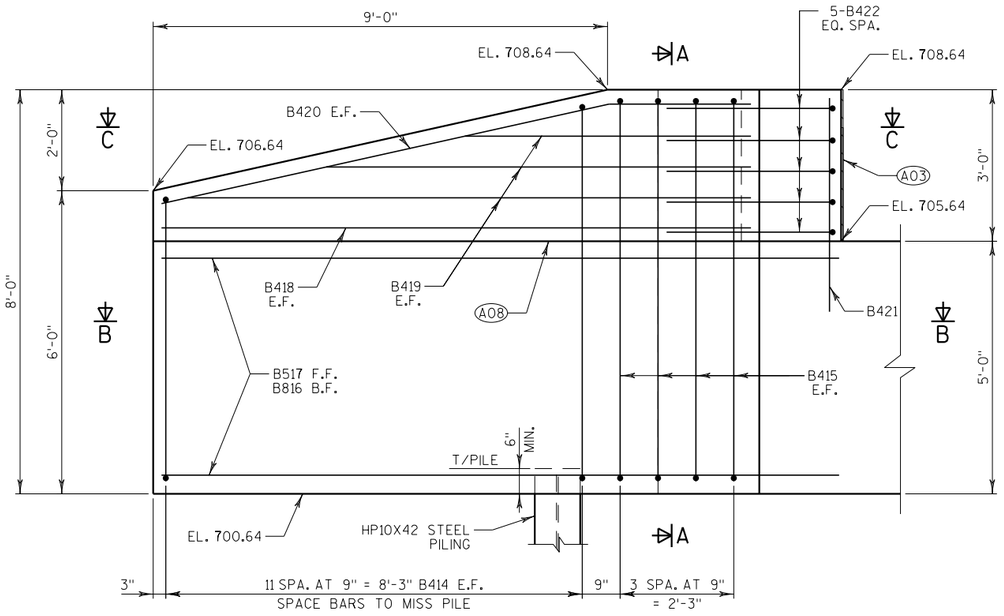

WING 2 ELEVATION

(LOOKING AT FRONT FACE)

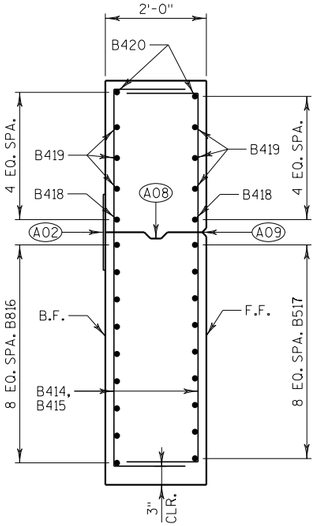

SECTION A

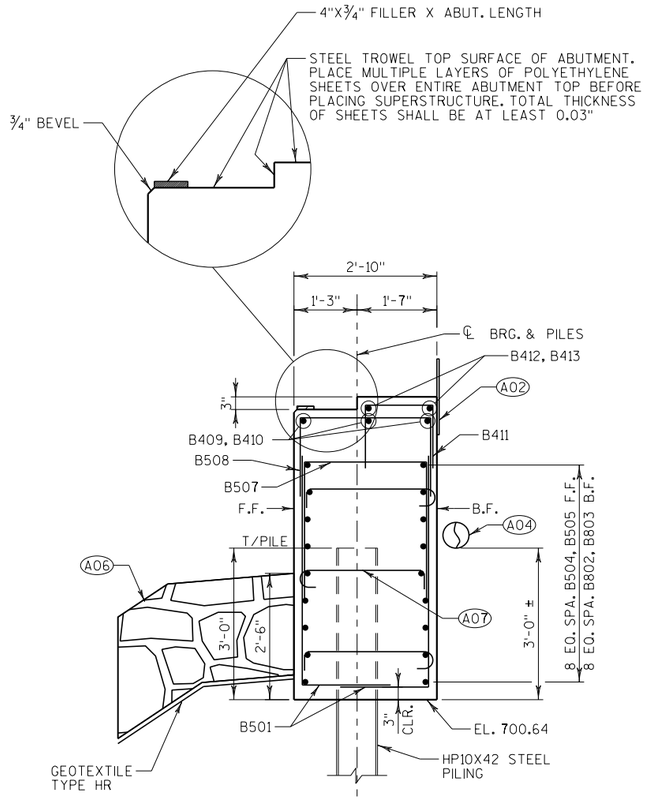

TYPICAL SECTION THRU ABUTMENT BODY

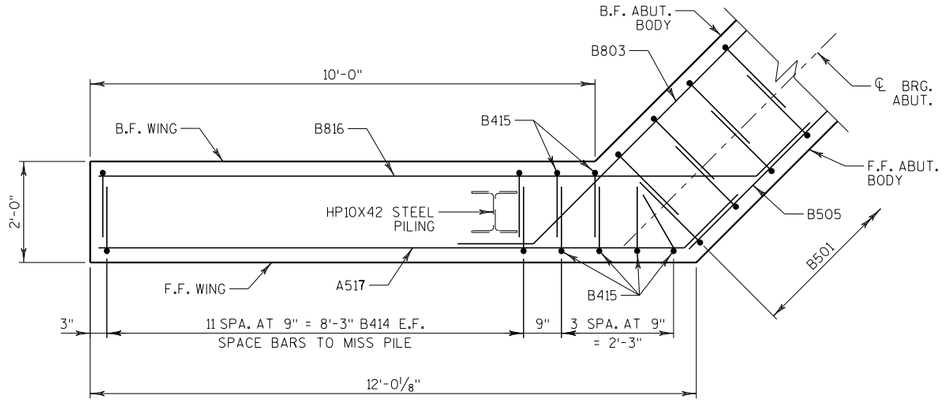

SECTION B

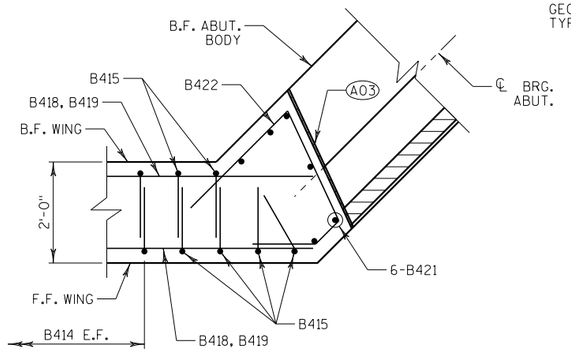

SECTION C

NOTES

EAST ABUTMENT TO BE SUPPORTED ON HP10X42 STEEL PILING DRIVEN TO A REQUIRED DRIVING RESISTANCE OF 180 TONS PER PILE AS DETERMINED BY THE MODIFIED GATES DYNAMIC FORMULA. ESTIMATED 65 FT. PILE LENGTHS AT THE EAST ABUTMENT.

(A02) 18" RUBBERIZED MEMBRANE WATERPROOFING. SEAL ALL HORIZONTAL AND VERTICAL JOINTS ON BACK FACE. NOT REQUIRED ON WINGWALL IF OPTIONAL CONSTRUCTION JOINT IS NOT USED.

(A03) ½" FILLER TO EXTEND FROM BRIDGE SEAT TO TOP OF WING.

(A04) PIPE UNDERDRAIN WRAPPED (6-INCH). SLOPE 0.5% MIN. TO SUITABLE DRAINAGE. ATTACH RODENT SHIELD AT ENDS OF PIPE UNDERDRAIN. REFER TO "ABUTMENT REINFORCEMENT" SHEET FOR RODENT SCREEN DETAILS.

(A06) HEAVY RIPRAP. FILL THE VOIDS OF A 5-FT WIDE SECTION (STARTING AT THE TOP OF BERM) WITH SELECT CRUSHED MATERIAL. INCLUDED IN BID ITEM "SELECT CRUSHED MATERIAL FOR TRAVEL CORRIDOR".

(A07) 3-B406 BARS. ALTERNATE THE POSITION OF THE 90° AND 180° HOOKS AT EACH VERTICAL LAYER OF TIES AS SHOWN.

(A08) OPTIONAL KEYED CONSTRUCTION JOINT FORMED BY BEVELED 2"X6".

(A09) ¾" 'V' GROOVE ON FRONT FACE OF WINGWALL. NOT REQUIRED IF OPTIONAL CONSTRUCTION JOINT IS NOT USED.

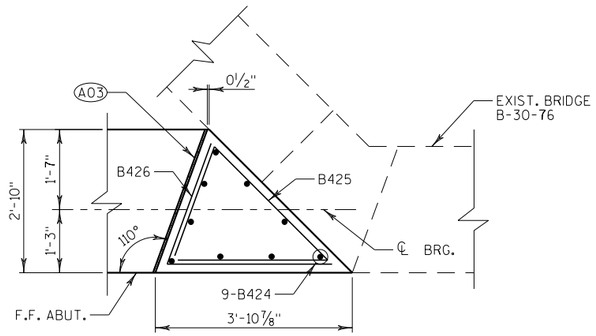

MEDIAN WING PLAN

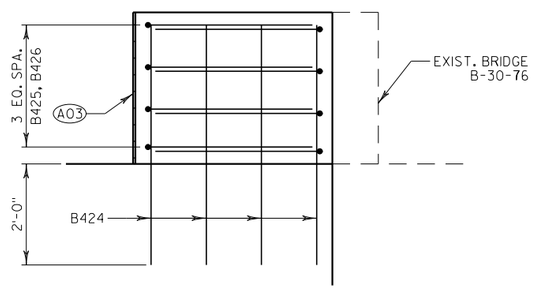

MEDIAN WING ELEVATION

(LOOKING EAST)

NO.	DATE	REVISION	BY

STATE OF WISCONSIN
DEPARTMENT OF TRANSPORTATION

STRUCTURE B-30-149

DRAWN BY PFP | PLANS CK'D. SJG

EAST ABUTMENT DETAILS

SHEET 6 OF 18
317

8

8

BILL OF BARS - WEST ABUTMENT

BAR MARK	COAT	NO. REQ'D.	LENGTH	BENT	BAR SERIES	LOCATION
A501		142	5'-4"	X		BODY VERTICAL
A802		9	41'-4"			BODY LONGITUDINAL
A803		9	38'-8"	X		BODY LONGITUDINAL
A504		9	41'-5"			BODY LONGITUDINAL
A505		9	34'-5"			BODY LONGITUDINAL
A406		54	3'-4"	X		BODY TIE
A507		71	7'-11"	X		BODY TOP
A508		50	6'-3"	X		BODY TOP HAIRPIN
A409		3	36'-0"			BODY TOP LONGITUDINAL
A410		3	15'-4"			BODY TOP LONGITUDINAL
A411		67	3'-7"	X		BODY TOP HAIRPIN
A412		2	37'-7"			BODY TOP LONGITUDINAL
A413		2	32'-0"			BODY TOP LONGITUDINAL
A414	X	24	9'-0"	X	Ⓧ	WING VERTICAL
A415	X	6	10'-1"	X		WING VERTICAL
A816	X	9	14'-7"	X		WING LONGITUDINAL
A517	X	9	13'-1"	X		WING LONGITUDINAL
A418	X	2	11'-8"			WING TOP LONGITUDINAL
A419	X	6	8'-8"		Ⓧ	WING TOP LONGITUDINAL
A420	X	2	11'-9"	X		WING TOP LONGITUDINAL
A421	X	7	4'-10"			WING VERTICAL
A422	X	5	9'-4"	X		WING HORIZONTAL
A623		12	4'-0"			BODY DOWEL AT EXIST. ABUT.
A424	X	7	4'-10"			MEDIAN WING VERTICAL
A425	X	4	6'-4"	X		MEDIAN WING HORIZONTAL
A426	X	4	5'-6"	X		MEDIAN WING HORIZONTAL

THE FIRST OR FIRST TWO DIGITS OF THE BAR MARK SIGNIFIES THE BAR SIZE.

ALL BAR BEND DIMENSIONS ARE OUT TO OUT OF BAR.

Ⓧ LENGTH SHOWN FOR BARS IN SERIES IS AN AVERAGE LENGTH AND SHOULD ONLY BE USED FOR BAR WEIGHT CALCULATIONS. SEE 'BAR SERIES' TABLE FOR ACTUAL LENGTHS.

BILL OF BARS - EAST ABUTMENT

BAR MARK	COAT	NO. REQ'D.	LENGTH	BENT	BAR SERIES	LOCATION
B501		142	5'-4"	X		BODY VERTICAL
B802		9	41'-4"			BODY LONGITUDINAL
B803		9	38'-8"	X		BODY LONGITUDINAL
B504		9	41'-5"			BODY LONGITUDINAL
B505		9	34'-5"			BODY LONGITUDINAL
B406		54	3'-4"	X		BODY TIE
B507		71	7'-11"	X		BODY TOP
B508		50	6'-3"	X		BODY TOP HAIRPIN
B409		3	36'-0"			BODY TOP LONGITUDINAL
B410		3	15'-4"			BODY TOP LONGITUDINAL
B411		68	3'-7"	X		BODY TOP HAIRPIN
B412		2	38'-0"			BODY TOP LONGITUDINAL
B413		2	32'-6"			BODY TOP LONGITUDINAL
B414	X	24	9'-0"	X	Ⓧ	WING VERTICAL
B415	X	6	10'-1"	X		WING VERTICAL
B816	X	9	14'-7"	X		WING LONGITUDINAL
B517	X	9	13'-1"	X		WING LONGITUDINAL
B418	X	2	11'-8"			WING TOP LONGITUDINAL
B419	X	6	8'-8"		Ⓧ	WING TOP LONGITUDINAL
B420	X	2	11'-9"	X		WING TOP LONGITUDINAL
B421	X	6	4'-10"			WING VERTICAL
B422	X	5	7'-3"	X		WING HORIZONTAL
B623		12	4'-0"			BODY DOWEL AT EXIST. ABUT.
B424	X	9	4'-10"			MEDIAN WING VERTICAL
B425	X	4	9'-0"	X		MEDIAN WING HORIZONTAL
B426	X	4	5'-9"	X		MEDIAN WING HORIZONTAL

THE FIRST OR FIRST TWO DIGITS OF THE BAR MARK SIGNIFIES THE BAR SIZE.

ALL BAR BEND DIMENSIONS ARE OUT TO OUT OF BAR.

Ⓧ LENGTH SHOWN FOR BARS IN SERIES IS AN AVERAGE LENGTH AND SHOULD ONLY BE USED FOR BAR WEIGHT CALCULATIONS. SEE 'BAR SERIES' TABLE FOR ACTUAL LENGTHS.

BAR SERIES TABLE

BAR MARK	NO. REQ'D.	LENGTH
A414, B414	2 SERIES OF 12	8'-1" TO 9'-11"
A419, B419	2 SERIES OF 3	5'-8" TO 11'-8"

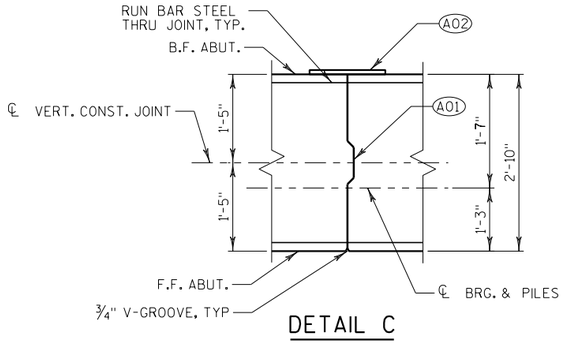

DETAIL C

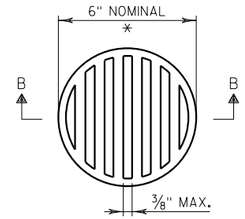

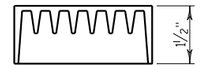

SECTION B-B

RODENT SHIELD DETAIL

* DIMENSIONS ARE APPROXIMATE. THE GRATE IS SIZED TO FIT INTO A PIPE COUPLING. ORIENT SO SLOTS ARE VERTICAL.

THE RODENT SHIELD, PIPE COUPLING AND SCREWS SHALL BE CONSIDERED INCIDENTAL TO THE BID ITEM "PIPE UNDERDRAIN WRAPPED 6-INCH".

THE RODENT SHIELD SHALL BE A PVC GRATE SIMILAR TO THIS DETAIL. THE GRATE IS COMMERCIALLY AVAILABLE AS A FLOOR STRAINER. A PIPE COUPLING IS REQUIRED FOR THE ATTACHMENT OF THIS SHIELD TO THE EXPOSED END OF THE PIPE UNDERDRAIN. THE SHIELD SHALL BE FASTENED TO THE PIPE COUPLING WITH TWO OR MORE NO. 10 X 1-INCH STAINLESS STEEL SHEET METAL SCREWS.

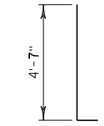

A501, B501

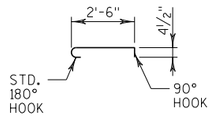

A406, B406

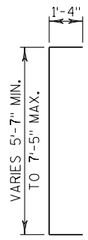

A414, B414

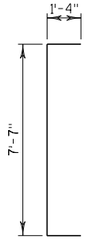

A415, B415

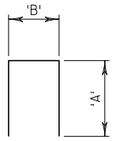

BAR MARK	DIM 'A'	DIM 'B'
A507, B507	2'-10"	2'-6"
A508, B508	2'-0"	2'-6"
A411, B411	1'-3"	1'-3"

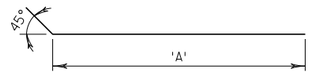

BAR MARK	DIM 'A'
A803, B803	37'-2"
A816, B816	13'-1"
A517, B517	11'-7"

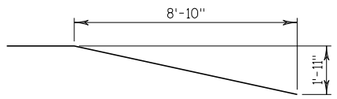

A420, B420

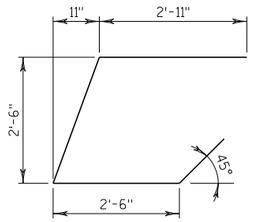

A422

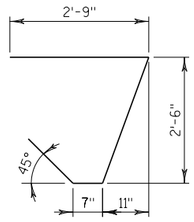

B422

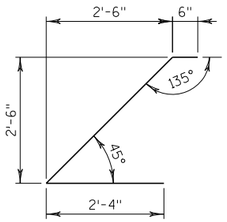

A425

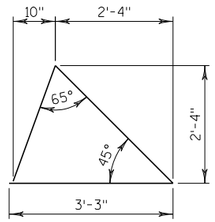

B425

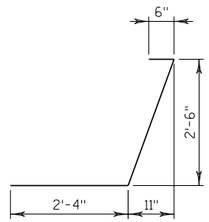

A426

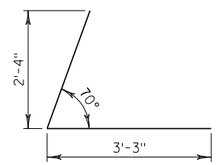

B426

NOTES

(A01) VERTICAL CONSTRUCTION JOINT KEYWAY FORMED BY BEVELED 2X8. RUN BAR STEEL THRU JOINT. FOR OPTIONAL DETAILS SEE "ALTERNATE CONSTRUCTION JOINT" SHEET.

(A02) 18" RUBBERIZED MEMBRANE WATERPROOFING. SEAL ALL HORIZONTAL AND VERTICAL JOINTS ON BACK FACE.

NO.	DATE	REVISION	BY

STATE OF WISCONSIN
DEPARTMENT OF TRANSPORTATION

STRUCTURE B-30-149

DRAWN BY PFP | PLANS CK'D. SJG

ABUTMENT REINFORCEMENT

SHEET 7 OF 18
~~318~~

8

8

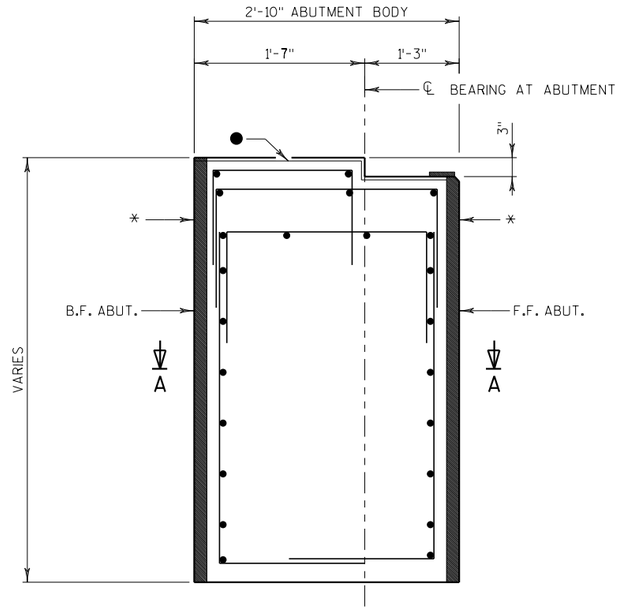

SECTION THRU ABUTMENT BODY

NOTES

PARTIAL ZINC OR PLASTIC BULKHEAD MAY BE USED AS ALTERNATE CONSTRUCTION JOINT, WITH THE PERMISSION OF THE ENGINEER, AT THE CONTRACTOR'S EXPENSE.

VERTICAL CONSTRUCTION JOINT KEYWAY IS NOT REQUIRED WHEN USING ALTERNATE CONSTRUCITON JOINT.

CARE IS TO BE USED IN CASTING CONCRETE AROUND BULKHEAD TO PREVENT DISLOCATION OR MISALIGNMENT OF THE BULKHEAD.

SAW CUTTING JOINT IS NOT ALLOWED.

● USE A JOINT TOOL TO CONSTRUCT A CONTRACTION JOINT APPROXIMATELY ½" DEEP.

* BENT ZINC OR PLASTIC STRIP

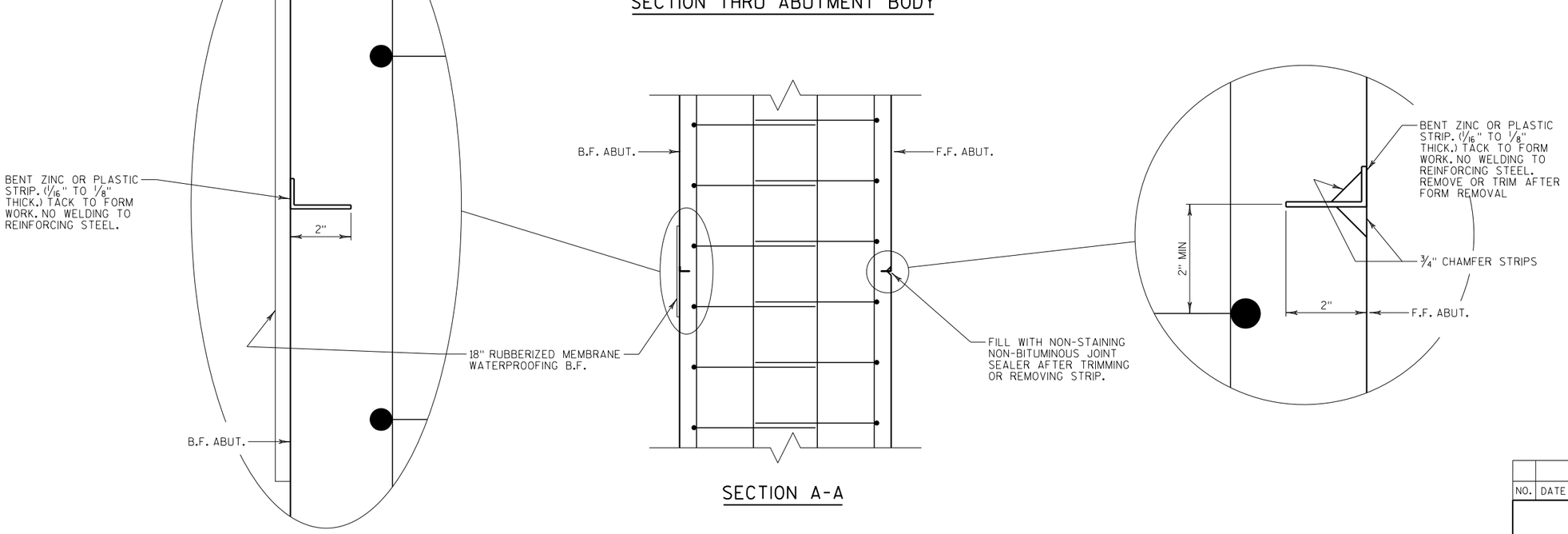

SECTION A-A

ALTERNATE CONSTRUCTION JOINT AT ABUTMENT

NO.	DATE	REVISION	BY

STATE OF WISCONSIN
DEPARTMENT OF TRANSPORTATION

STRUCTURE B-30-149

DRAWN BY PFP | PLANS CK'D. SJG

ALTERNATE CONSTRUCTION JOINT

SHEET 8 OF 18
~~319~~

8

8

NOTES

TOP TRANSVERSE BARS IN SLAB SHALL BE SUPPORTED BY INDIVIDUAL BAR CHAIRS AT APPROXIMATELY 3'-0" CENTERS EACH WAY. BOTTOM LONGITUDINAL BARS SHALL BE SUPPORTED BY CONTINUOUS BAR CHAIRS AT APPROXIMATELY 4'-0" CENTERS.

ALL SLAB THICKNESS DIMENSIONS ARE MINIMUM. ANY TOLERANCES NECESSARY TO CORRECT CONSTRUCTION DISCREPANCIES ARE TO BE PLUS (+).

PARAPETS PLACED ON TOP OF THE SLAB SHALL BE POURED AFTER FALSEWORK HAS BEEN RELEASED.

CAMBER SPAN AS SHOWN TO PROVIDE FOR DEAD LOAD DEFLECTION AND FUTURE CREEP. CAMBER DOES NOT INCLUDE ALLOWANCE FOR FORM SETTLEMENT.

PRIOR TO RELEASING SLAB FALSEWORK, TAKE TOP OF SLAB ELEVATIONS AT THE ℄ OF ABUTMENTS AND AT 5/10 PT. TO VERIFY CAMBER. TAKE ELEVATIONS ALONG GUTTER LINES AND CROWN OR ℄.

ALL TRANSVERSE BAR STEEL SHALL BE PLACED ON THE SKEW.

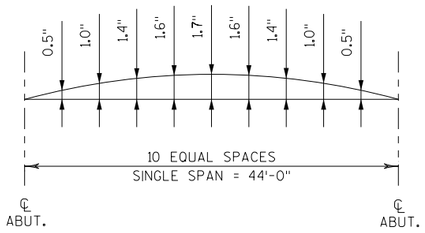

SLAB CAMBER DIAGRAM

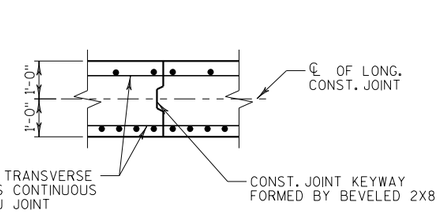

LONGITUDINAL CONSTRUCTION JOINT

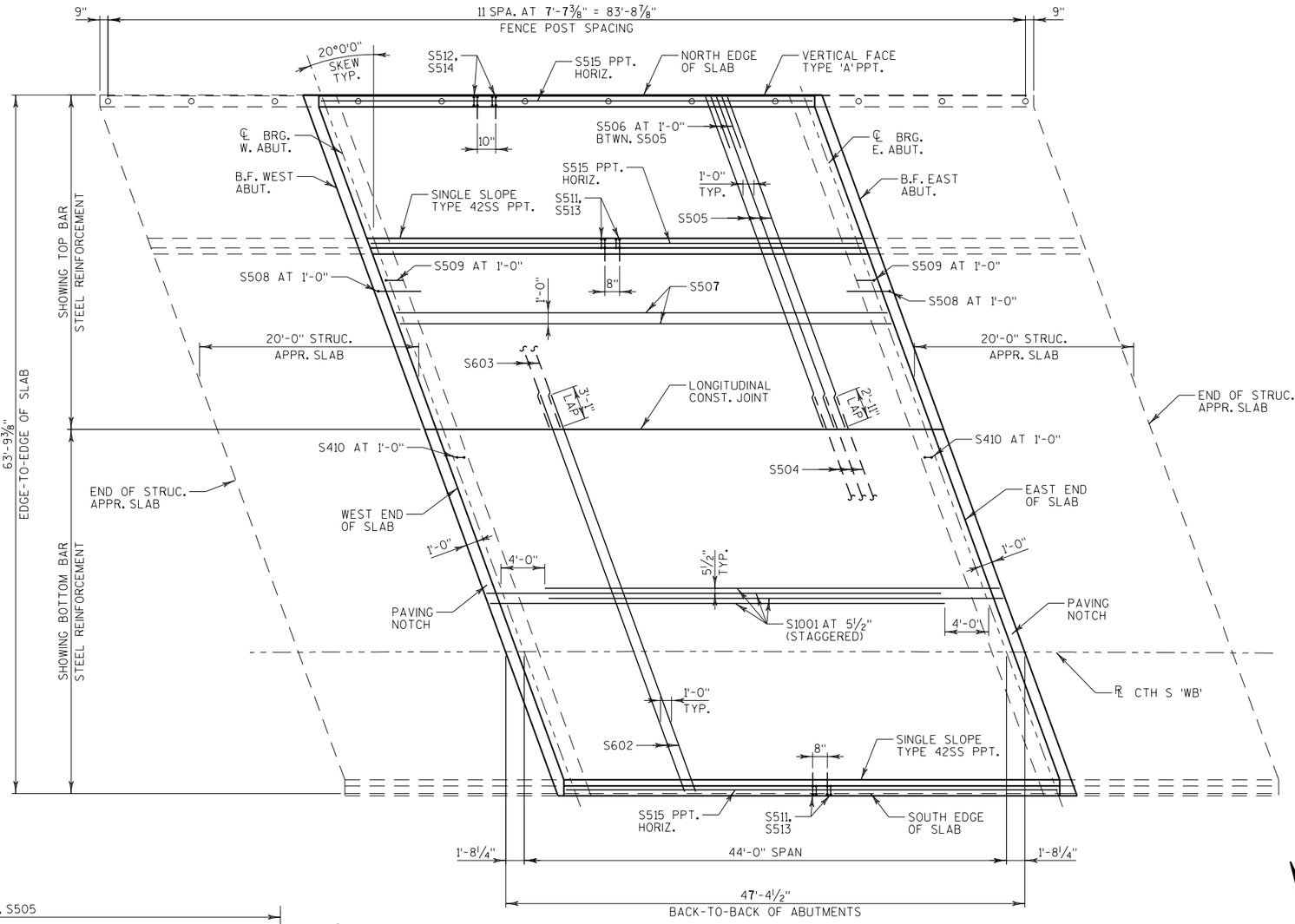

PLAN

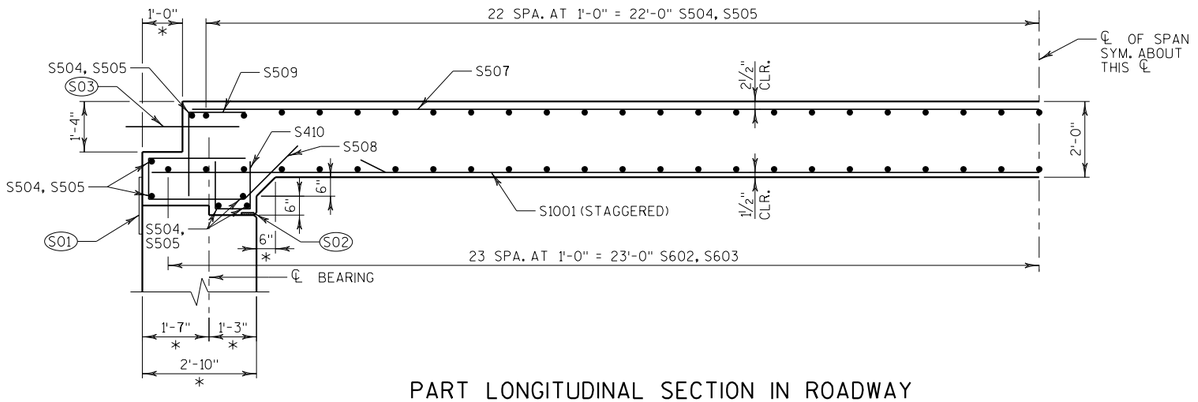

PART LONGITUDINAL SECTION IN ROADWAY

NOTE: HORIZONTAL DIMENSIONS ARE GIVEN PARALLEL TO THE ℄ OF THE SUPERSTRUCTURE, UNLESS NOTED OTHERWISE.

LEGEND

- (S01) 18" RUBBERIZED MEMBRANE WATERPROOFING
- (S02) ¾" BEVEL AND 4"X¾" FILLER, EXTEND FULL LENGTH OF ABUTMENT
- (S03) SS601 AT 1'-0" (STAINLESS STEEL)
- * DIMENSIONS ARE GIVEN NORMAL TO THE ℄ OF THE ABUTMENTS

NO.	DATE	REVISION	BY

STATE OF WISCONSIN
DEPARTMENT OF TRANSPORTATION

STRUCTURE B-30-149

DRAWN BY PFP | PLANS CK'D. SJG

SUPERSTRUCTURE

SHEET 9 OF 18
~~320~~

8

8

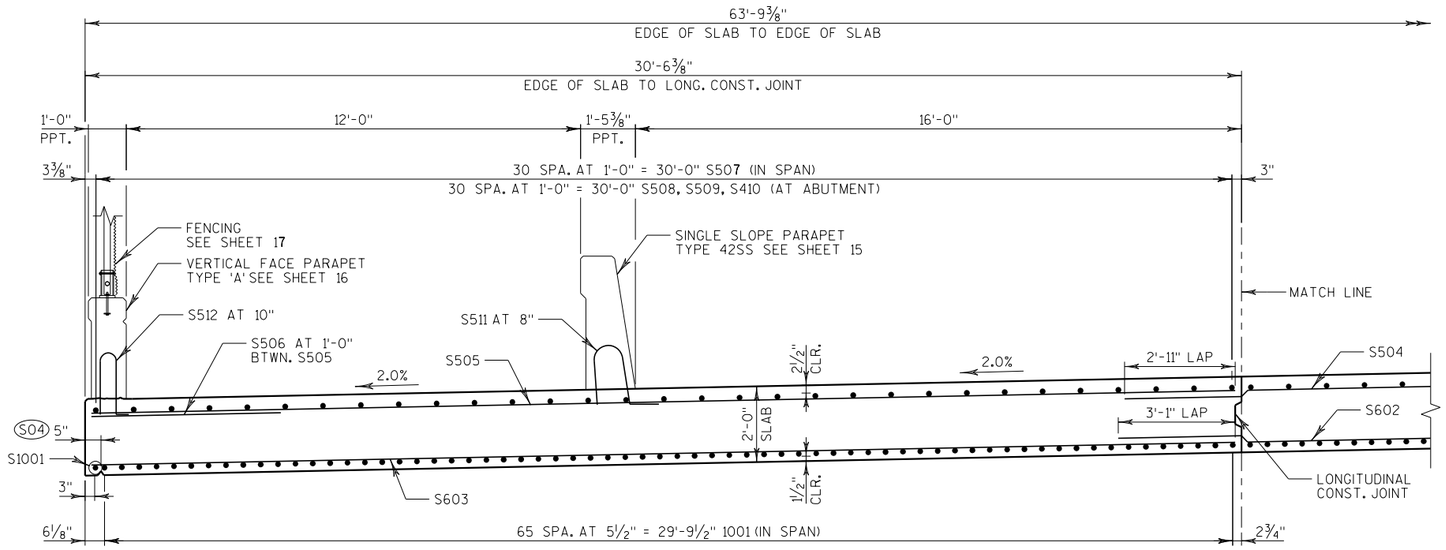

CROSS SECTION THRU ROADWAY

(LOOKING EAST)

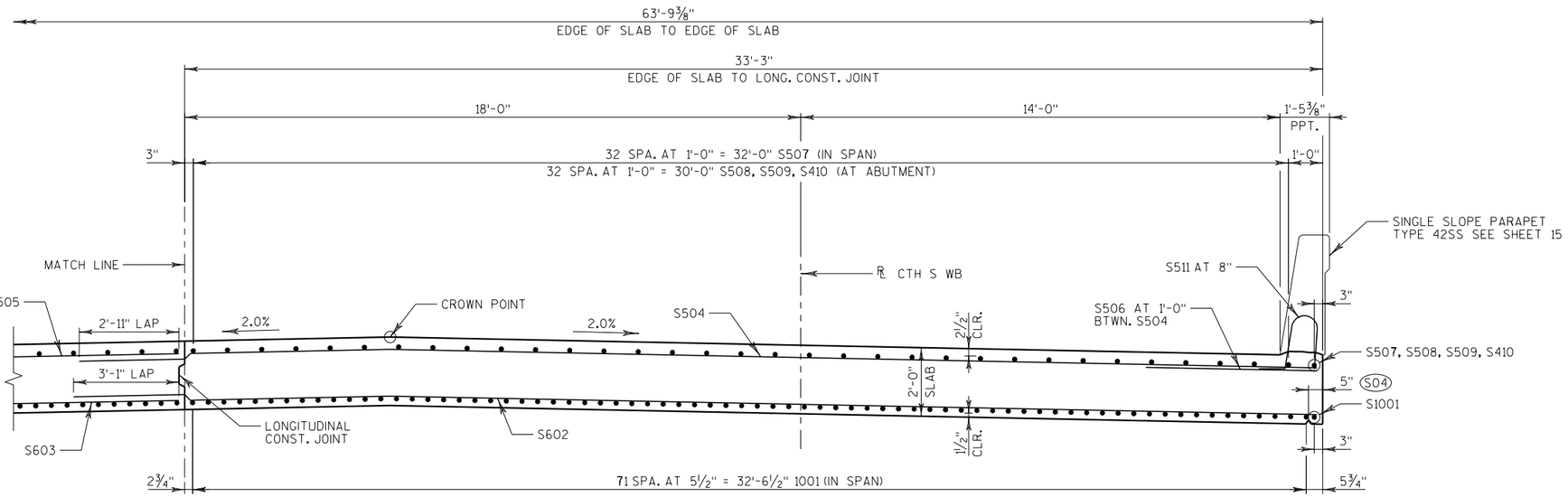

CROSS SECTION THRU ROADWAY

(LOOKING EAST)

TOP OF SLAB ELEVATIONS

	℄ BRG. W. ABUT.	1/10 PT.	2/10 PT.	3/10 PT.	4/10 PT.	5/10 PT.	6/10 PT.	7/10 PT.	8/10 PT.	9/10 PT.	℄ BRG. E. ABUT.
N. EDGE OF SLAB	708.41	708.43	708.46	708.48	708.50	708.53	708.55	708.57	708.60	708.62	708.64
CROWN	709.18	709.21	709.23	709.25	709.28	709.30	709.32	709.35	709.37	709.39	709.42
℄ CTH S 'WB'	708.97	708.99	709.01	709.04	709.06	709.08	709.11	709.13	709.15	709.18	709.20
S. EDGE OF SLAB	708.71	708.74	708.76	708.78	708.81	708.83	708.85	708.88	708.90	708.92	708.95

NOTES

PROTECTIVE SURFACE TREATMENT IS APPLIED BETWEEN THE PARAPETS.

(S04) ¾" V-GROOVE REQUIRED. EXTEND V-GROOVE TO 6" FROM FRONT FACE OF ABUTMENT DIAPHRAGM.

NO.	DATE	REVISION	BY

STATE OF WISCONSIN
DEPARTMENT OF TRANSPORTATION

STRUCTURE B-30-149

DRAWN BY PFP | PLANS CK'D. SJG

SUPERSTRUCTURE SECTION

SHEET 10 OF 18
321

8

8

BILL OF BARS - SUPERSTRUCTURE

BAR MARK	COAT	NO. REQ'D.	LENGTH	BENT	BAR SERIES	LOCATION
S1001	X	140	41'-6"			SLAB BOTTOM LONGITUDINAL
S602	X	47	36'-4"			SLAB BOTTOM TRANSVERSE
S603	X	47	30'-3"			SLAB BOTTOM TRANSVERSE
S504	X	57	36'-2"			SLAB TOP TRANSVERSE
S505	X	57	30'-3"			SLAB TOP TRANSVERSE
S506	X	88	5'-0"			SLAB TOP TRANSVERSE AT EDGES
S507	X	65	44'-10"			SLAB TOP LONGITUDINAL
S508	X	130	8'-9"	X		SLAB STIRRUP AT ABUTMENTS
S509	X	130	3'-8"	X		SLAB VERTICAL AT ABUTMENTS
S410	X	130	3'-3"	X		SLAB STIRRUP AT ABUTMENTS
S511	X	138	4'-5"	X		TYPE 42SS PARAPET DOWEL
S512	X	55	4'-4"	X		TYPE A PARAPET DOWEL
S513	X	138	6'-8"	X		TYPE 42SS PARAPET STIRRUP
S514	X	55	4'-9"	X		TYPE A PARAPET STIRRUP
S515	X	24	44'-10"			PARAPET LONGITUDINAL
SS601	X	130	3'-0"			SLAB DOWEL AT APPROACH SLAB

THE FIRST DIGIT OF THE BAR MARK SIGNIFIES THE BAR SIZE.

ALL BAR BEND DIMENSIONS ARE OUT TO OUT OF BAR.

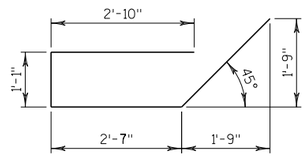

S508

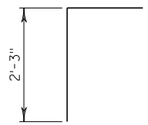

S509

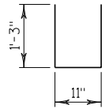

S410

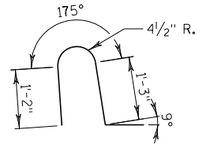

S511

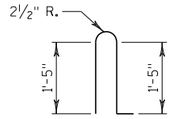

S512

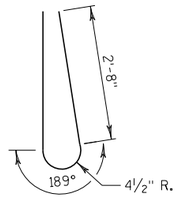

S513

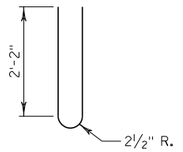

S514

8

8

NO.	DATE	REVISION	BY

STATE OF WISCONSIN
DEPARTMENT OF TRANSPORTATION

STRUCTURE B-30-149

DRAWN BY PFP | PLANS CK'D. SJG

SUPERSTRUCTURE REINFORCEMENT

SHEET 11 OF 18

322

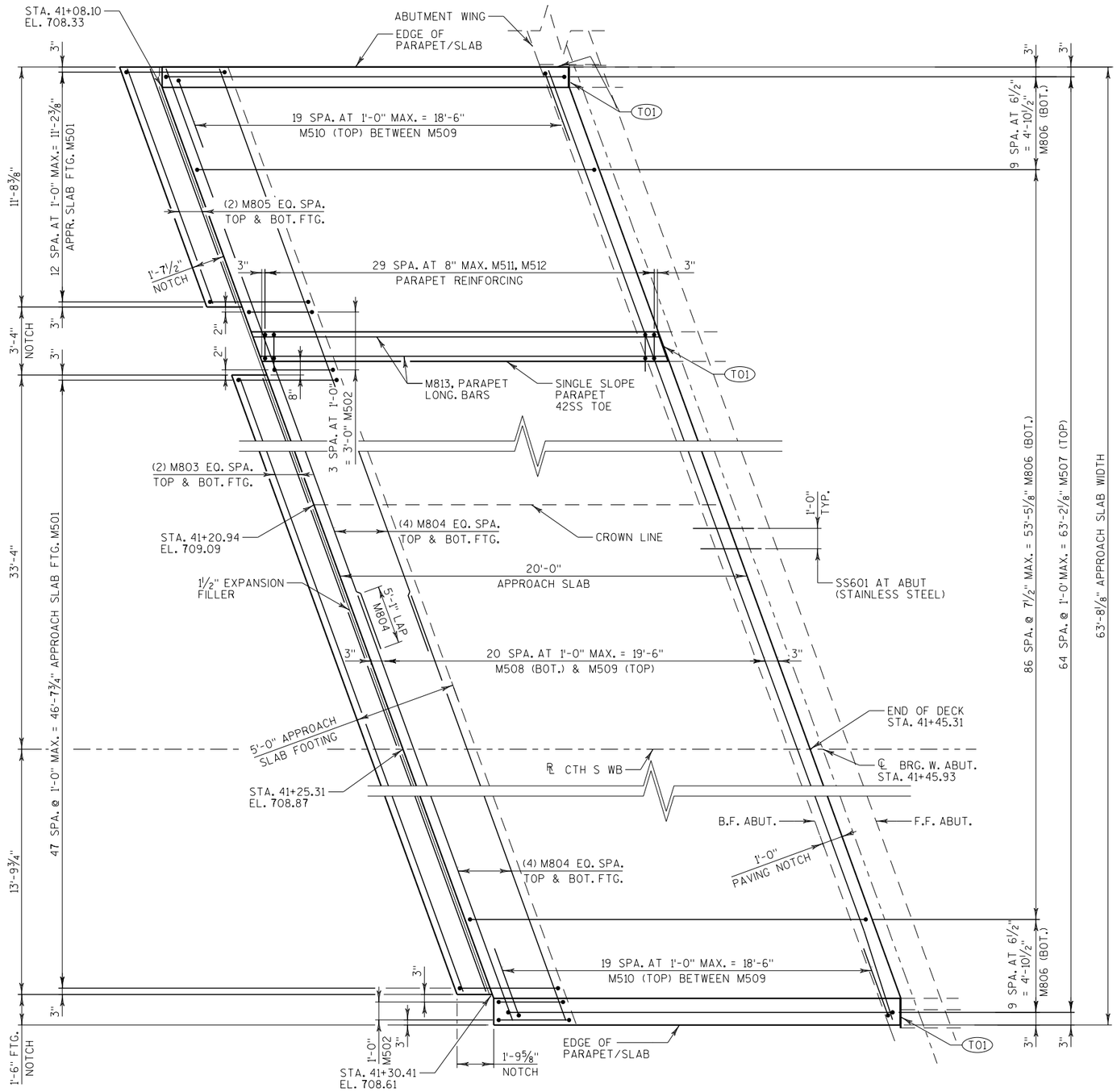

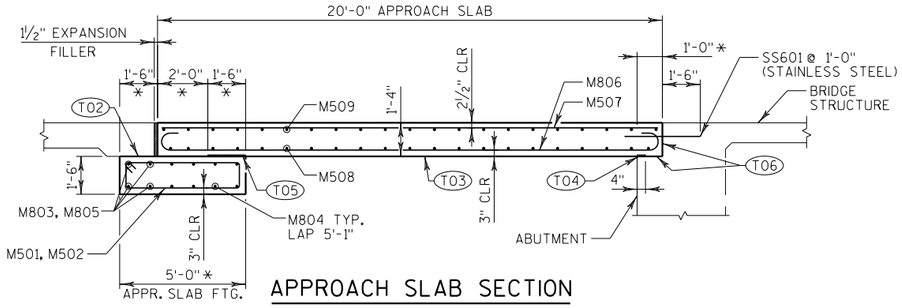

APPROACH SLAB SECTION

(LOOKING NORTH)

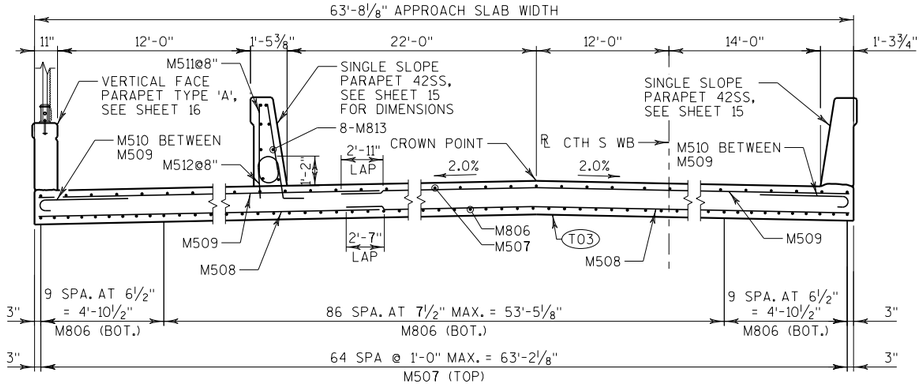

APPROACH SLAB SECTION

(LOOKING EAST)

LEGEND

* DIMENSIONS ARE GIVEN NORMAL TO THE ℄ OF THE ABUTMENTS

NOTES

(T01) SEAL ALL EXPOSED HORIZONTAL AND VERTICAL SURFACES OF ½" FILLER WITH NON-STAINING NON-BITUMINOUS JOINT SEALER. COLOR TO MATCH CONCRETE STAIN. (1" DEEP AND HOLD ⅛" BELOW SURFACE OF CONCRETE.

(T02) STEEL TROWEL TOP SURFACE OF FOOTING AND PLACE MULTIPLE LAYERS (0.03" MIN. TOTAL THK.) OF POLYETHYLENE SHEETS OVER THE ENTIRE TOP OF FOOTING.

(T03) PLACE MULTIPLE LAYERS (0.03" MIN. TOTAL THK.) OF POLYETHYLENE SHEETS OVER THE ENTIRE TOP OF SUBGRADE BENEATH SLAB.

(T04) ¾" PREFORMED JOINT FILLER ACCORDING TO STANDARD SPEC. 502.2.7 (4" WIDE X PAVING NOTCH LENGTH)

(T05) ¾" PREFORMED JOINT FILLER ACCORDING TO STANDARD SPEC. 502.2.7 (1'-6" WIDE X FTG. LENGTH)

(T06) APPLY PROTECTIVE SURFACE TREATMENT TO PAVING NOTCH PRIOR TO POURING STRUCTURAL APPROACH SLAB.

NO.	DATE	REVISION	BY

STATE OF WISCONSIN
DEPARTMENT OF TRANSPORTATION

STRUCTURE B-30-149

DRAWN BY PFP | PLANS CK'D. SJG

WEST STRUCTURAL APPROACH SLAB

SHEET 12 OF 18
323

8

8

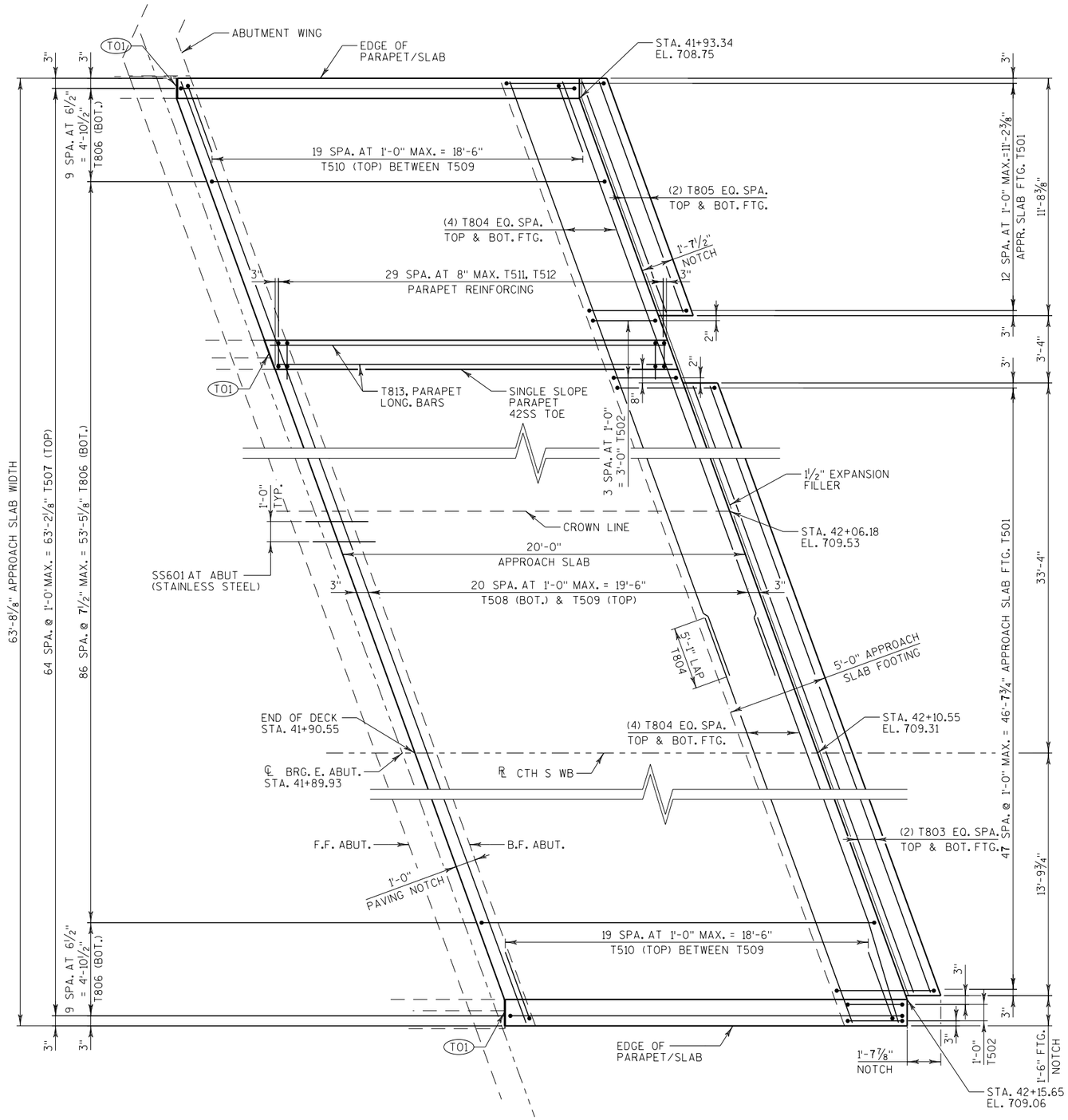

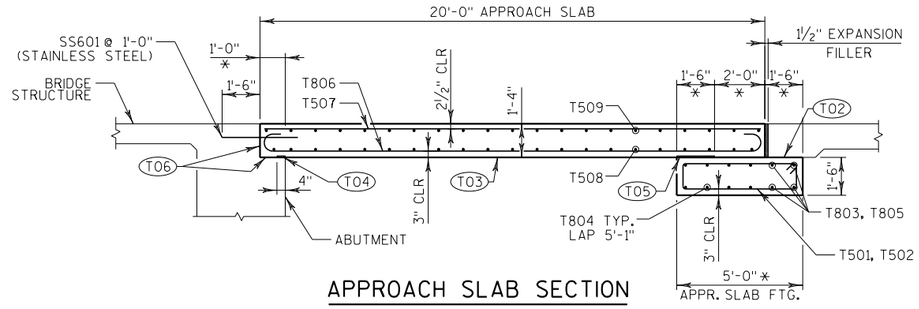

APPROACH SLAB SECTION

(LOOKING NORTH)

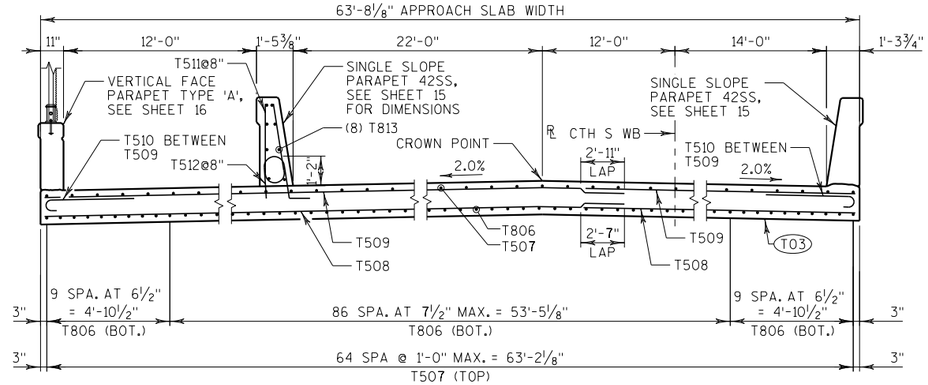

APPROACH SLAB SECTION

(LOOKING EAST)

LEGEND

* DIMENSIONS ARE GIVEN NORMAL TO THE ℄ OF THE ABUTMENT

NOTES

(T01) SEAL ALL EXPOSED HORIZONTAL AND VERTICAL SURFACES OF ½" FILLER WITH NON-STAINING NON-BITUMINOUS JOINT SEALER. COLOR TO MATCH CONCRETE STAIN. (1" DEEP AND HOLD ⅛" BELOW SURFACE OF CONCRETE.

(T02) STEEL TROWEL TOP SURFACE OF FOOTING AND PLACE MULTIPLE LAYERS (0.03" MIN. TOTAL THK.) OF POLYETHYLENE SHEETS OVER THE ENTIRE TOP OF FOOTING.

(T03) PLACE MULTIPLE LAYERS (0.03" MIN. TOTAL THK.) OF POLYETHYLENE SHEETS OVER THE ENTIRE TOP OF SUBGRADE BENEATH SLAB.

(T04) ¾" PREFORMED JOINT FILLER ACCORDING TO STANDARD SPEC. 502.2.7 (4" WIDE X PAVING NOTCH LENGTH)

(T05) ¾" PREFORMED JOINT FILLER ACCORDING TO STANDARD SPEC. 502.2.7 (1'-6" WIDE X FTG. LENGTH)

(T06) APPLY PROTECTIVE SURFACE TREATMENT TO PAVING NOTCH PRIOR TO POURING STRUCTURAL APPROACH SLAB.

NO.	DATE	REVISION	BY

STATE OF WISCONSIN
DEPARTMENT OF TRANSPORTATION

STRUCTURE B-30-149

DRAWN BY PFP | PLANS CK'D. SJG

EAST STRUCTURAL APPROACH SLAB

SHEET 13 OF 18
~~324~~

8

8

BILL OF BARS - WEST STRUCTURAL APPROACH SLAB

BAR MARK	COAT	NO. REQ'D.	LENGTH	BENT	BAR SERIES	LOCATION
M501	X	61	12'-8"	X		FOOTING STIRRUP
M502	X	6	9'-4"	X		FOOTING STIRRUP
M803	X	4	49'-10"			FOOTING LONGITUDINAL
M804	X	16	36'-3"			FOOTING LONGITUDINAL
M805	X	4	12'-1"			FOOTING LONGITUDINAL
M806	X	105	21'-6"	X		SLAB LONGITUDINAL BOTTOM
M507	X	65	19'-8"			SLAB LONGITUDINAL TOP
M508	X	42	35'-0"			SLAB TRANSVERSE BOTTOM
M509	X	42	35'-2"			SLAB TRANSVERSE TOP
M510	X	40	4'-1"	X		SLAB TRANSVERSE TOP
M511	X	30	6'-8"	X		PARAPET VERTICAL
M512	X	30	4'-5"	X		PARAPET VERTICAL
M813	X	8	19'-8"			PARAPET LONGITUDINAL
M514	X	17	4'-5"	X		PARAPET VERTICAL
M515	X	17	6'-8"	X		PARAPET VERTICAL
M516	X	12	2'-9"	X		PARAPET VERTICAL
M517	X	17	4'-4"	X		PARAPET VERTICAL
M518	X	5	6'-5"	X		PARAPET VERTICAL
M519	X	6	6'-6"	X		PARAPET VERTICAL
M520	X	1	19'-8"	X		PARAPET LONGITUDINAL
M521	X	5	19'-8"			PARAPET LONGITUDINAL
M522	X	6	5'-5"	X	Ⓧ	PARAPET VERTICAL
M523	X	2	19'-8"	X		PARAPET LONGITUDINAL
M524	X	29	4'-9"	X		PARAPET VERTICAL
M525	X	29	4'-4"	X		PARAPET VERTICAL
M526	X	8	19'-8"			PARAPET LONGITUDINAL

BILL OF BARS - EAST STRUCTURAL APPROACH SLAB

BAR MARK	COAT	NO. REQ'D.	LENGTH	BENT	BAR SERIES	LOCATION
T501	X	61	12'-8"	X		FOOTING STIRRUP
T502	X	6	9'-4"	X		FOOTING STIRRUP
T803	X	4	49'-10"			FOOTING LONGITUDINAL
T804	X	16	36'-3"			FOOTING LONGITUDINAL
T805	X	4	12'-1"			FOOTING LONGITUDINAL
T806	X	105	21'-6"	X		SLAB LONGITUDINAL BOTTOM
T507	X	65	19'-8"			SLAB LONGITUDINAL TOP
T508	X	42	35'-0"			SLAB TRANSVERSE BOTTOM
T509	X	42	35'-2"			SLAB TRANSVERSE TOP
T510	X	40	4'-1"	X		SLAB TRANSVERSE TOP
T511	X	30	6'-8"	X		PARAPET VERTICAL
T512	X	30	4'-5"	X		PARAPET VERTICAL
T813	X	8	19'-8"			PARAPET LONGITUDINAL
T514	X	17	4'-5"	X		PARAPET VERTICAL
T515	X	17	6'-8"	X		PARAPET VERTICAL
T516	X	12	2'-9"	X		PARAPET VERTICAL
T517	X	17	4'-4"	X		PARAPET VERTICAL
T518	X	5	6'-5"	X		PARAPET VERTICAL
T519	X	6	6'-6"	X		PARAPET VERTICAL
T520	X	1	19'-8"	X		PARAPET LONGITUDINAL
T521	X	5	19'-8"			PARAPET LONGITUDINAL
T522	X	6	5'-5"	X	Ⓧ	PARAPET VERTICAL
T523	X	2	19'-8"	X		PARAPET LONGITUDINAL
T524	X	29	4'-9"	X		PARAPET VERTICAL
T525	X	29	4'-4"	X		PARAPET VERTICAL
T526	X	8	19'-8"			PARAPET LONGITUDINAL

BAR SERIES TABLE

BAR MARK	NO. REQ'D.	LENGTH
M522	1 SERIES OF 6	4'-9" TO 6'-1"
T522	1 SERIES OF 6	4'-9" TO 6'-1"

BUNDLE AND TAG EACH SERIES SEPARATELY.

BENDING DIMENSIONS ARE OUT TO OUT OF BARS.

THE FIRST OR FIRST TWO DIGITS OF THE BAR MARK SIGNIFIES THE BAR SIZE.

Ⓧ LENGTH SHOWN FOR BAR IS AN AVERAGE LENGTH AND SHOULD ONLY BE USED FOR BAR WEIGHT CALCULATIONS. SEE BAR SERIES TABLE FOR ACTUAL LENGTHS.

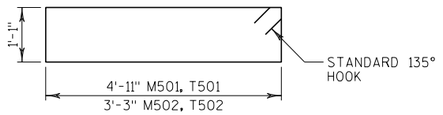

M501, M502, T501, T502

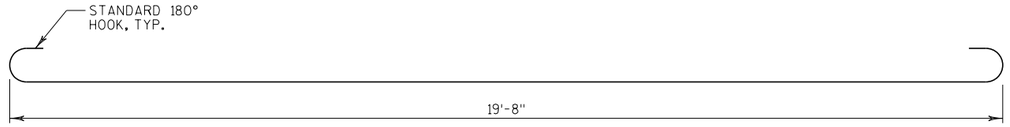

M806, T806

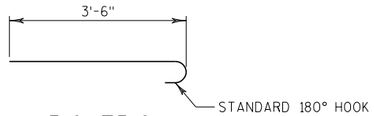

M510, T510

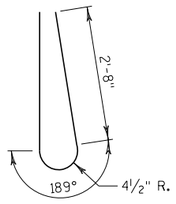

M511, T511
M515, T515

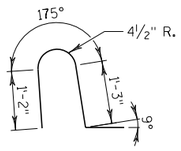

M512, T512
M514, T514

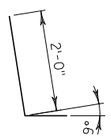

M516, T516

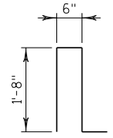

M517, T517

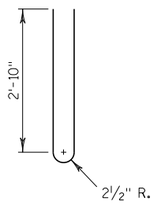

M518, T518

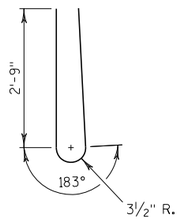

M519, T519

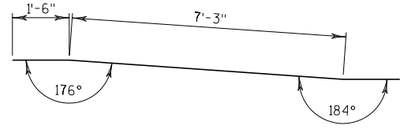

M520, T520

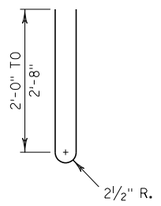

M522, T522

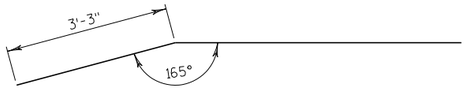

M523, T523

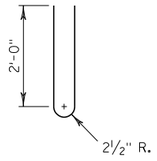

M524, T524

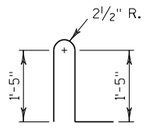

M525, T525

NO.	DATE	REVISION	BY

STATE OF WISCONSIN
DEPARTMENT OF TRANSPORTATION

STRUCTURE B-30-149

DRAWN BY PFP | PLANS CK'D. SJG

STRUCTURAL APPROACH SLAB REINFORCEMENT

SHEET 14 OF 18
~~325~~

8

8

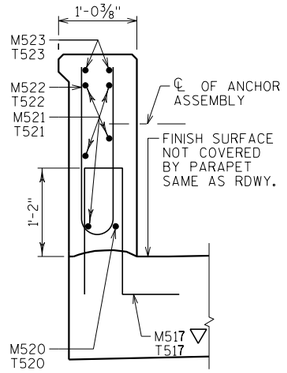

SECTION A-A

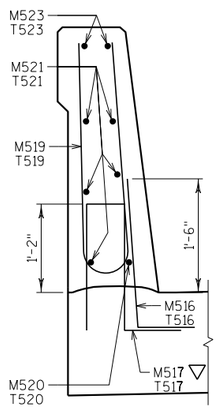

SECTION B-B

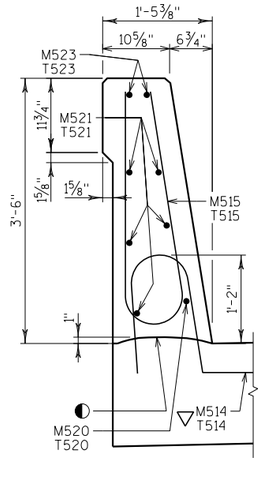

SECTION C-C

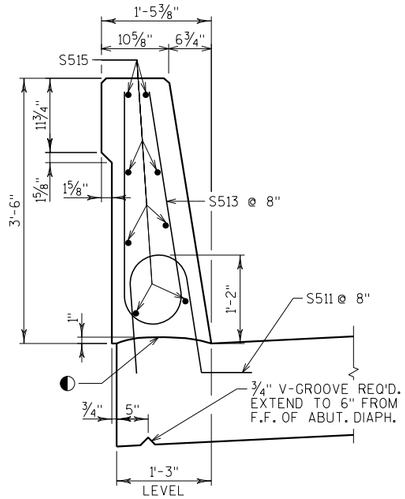

SECTION THRU PARAPET ON DECK

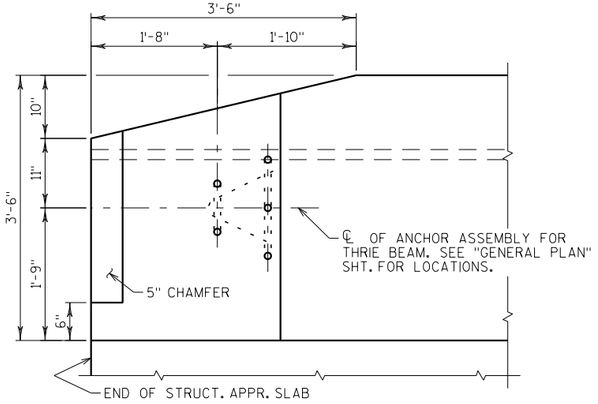

PARAPET END TREATMENT DETAIL

LOOKING AT INSIDE FACE OF PARAPET

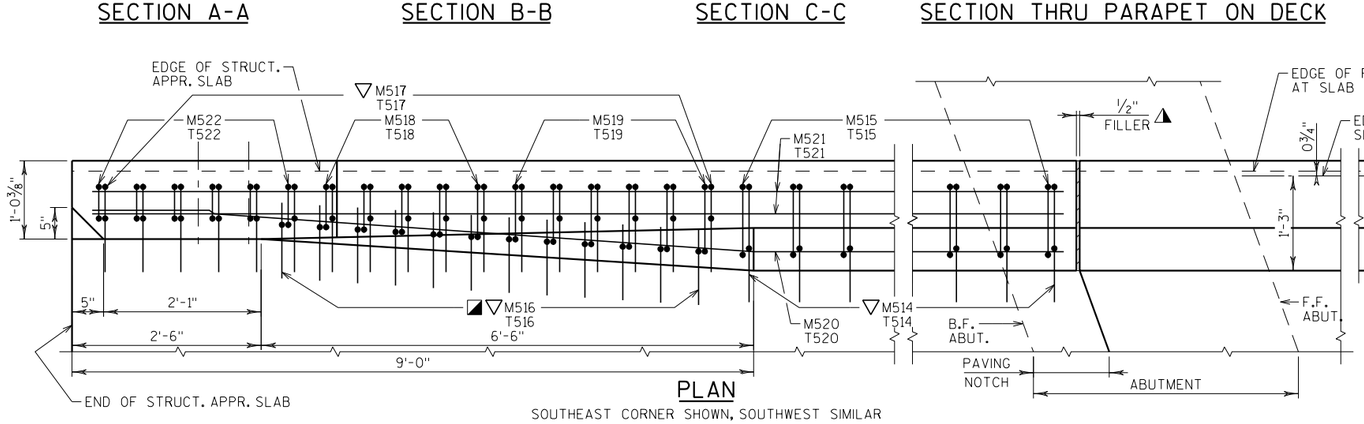

PLAN

SOUTHEAST CORNER SHOWN, SOUTHWEST SIMILAR

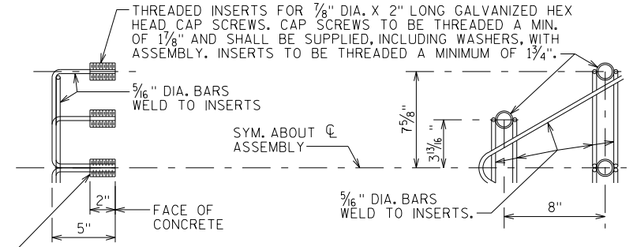

DETAIL OF ANCHOR ASSEMBLY

NOTE: HEX HEAD CAP SCREWS & WASHERS TO BE GALVANIZED IN ACCORDANCE WITH AASHTO M232 CLASS C.

ASSEMBLY BID ITEM SHALL BE "ANCHOR ASSEMBLIES FOR STEEL PLATE BEAM GUARD", EACH.

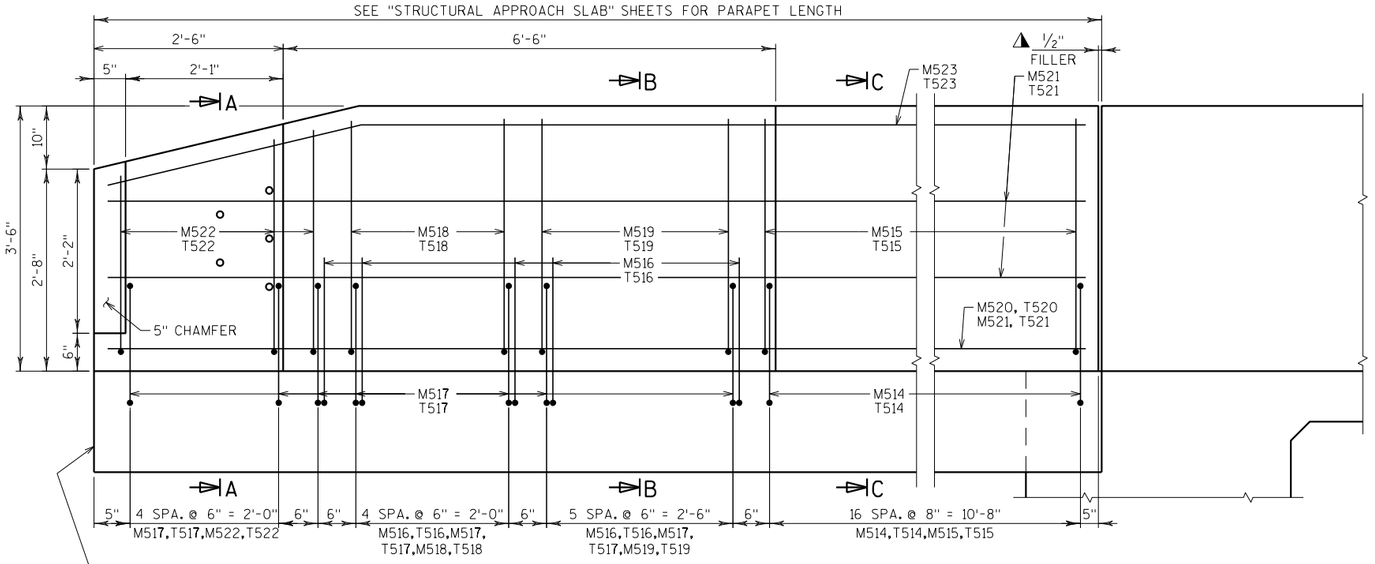

INSIDE ELEVATION

SOUTHEAST CORNER SHOWN, SOUTHWEST SIMILAR
WING & STRUCTURAL APPROACH SLAB FOOTING NOT SHOWN FOR CLARITY

△ SEAL ALL EXPOSED HORIZONTAL AND VERTICAL SURFACES OF 1/2" FILLER WITH NON-STAINING GRAY NON-BITUMINOUS JOINT SEALER. (1" DEEP AND HOLD 1/8" BELOW SURFACE OF CONCRETE).

◐ CONST. JOINT - STRIKE OFF AS SHOWN AND LEAVE ROUGH

◪ USE CARE TO PLACE M516, T516 BARS CORRECTLY ALONG TRANSITION OF PARAPET.

▽ M514, T514, M516, T516, M517, AND T517 BARS TO BE TIED TO STRUCTURAL APPROACH SLAB STEEL BEFORE STRUCTURAL APPROACH SLAB IS POURED.

NO.	DATE	REVISION	BY

STATE OF WISCONSIN
DEPARTMENT OF TRANSPORTATION

STRUCTURE B-30-149

DRAWN BY PFP | PLANS CK'D. SJG

SINGLE SLOPE PARAPET TYPE 42SS

SHEET 15 OF 18
~~326~~

8

8

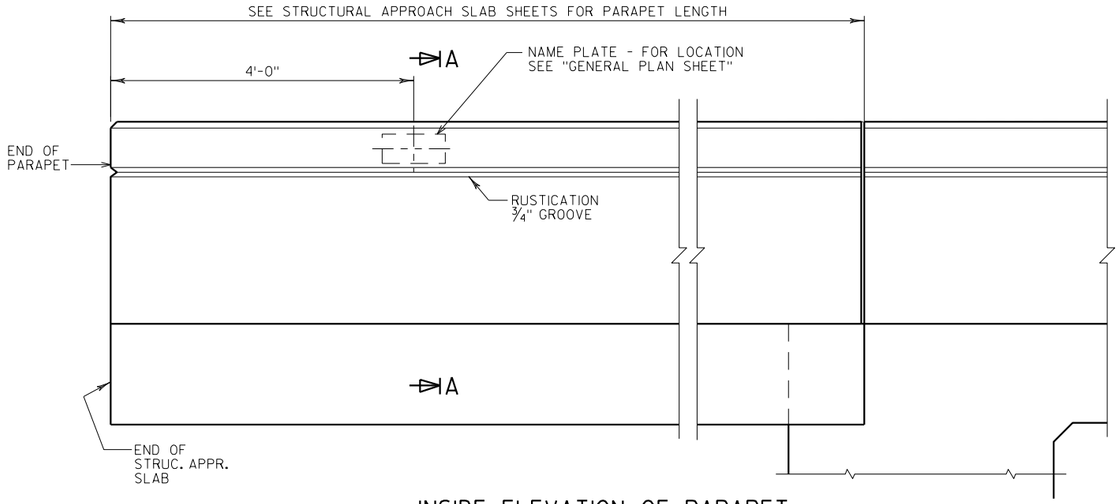

INSIDE ELEVATION OF PARAPET

NORTHWEST CORNER SHOWN, NORTHEAST SIMILAR
FENCING NOT SHOWN FOR CLARITY

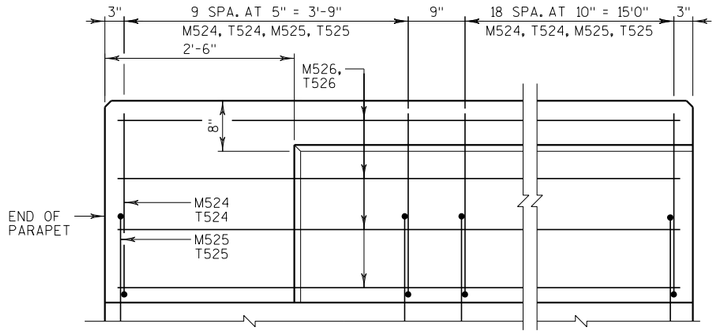

OUTSIDE ELEVATION OF PARAPET

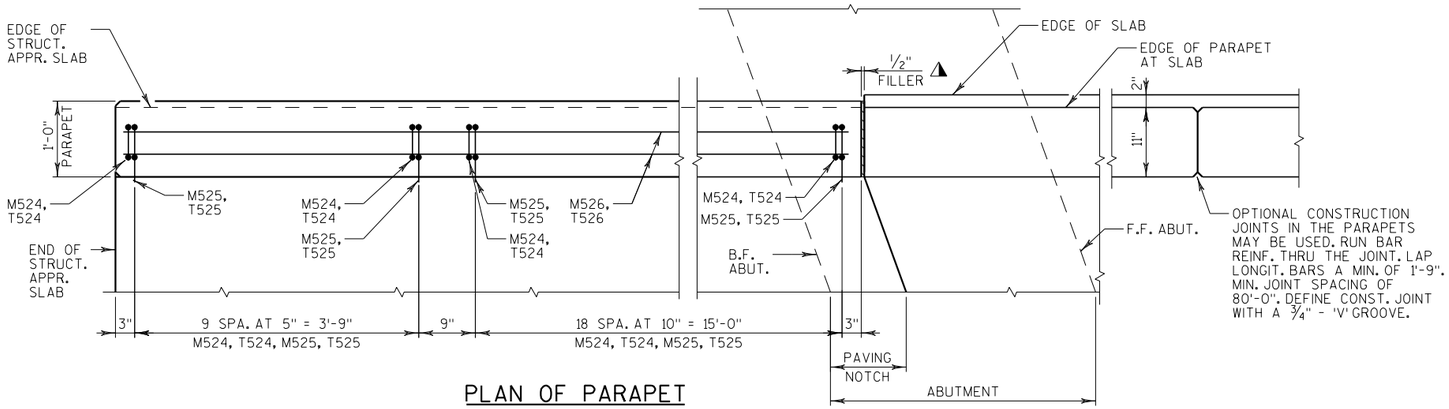

PLAN OF PARAPET

NORTHWEST CORNER SHOWN, NORTHEAST SIMILAR
WING & STRUCTURE APPROACH SLAB FOOTING NOT SHOWN FOR CLARITY

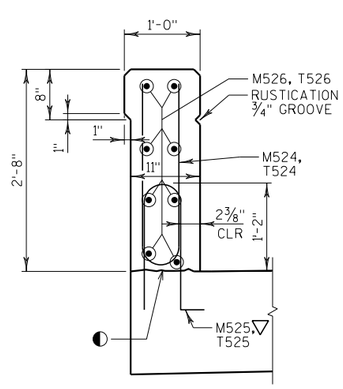

SECTION A-A

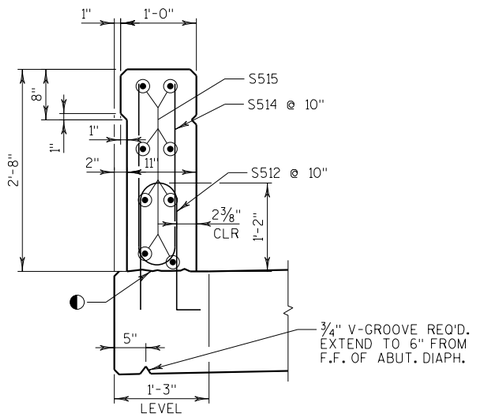

SECTION THRU PARAPET ON DECK

△ SEAL ALL EXPOSED HORIZONTAL AND VERTICAL SURFACES OF 1/2" FILLER WITH NON-STAINING GRAY NON-BITUMINUOUS JOINT SEALER. (1" DEEP AND HOLD 1/8" BELOW SURFACE OF CONCRETE).

◐ CONST. JOINT - STRIKE OFF AS SHOWN AND LEAVE ROUGH

▽ M525 AND T525 BARS TO BE TIED TO STRUCTURAL APPROACH SLAB STEEL BEFORE STRUCTURAL APPROACH SLAB IS POURED.

NO.	DATE	REVISION	BY

STATE OF WISCONSIN
DEPARTMENT OF TRANSPORTATION

STRUCTURE B-30-149

DRAWN BY PFP | PLANS CK'D. SJG

VERTICAL FACE PARAPET TYPE A

SHEET 16 OF 18
~~327~~

8

8

FENCE MEMBER SIZE & WEIGHT

STEEL FENCE MEMBER	OUTSIDE DIAMETER (INCHES)	WEIGHT (LB/FT)
RAILS	1.660	2.27
END POST	2.875	5.80
OVERHANG POST	2.875	5.80
LINE POST	2.375	3.65
POST SLEEVE	4.000	9.12

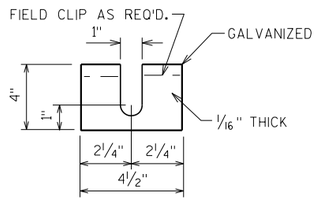

POST SHIM DETAILS

SHIMS REQUIRED ONLY WHEN END POSTS AND LINE POSTS ARE WELDED TO BASE PLATES. PROVIDE 4 SHIMS PER POST. USE WHERE REQUIRED FOR ALIGNMENT.

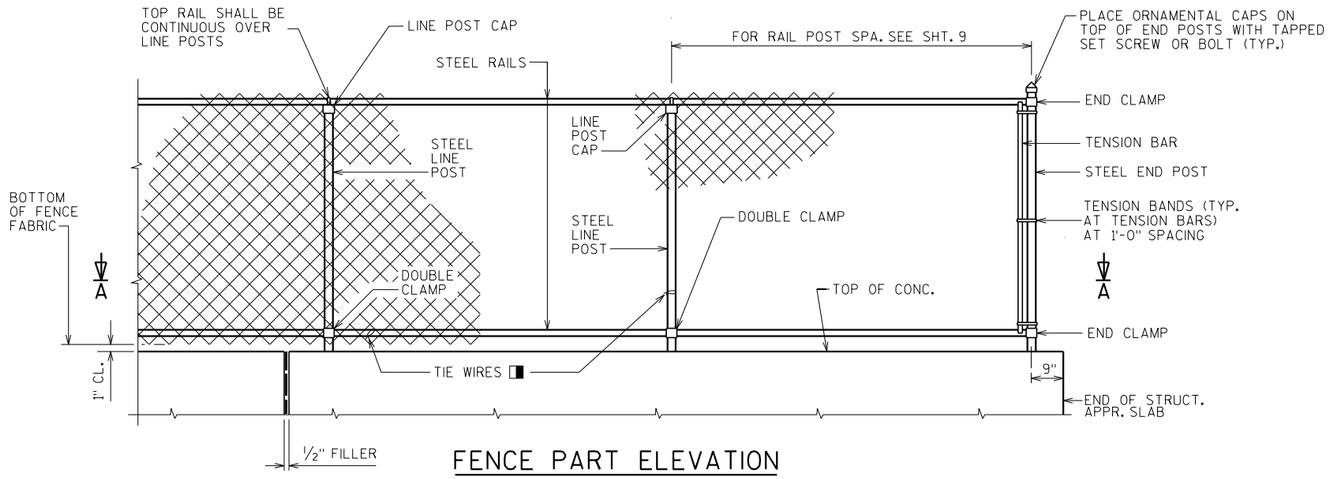

FENCE PART ELEVATION

VIEWING FABRIC SIDE

NOTES

POSTS ARE TO BE SET VERTICAL.

ALL FENCE COMPONENTS SHALL BE GALVANIZED STEEL, EXCEPT THE FENCE FABRIC WHICH MAY BE ALUMINUM-COATED STEEL OR GALVANIZED STEEL.

FABRIC SHALL CONFORM TO ASTM A491 OR A392, CLASS 2. STEEL RAILS, POSTS AND POST SLEEVES SHALL CONFORM TO ASTM F1083, STANDARD WEIGHT PIPE (SCHEDULE 40). FITTINGS SHALL CONFORM TO ASTM F626.

THE BID ITEM SHALL BE "FENCE CHAIN LINK 6-FT."

COMPLETE ANY REQUIRED WELDING OF COMPONENTS BEFORE GALVANIZING.

POST BASE PLATES SHALL BE FLAT WITH ALL SURFACES SMOOTH AND FREE FROM WARP AND ALL EDGES SMOOTH, STRAIGHT AND VERTICAL. ALL PLATE CUTS SHALL BE MACHINE OR MACHINE FLAME CUT.

BASE PLATES, ANCHOR PLATES AND SHIMS SHALL BE ASTM A709, GRADE 36.

ALL POST SPACINGS ARE MEASURED HORIZONTALLY ALONG THE ℄ OF THE POST.

◪ CAULK AROUND PERIMETER OF BASE PLATE AND FILL PORTION OF SLOTTED HOLE AROUND ANCHOR BOLT IN SHIM WITH NON-STAINING GRAY NON-BITUMINOUS JOINT SEALER.

⚹ ALTERNATE TO DOUBLE CLAMP: USE LINE RAIL CLAMP (BOULEVARD) OR 180° BRACE BAND, WHICH MAY BE USED WHEN THE POSTS ARE EITHER BOLTED TO THE POST SLEEVES OR DIRECTLY WELDED TO THE BASE PLATE.

◭ 1/2" DIA. X 6 7/8" LONG GALVANIZED HEX BOLT WITH NUT & WASHER. ☆

☆ ALTERNATIVE ANCHORAGE: CONCRETE ADHESIVE ANCHORS 1/2-INCH. EMBED 7" IN CONCRETE. ADHESIVE ANCHORS SHALL CONFORM TO SECTION 502.2.12 OF THE STANDARD SPECIFICATIONS.

◨ ATTACH FABRIC TO RAILS, AND TO POSTS WITHOUT TENSION BANDS, WITH TIE WIRES (ROUND, 9-GAGE) SPACED AT 1'-0".

◹ BOLT RAIL TO RAIL END TO SECURE OVERHANG SECTION. ALTERNATE IS TO WELD RAIL DIRECTLY TO END POST.

MINIMUM LENGTH OF TOP RAIL BETWEEN SPLICES SHALL BE 20'-0". LOCATE SPLICES NEAR 1/4 POINT OF POST SPACING.

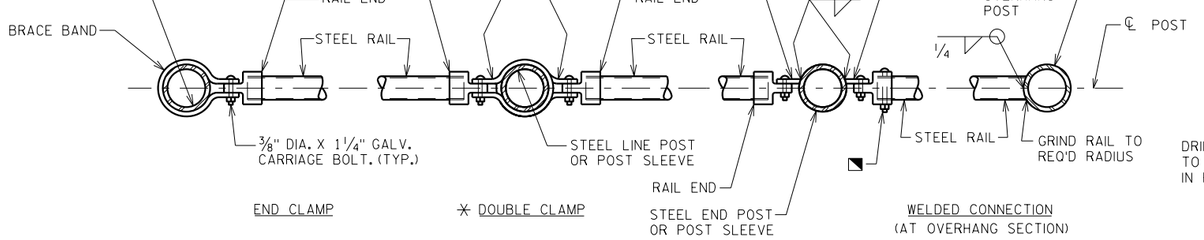

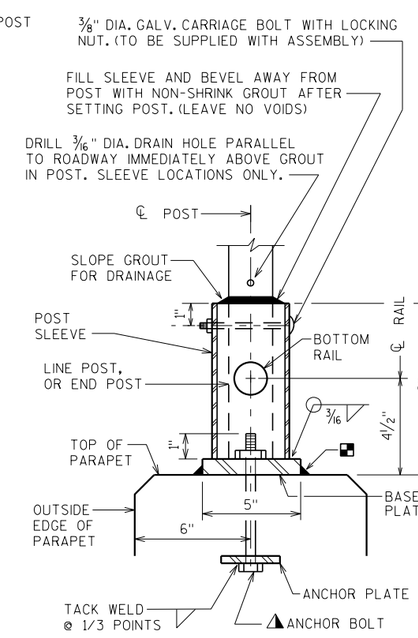

SECTION A-A

NOTE: PLACE ALL BOLT HEADS ON SIDE OF FENCE ADJACENT TO PEDESTRIANS

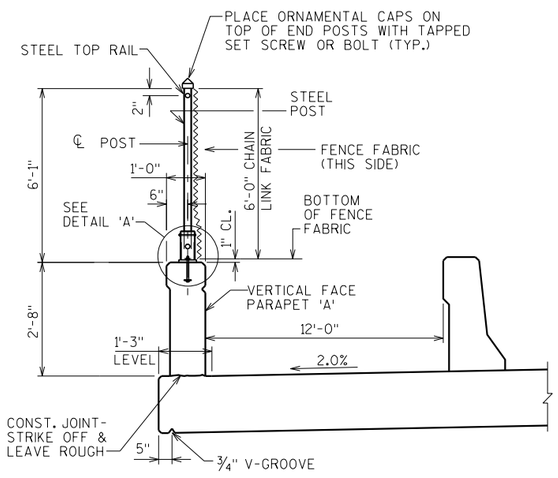

SECTION THRU FENCE

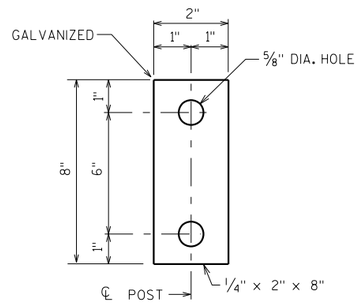

ANCHOR PLATE

☆NOTE: ANCHOR PLATE NOT REQUIRED WHEN ADHESIVE ANCHORS ARE USED.

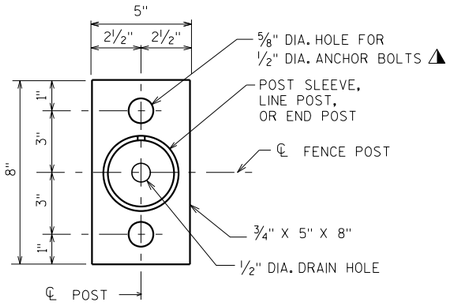

BASE PLATE

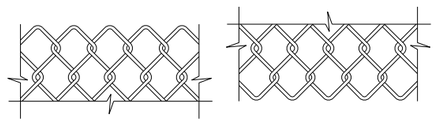

FENCE FABRIC

FENCE FABRIC WOVEN OF 9-GAGE WIRE IN 2" DIAMOND PATTERN MESH WITH BOTH THE TOP AND BOTTOM SELVAGES KNUCKLED.

DETAIL 'A'

UNIT SHALL BE GALVANIZED AFTER FABRICATION

NOTE: IN LIEU OF USING THE POST SLEEVE, THE FENCE POST MAY BE WELDED TO THE BASE PLATE.

NO.	DATE	REVISION	BY

STATE OF WISCONSIN
DEPARTMENT OF TRANSPORTATION

STRUCTURE B-30-149

DRAWN BY PFP | PLANS CK'D. SJG

FENCING DETAILS

SHEET 17 OF 18
328

8

8

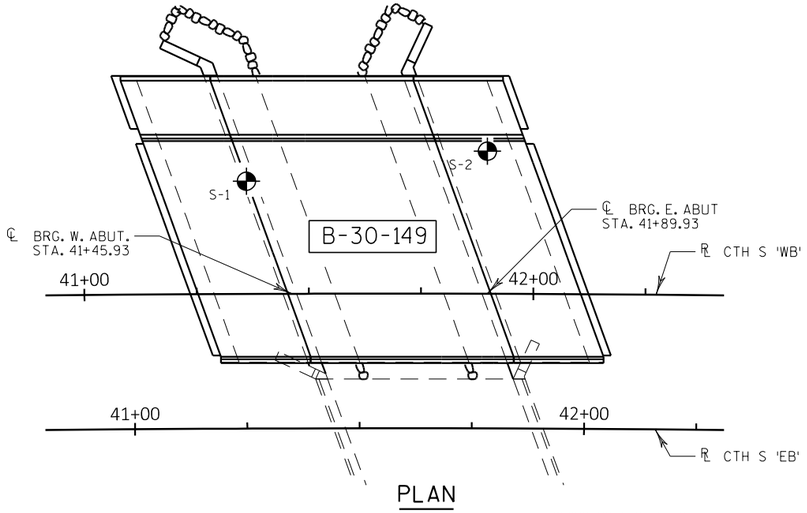

PLAN

BORING #	DATE COMPLETED	NORTHING (Y)	EASTING (X)
S-1	OCTOBER 30, 2017	229,762.38	2,554,083.71
S-2	OCTOBER 30, 2017	229,748.61	2,554,136.30
BORINGS COMPLETED BY: PROFESSIONAL SERVICE INDUSTRIES, INC.			
REPORT COMPLETED BY: PROFESSIONAL SERVICE INDUSTRIES, INC.			
ALL COORDINATES REFERENCED TO WISCONSIN STATE PLAN COORDINATE SYSTEM, NAD27 SOUTH ZONE			

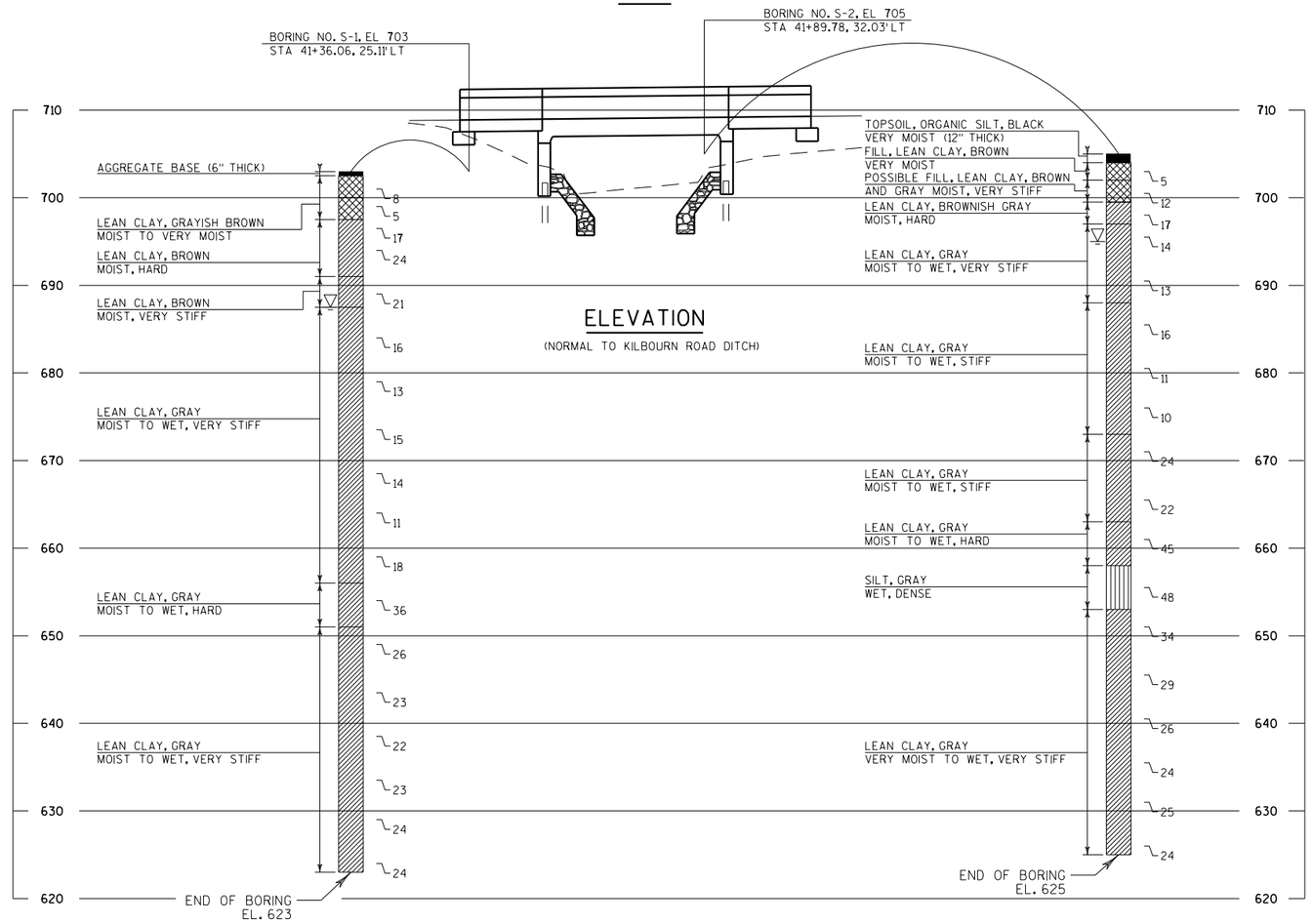

ELEVATION

(NORMAL TO KILBOURN ROAD DITCH)

MATERIAL SYMBOLS

ASPHALT	TOPSOIL	PEAT
CONCRETE	FILL	GRAVEL
SAND	CLAY	SILT
BOULDERS OR COBBLES	LIMESTONE	BEDROCK (UNKNOWN)
SHALE	SANDSTONE	IGNEOUS/ META

LEGEND OF BORING

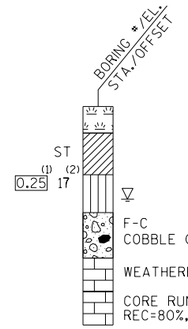

(1) UNCONFINED STRENGTH, AS DETERMINED BY A POCKET PENETROMETER (TSF)

(2) UNLESS OTHERWISE, SPECIFIED THE SPT 'N' VALUE IS BASED ON AASHTO T-206, STANDARD PENETRATION TEST. THE SPT 'N' VALUE PRESENTED HAS NOT BEEN CORRECTED FOR OVERBURDEN PRESSURE OR HAMMER EFFICIENCY.

GROUND WATER ELEVATION

- ▽ AT TIME OF DRILLING
- ▼ END OF DRILLING
- ▽ AFTER DRILLING

ABBREVIATIONS

F-FINE M-MEDIUM C-COARSE ST-SHELBY TUBE

SUBSURFACE EXPLORATION FOR FOUNDATION DESIGN AND BIDDERS INFORMATION

BORINGS WERE COMPLETED AT POINTS APPROXIMATELY AS INDICATED ON THIS DRAWING TO OBTAIN INFORMATION CONCERNING THE CHARACTER OF SUBSURFACE MATERIALS FOUND AT THE SITE. BECAUSE THE INVESTIGATED DEPTHS ARE LIMITED AND THE AREA OF THE BORINGS IS VERY SMALL IN RELATION TO THE ENTIRE SITE, THE WISCONSIN DEPARTMENT OF TRANSPORTATION DOES NOT WARRANT SIMILAR SUBSURFACE CONDITIONS BELOW, BETWEEN, OR BEYOND THESE BORINGS. VARIATIONS IN SOIL CONDITIONS SHOULD BE EXPECTED AND FLUCTUATIONS IN GROUNDWATER LEVELS MAY OCCUR.

NO.	DATE	REVISION	BY

STATE OF WISCONSIN
DEPARTMENT OF TRANSPORTATION

STRUCTURE B-30-149

DRAWN BY PFP | PLANS CK'D. SJG

SUBSURFACE EXPLORATION

SHEET 18 OF 18
~~329~~

8

8

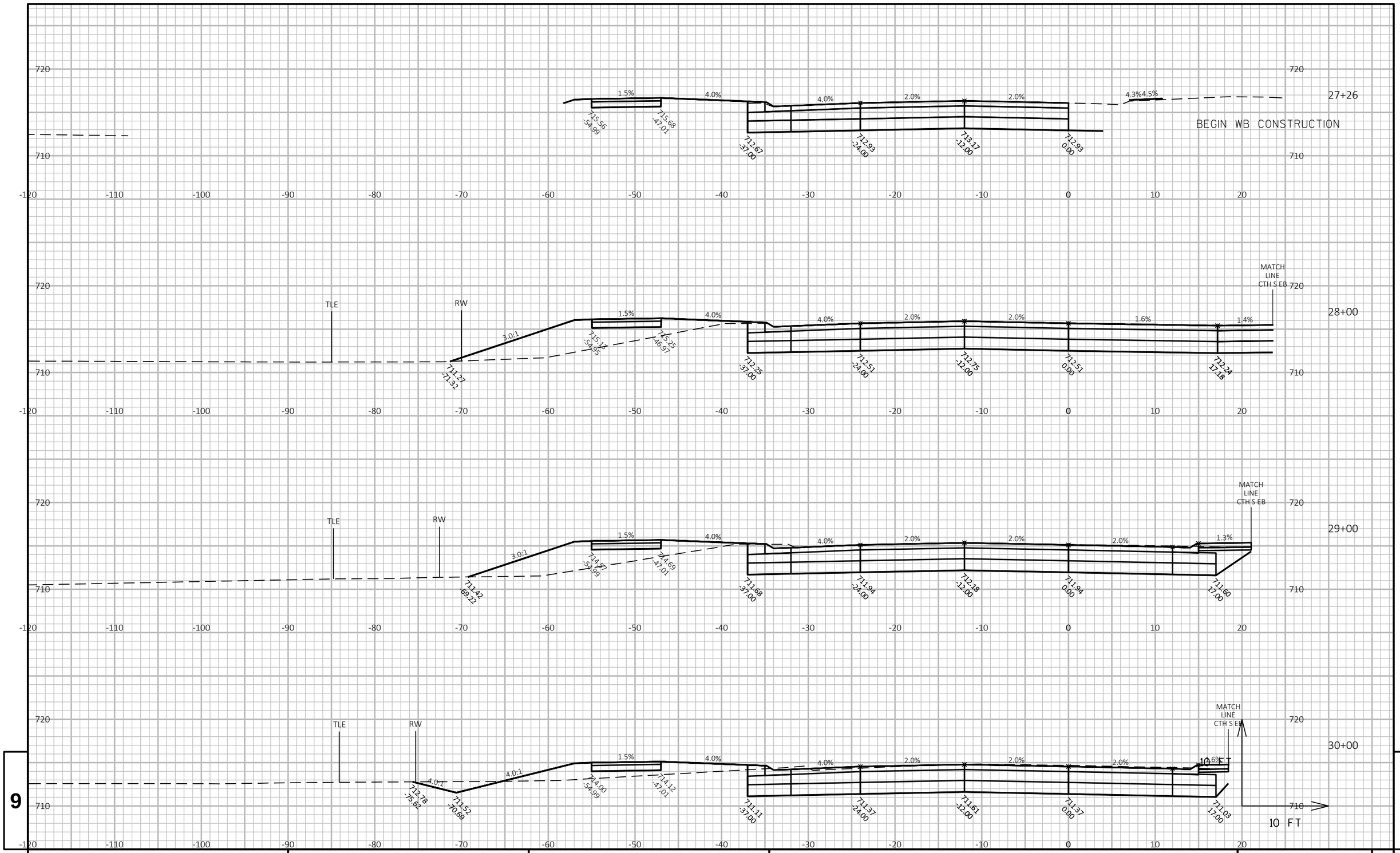

9	PROJECT ID: RD16-003	HWY: CTH S	COUNTY: KENOSHA	CROSS SECTIONS: CTH S WESTBOUND	SHEET 330 E

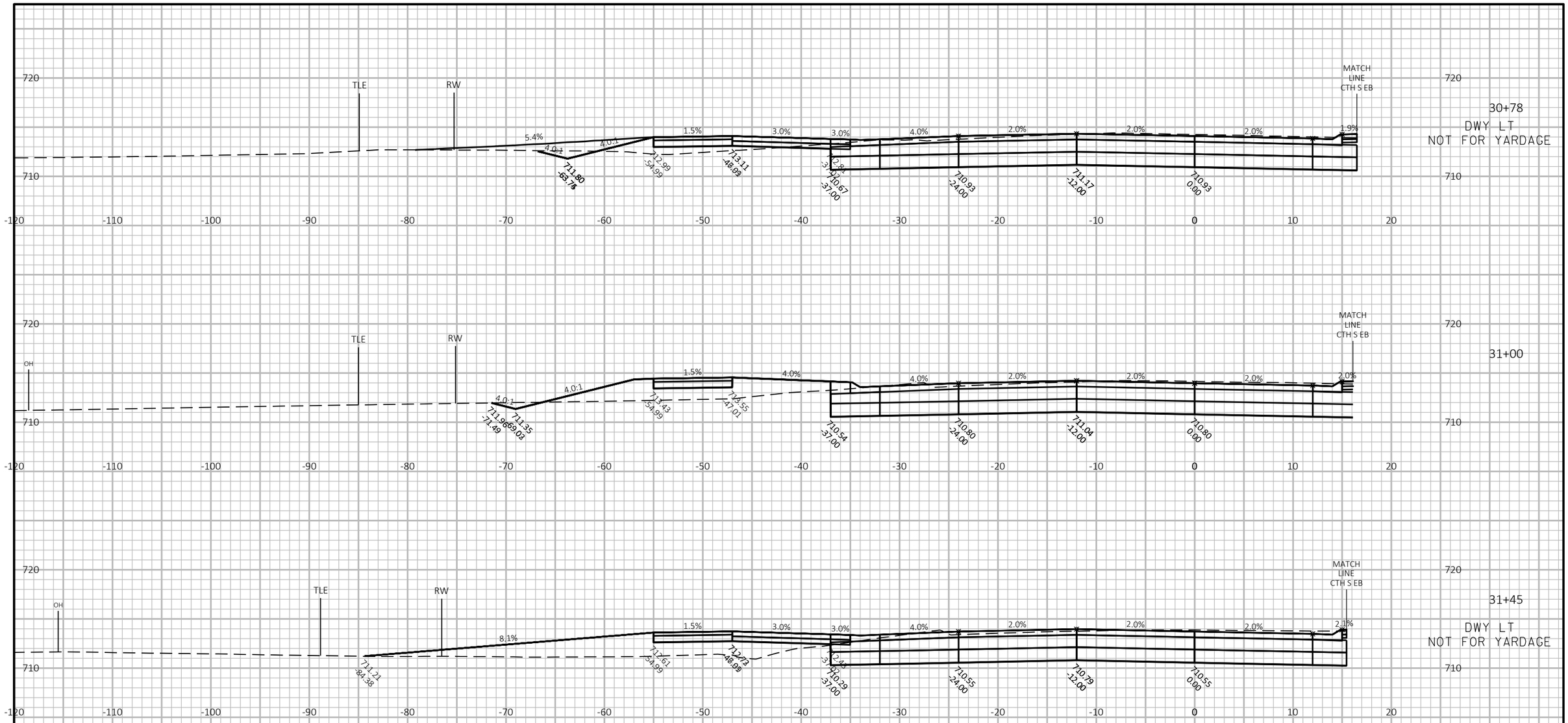

9

9

PROJECT ID: RD16-003	HWY: CTH S	COUNTY: KENOSHA	CROSS SECTIONS: CTH S WESTBOUND	SHEET 331	E

FILE NAME : T:\1165811\CIVIL3D\1165811\SHEETSPLAN\090202-XS.DWG PLOT DATE : 5/12/2020 8:23 AM PLOT BY : GUILLAMA, TINA PLOT NAME :

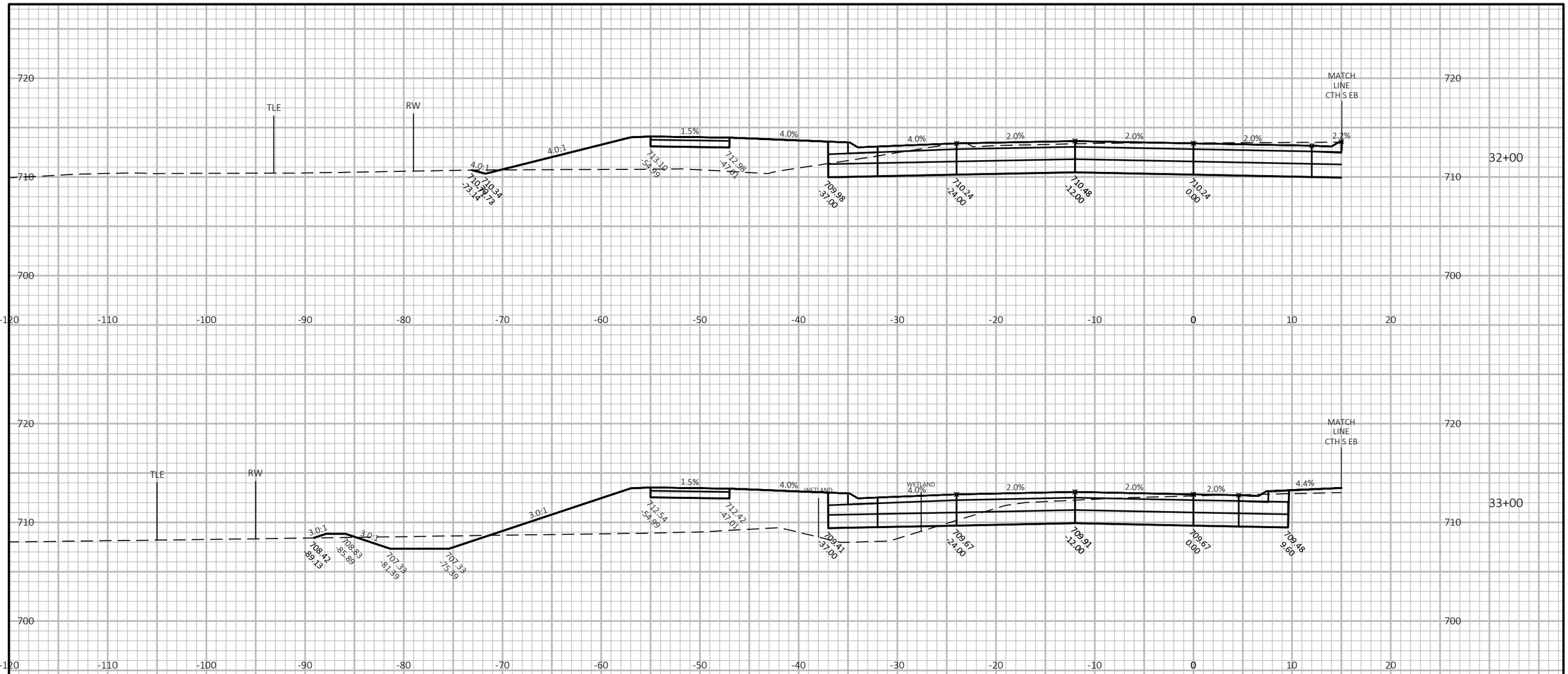

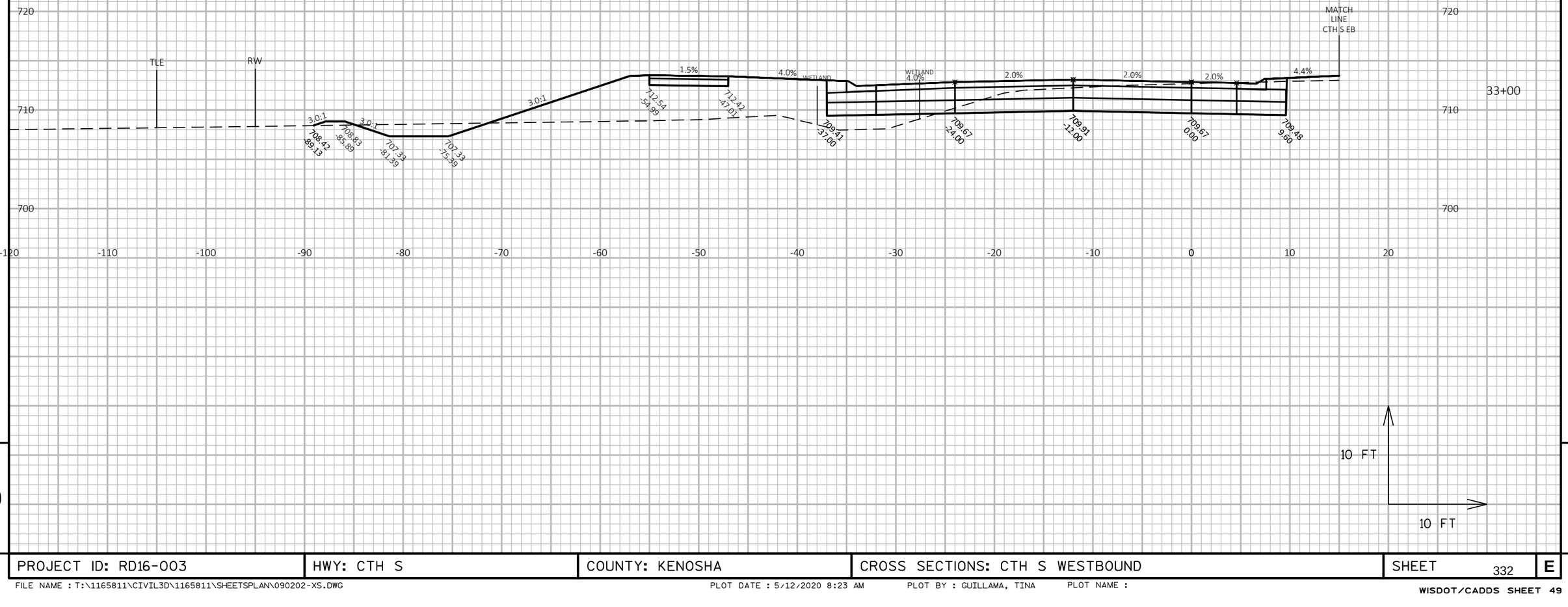

9

9

PROJECT ID: RD16-003	HWY: CTH S	COUNTY: KENOSHA	CROSS SECTIONS: CTH S WESTBOUND	SHEET 332	E

FILE NAME : T:\1165811\CIVIL3D\1165811\SHEETSPLAN\090202-XS.DWG PLOT DATE : 5/12/2020 8:23 AM PLOT BY : GUILLAMA, TINA PLOT NAME :

WISDOT/CADDS SHEET 49

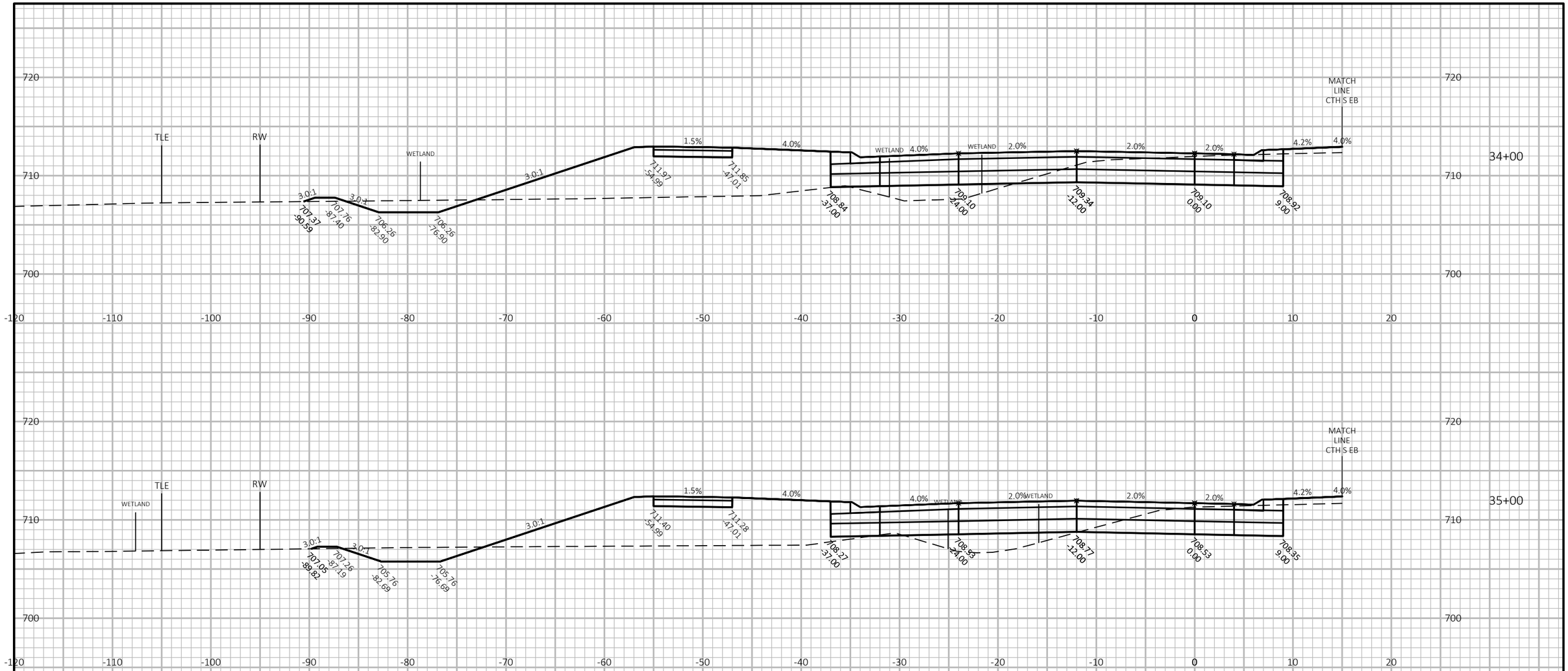

9

9

PROJECT ID: RD16-003	HWY: CTH S	COUNTY: KENOSHA	CROSS SECTIONS: CTH S WESTBOUND	SHEET 333	E

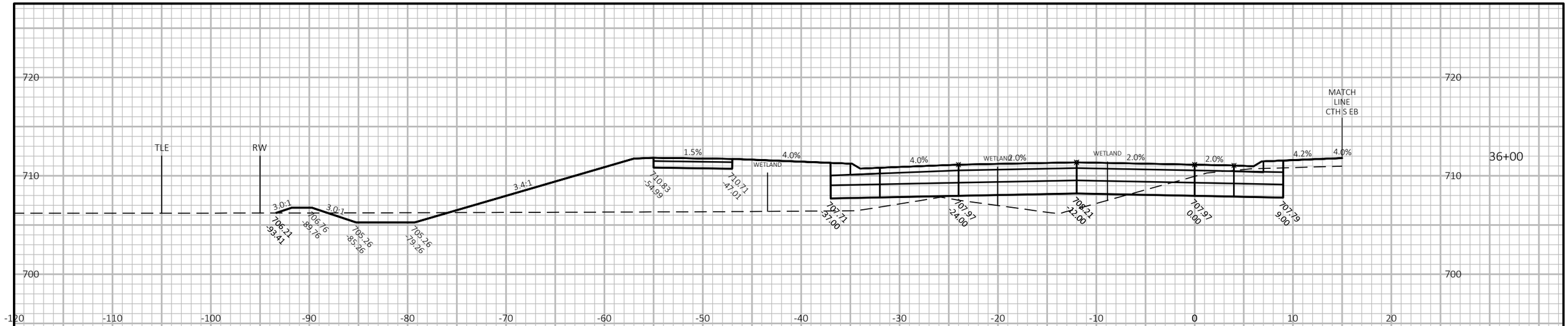

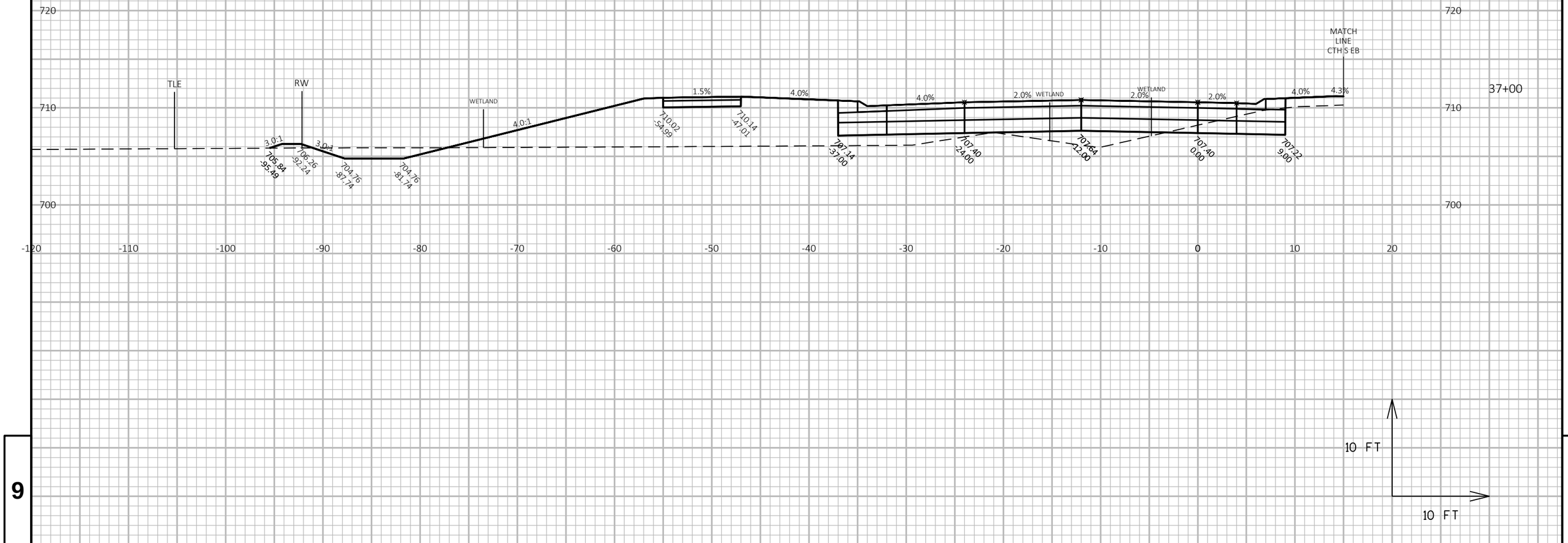

9

9

PROJECT ID: RD16-003	HWY: CTH S	COUNTY: KENOSHA	CROSS SECTIONS: CTH S WESTBOUND	SHEET 334	E

FILE NAME : T:\1165811\CIVIL3D\1165811\SHEETSPLAN\090202-XS.DWG PLOT DATE : 5/12/2020 8:23 AM PLOT BY : GUILLAMA, TINA PLOT NAME :

WISDOT/CADDS SHEET 49

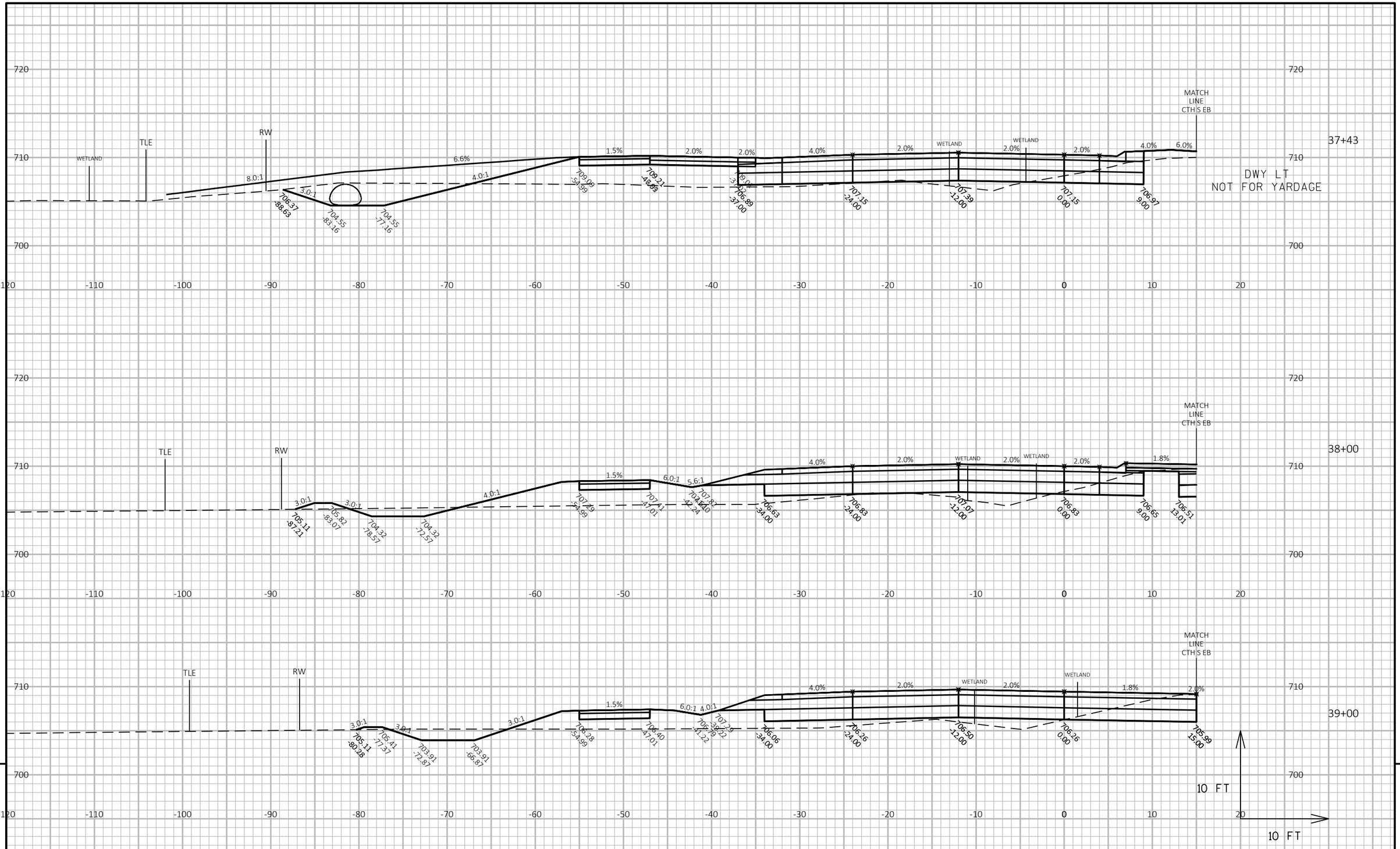

PROJECT ID: RD16-003	HWY: CTH S	COUNTY: KENOSHA	CROSS SECTIONS: CTH S WESTBOUND	SHEET 335	E

FILE NAME : T:\1165811\CIVIL3D\1165811\SHEETSPLAN\090202-XS.DWG PLOT DATE : 5/12/2020 8:23 AM PLOT BY : GUILLAMA, TINA PLOT NAME :

WISDOT/CADDS SHEET 49

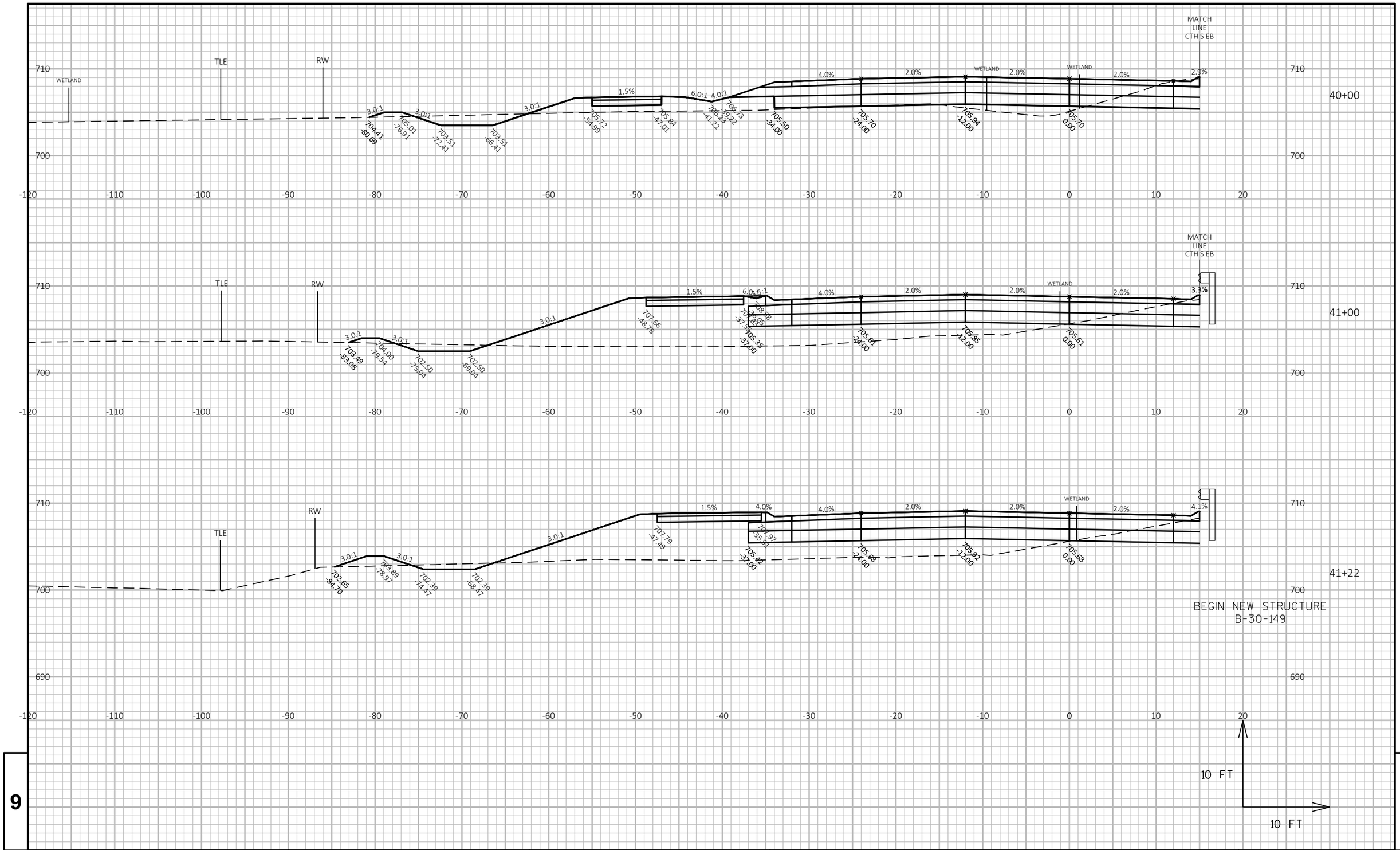

9

9

PROJECT ID: RD16-003	HWY: CTH S	COUNTY: KENOSHA	CROSS SECTIONS: CTH S WESTBOUND	SHEET 336	E

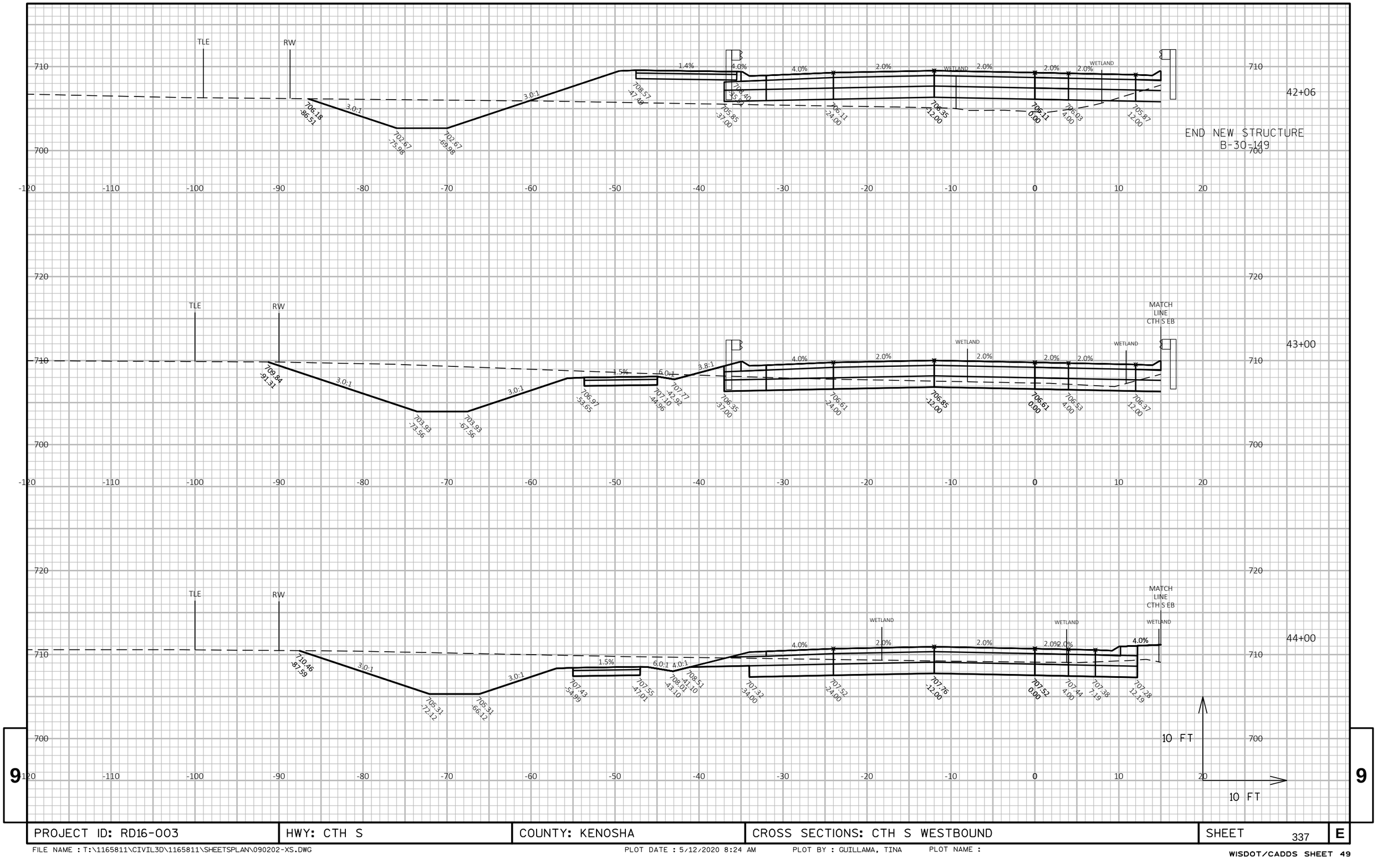

PROJECT ID: RD16-003	HWY: CTH S	COUNTY: KENOSHA	CROSS SECTIONS: CTH S WESTBOUND	SHEET 337	E

FILE NAME : T:\1165811\CIVIL3D\1165811\SHEETSPLAN\090202-XS.DWG PLOT DATE : 5/12/2020 8:24 AM PLOT BY : GUILLAMA, TINA PLOT NAME :

WISDOT/CADDS SHEET 49

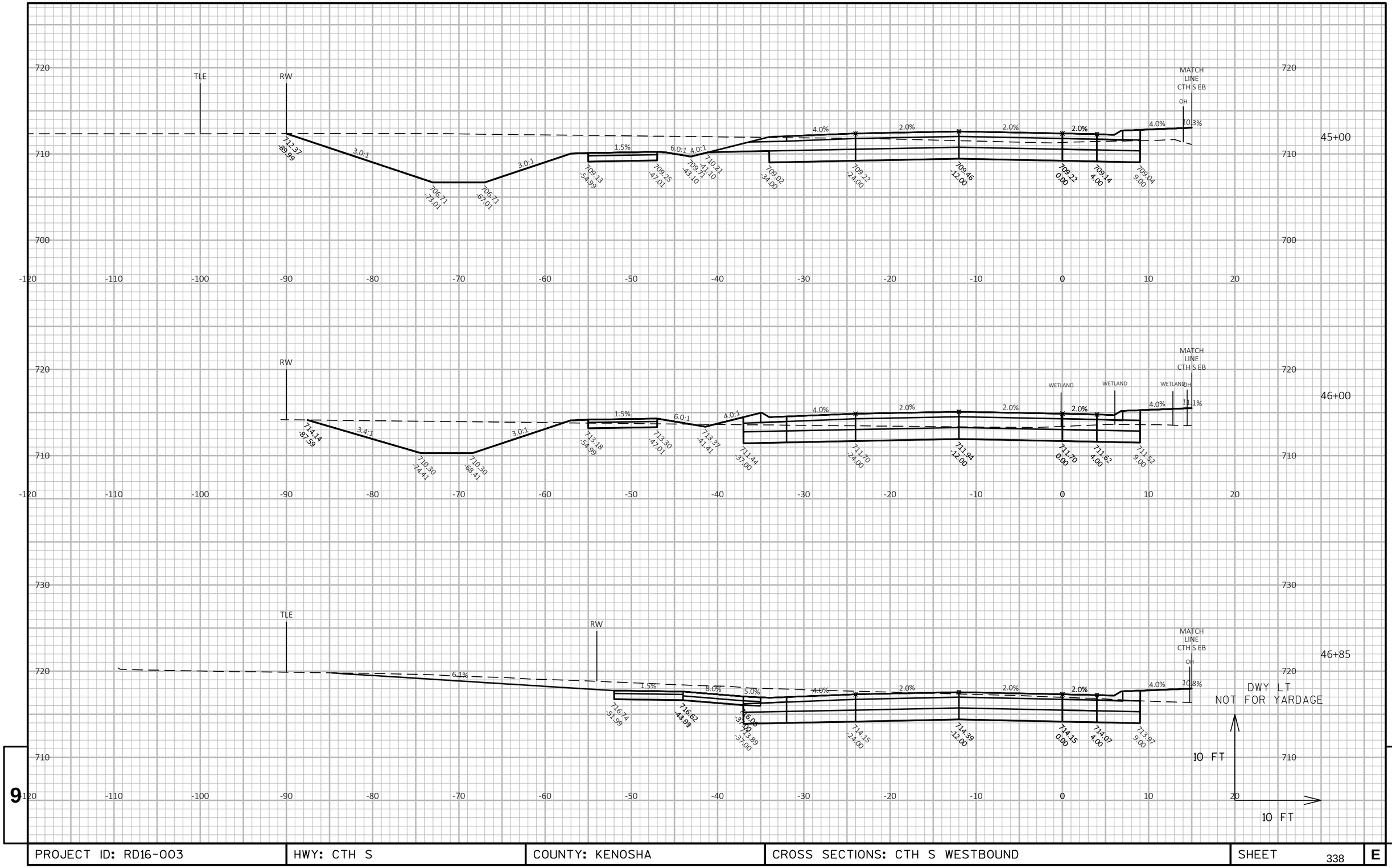

PROJECT ID: RD16-003	HWY: CTH S	COUNTY: KENOSHA	CROSS SECTIONS: CTH S WESTBOUND	SHEET 338	E

FILE NAME : T:\1165811\CIVIL3D\1165811\SHEETSPLAN\090202-XS.DWG PLOT DATE : 5/12/2020 8:24 AM PLOT BY : GUILLAMA, TINA PLOT NAME :

WISDOT/CADDS SHEET 49

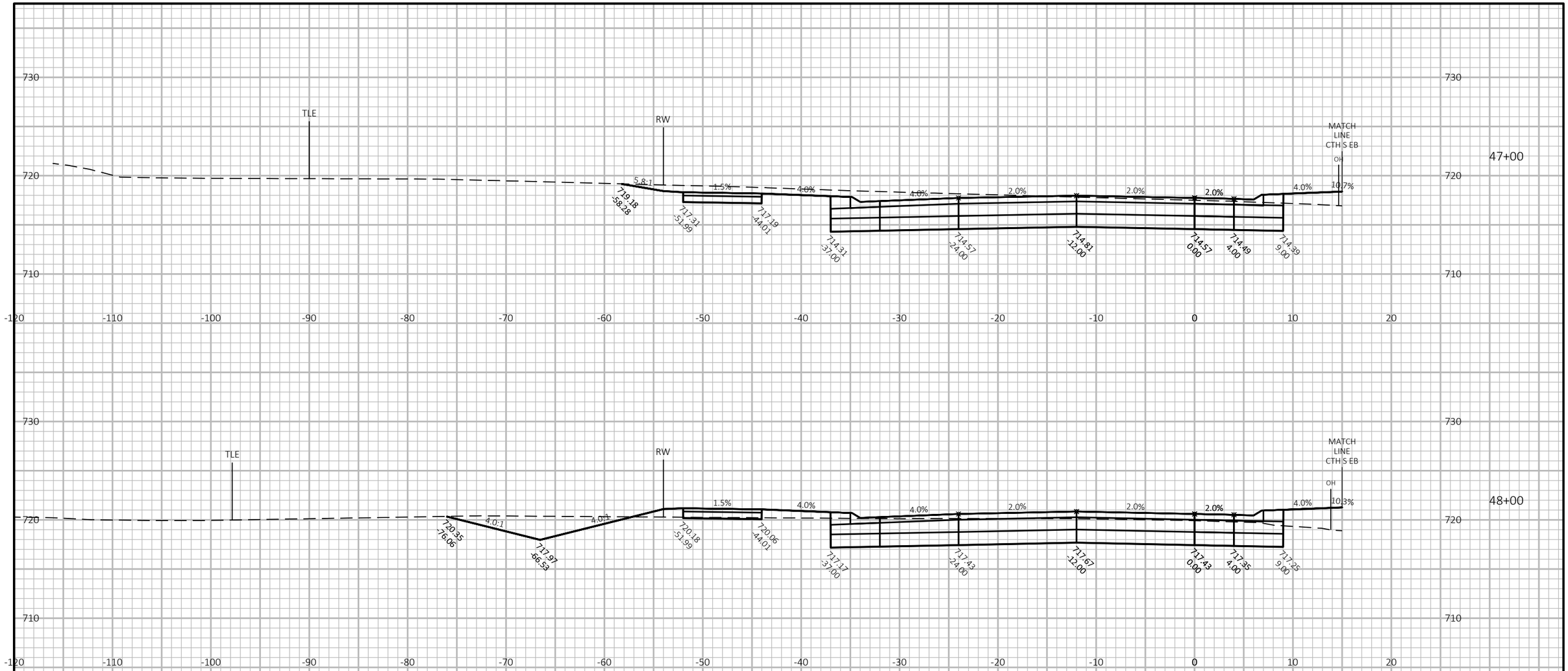

9

9

PROJECT ID: RD16-003	HWY: CTH S	COUNTY: KENOSHA	CROSS SECTIONS: CTH S WESTBOUND	SHEET 339	E

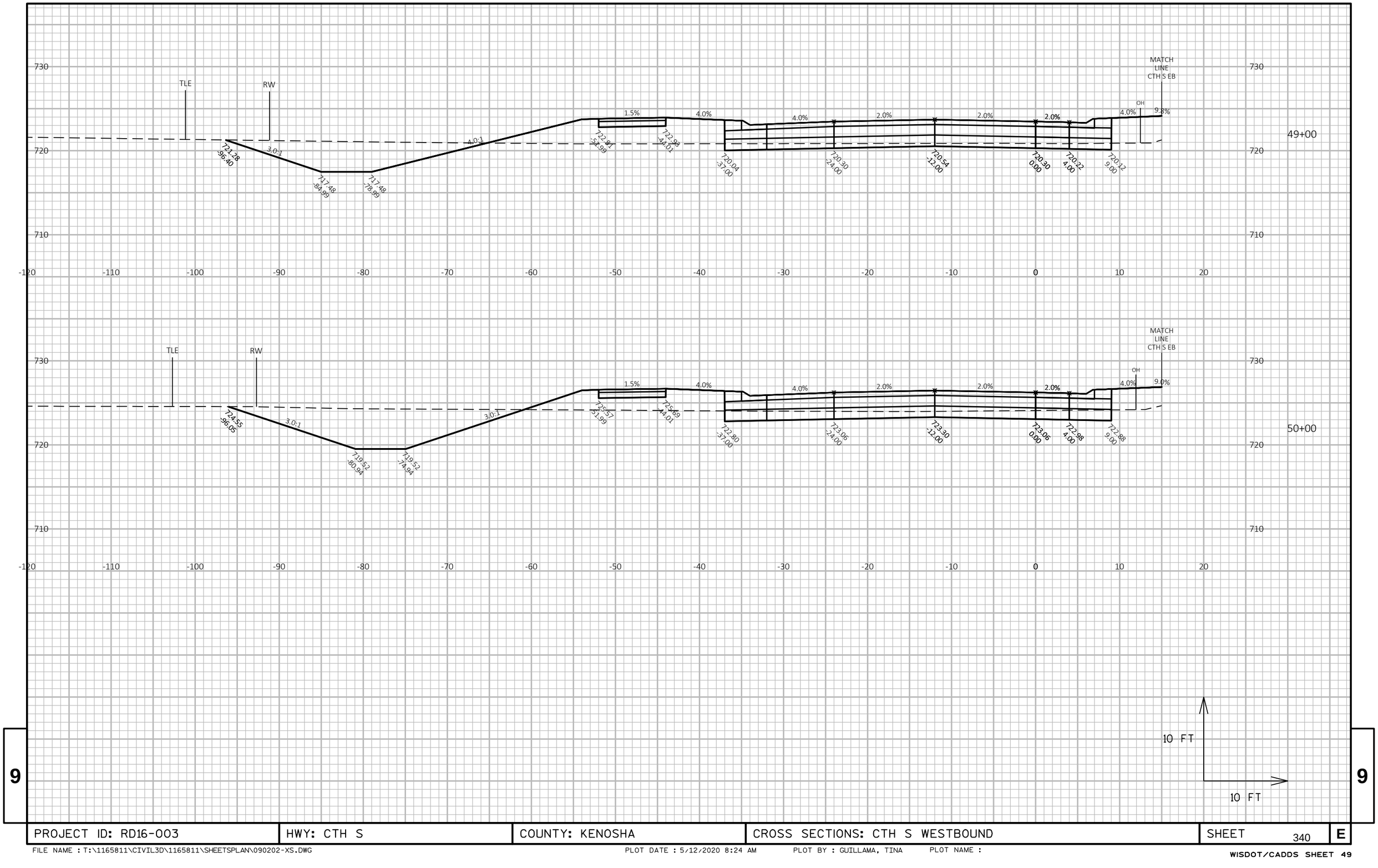

PROJECT ID: RD16-003	HWY: CTH S	COUNTY: KENOSHA	CROSS SECTIONS: CTH S WESTBOUND	SHEET 340	E

FILE NAME : T:\1165811\CIVIL3D\1165811\SHEETSPLAN\090202-XS.DWG PLOT DATE : 5/12/2020 8:24 AM PLOT BY : GUILLAMA, TINA PLOT NAME :

WISDOT/CADDS SHEET 49

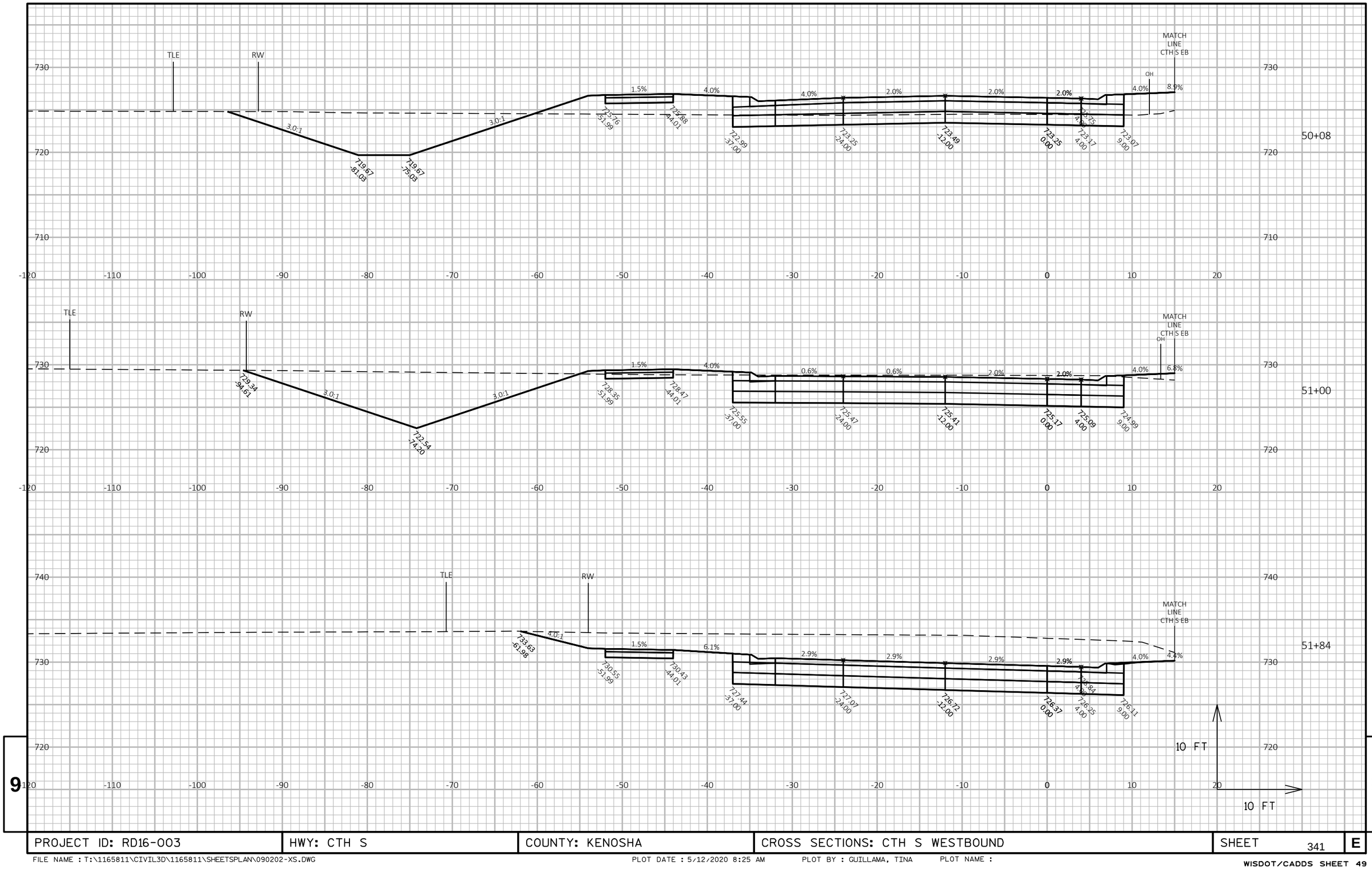

PROJECT ID: RD16-003	HWY: CTH S	COUNTY: KENOSHA	CROSS SECTIONS: CTH S WESTBOUND	SHEET 341	E

FILE NAME : T:\1165811\CIVIL3D\1165811\SHEETSPLAN\090202-XS.DWG PLOT DATE : 5/12/2020 8:25 AM PLOT BY : GUILLAMA, TINA PLOT NAME :

WISDOT/CADDS SHEET 49

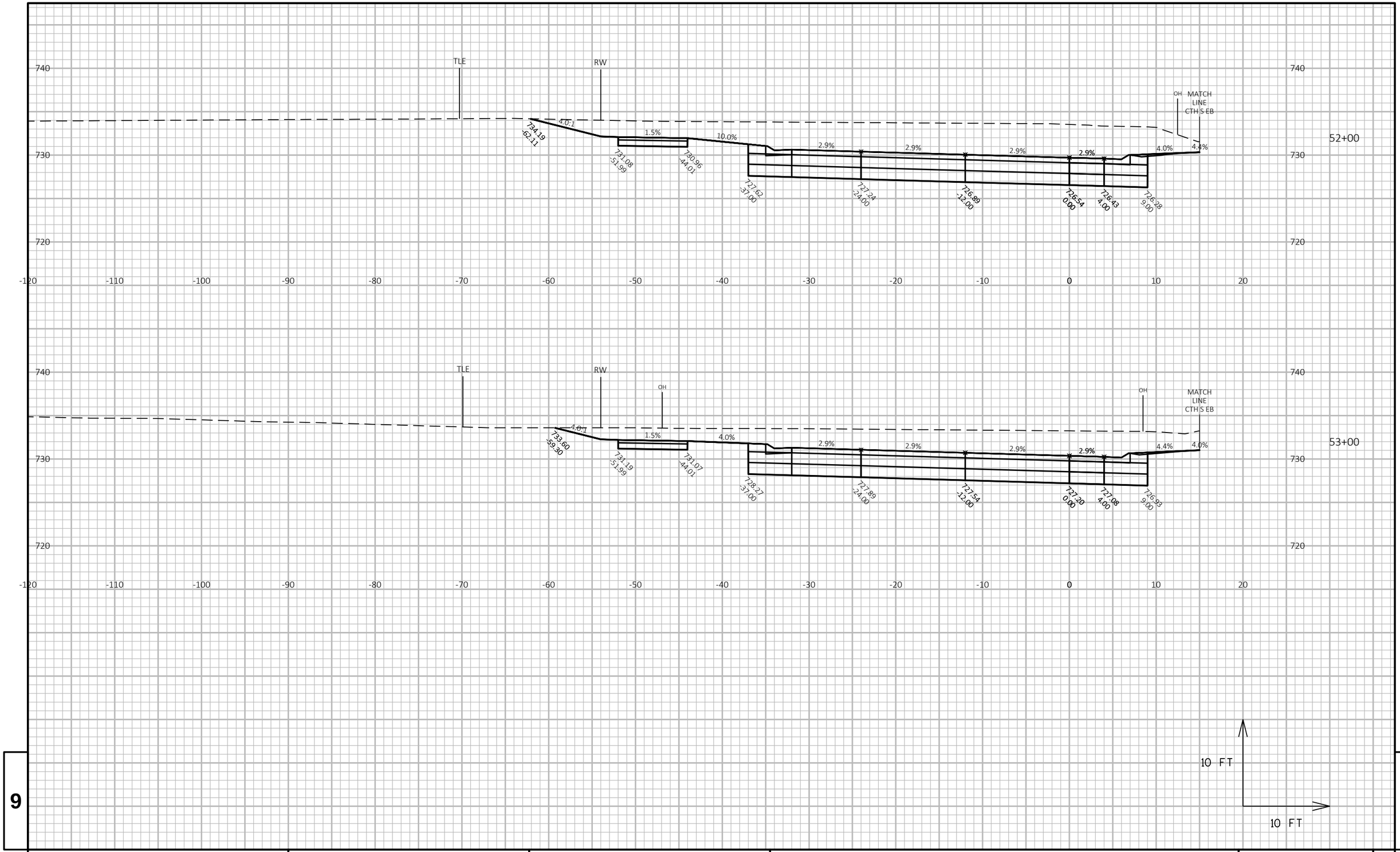

9

PROJECT ID: RD16-003	HWY: CTH S	COUNTY: KENOSHA	CROSS SECTIONS: CTH S WESTBOUND	SHEET 342	E

FILE NAME : T:\1165811\CIVIL3D\1165811\SHEETSPLAN\090202-XS.DWG PLOT DATE : 5/12/2020 8:25 AM PLOT BY : GUILLAMA, TINA PLOT NAME :

WISDOT/CADDS SHEET 49

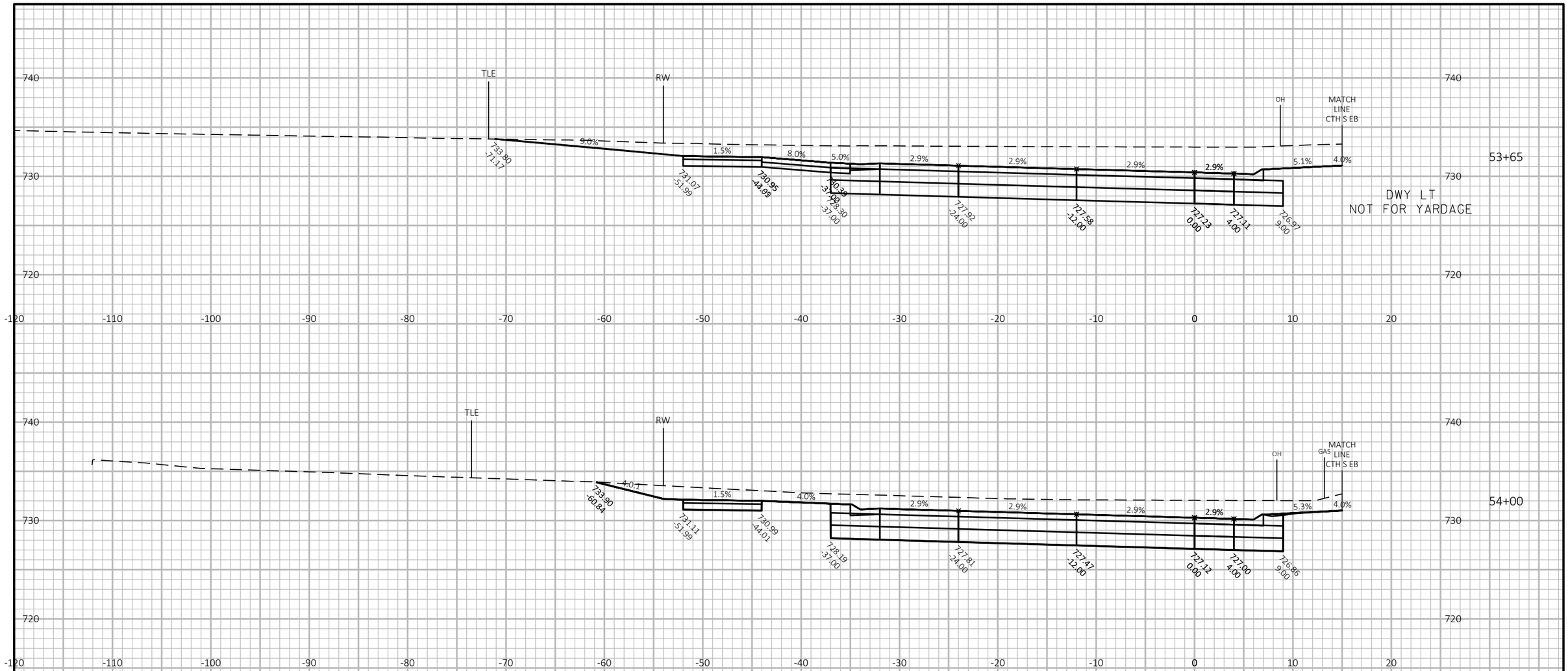

9

9

PROJECT ID: RD16-003	HWY: CTH S	COUNTY: KENOSHA	CROSS SECTIONS: CTH S WESTBOUND	SHEET 343	E

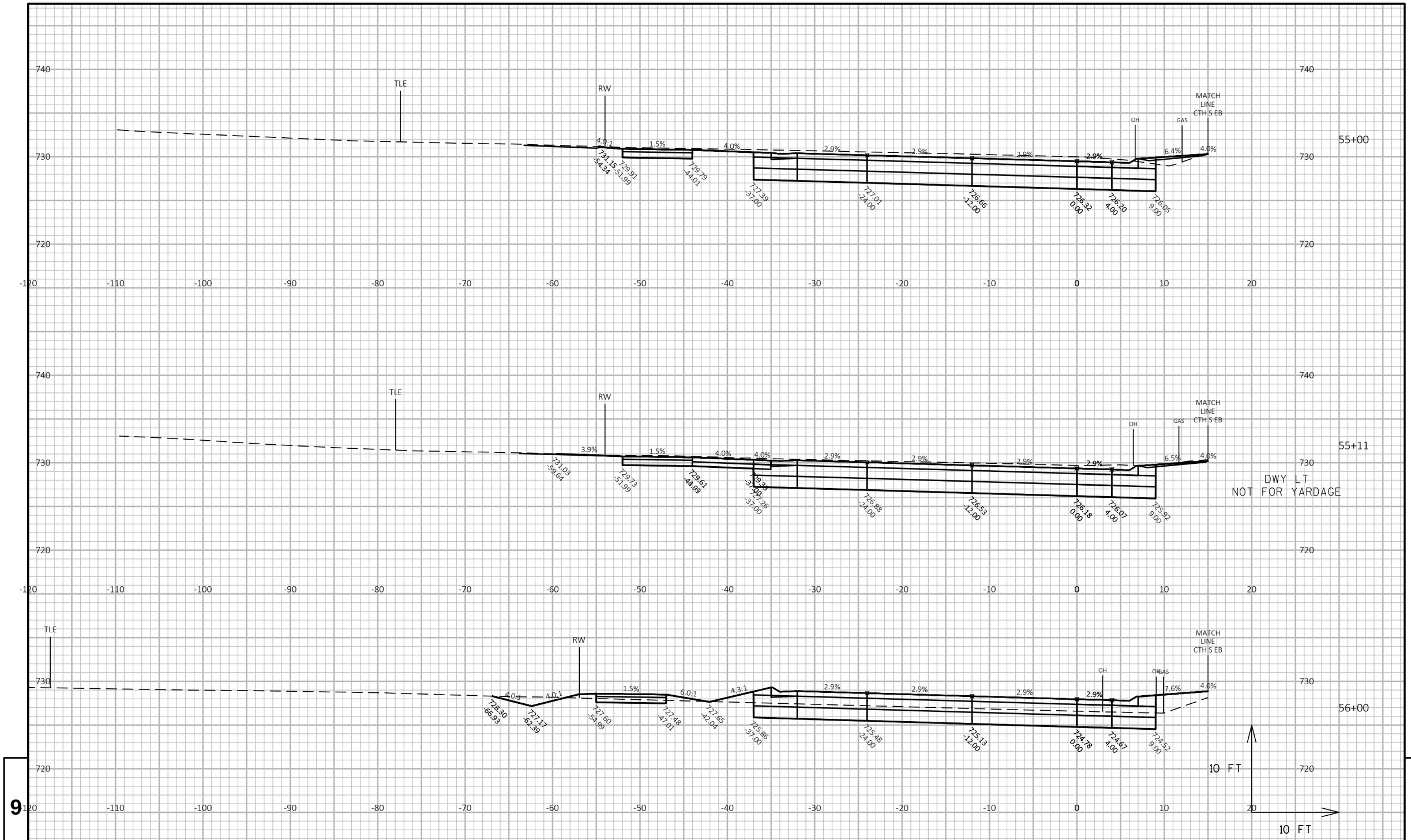

9

9

PROJECT ID: RD16-003	HWY: CTH S	COUNTY: KENOSHA	CROSS SECTIONS: CTH S WESTBOUND	SHEET 344	E

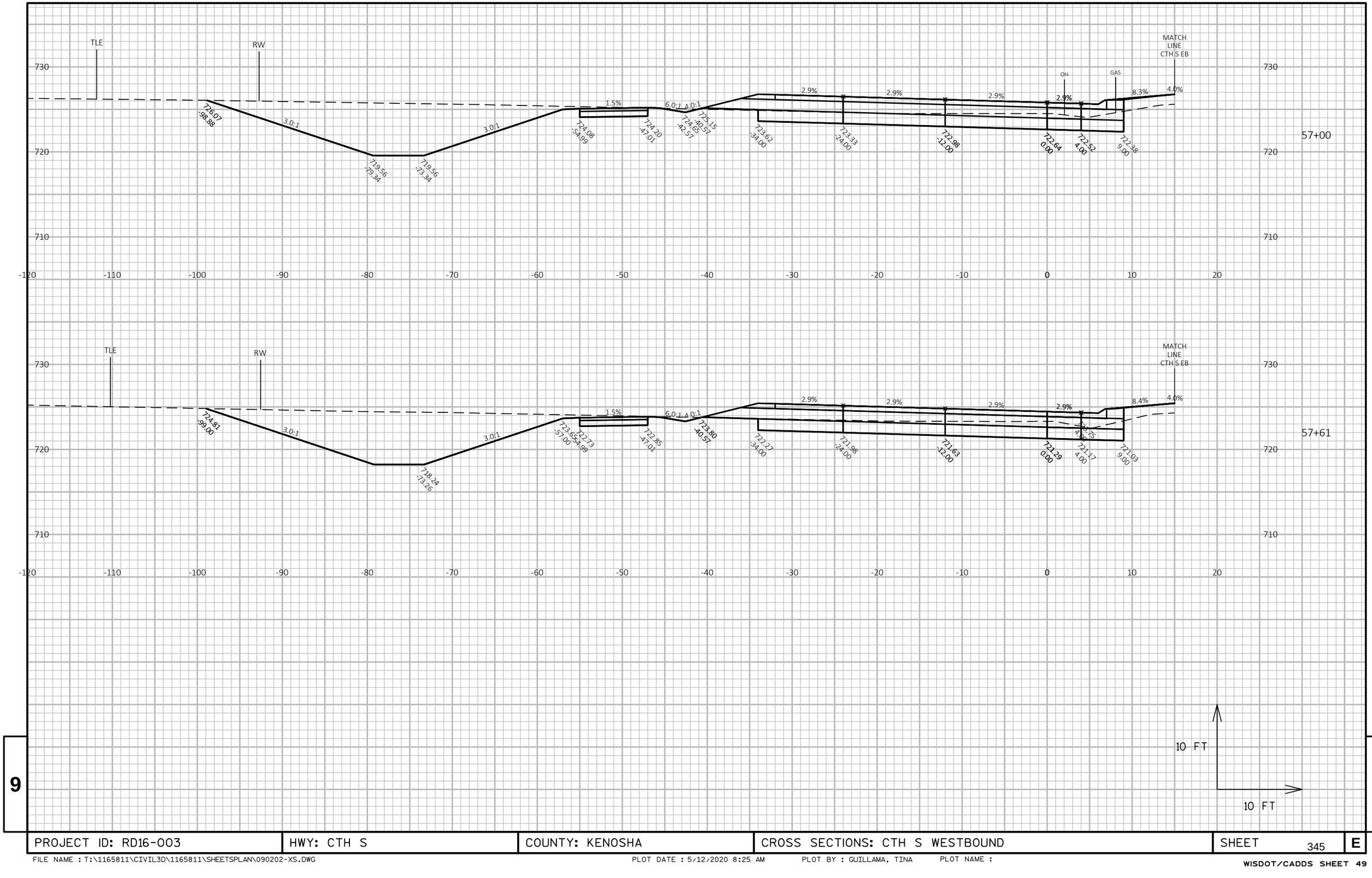

9

9

PROJECT ID: RD16-003	HWY: CTH S	COUNTY: KENOSHA	CROSS SECTIONS: CTH S WESTBOUND	SHEET 345	E

FILE NAME : T:\1165811\CIVIL3D\1165811\SHEETSPLAN\090202-XS.DWG PLOT DATE : 5/12/2020 8:25 AM PLOT BY : GUILLAMA, TINA PLOT NAME :

WISDOT/CADDS SHEET 49

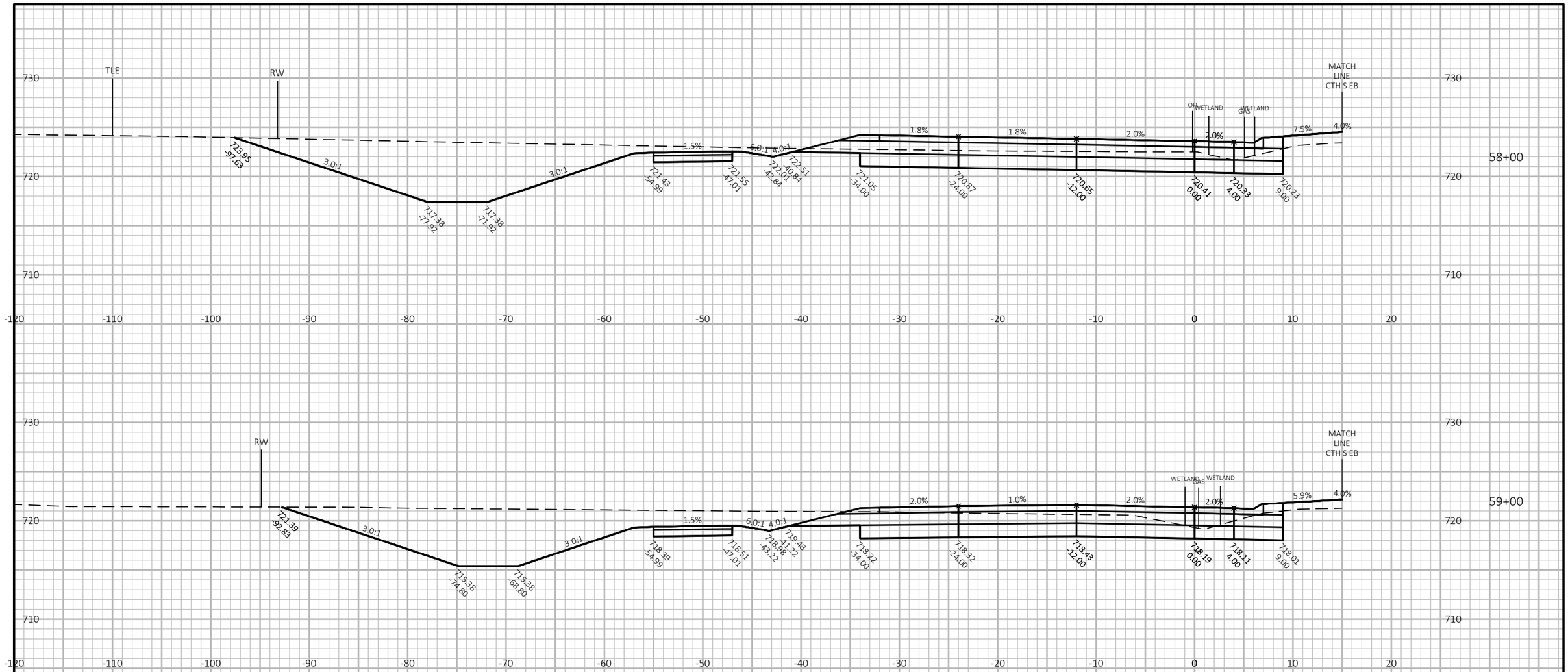

9

9

PROJECT ID: RD16-003	HWY: CTH S	COUNTY: KENOSHA	CROSS SECTIONS: CTH S WESTBOUND	SHEET 346	E

FILE NAME : T:\1165811\CIVIL3D\1165811\SHEETSPLAN\090202-XS.DWG PLOT DATE : 5/12/2020 8:26 AM PLOT BY : GUILLAMA, TINA PLOT NAME :

WISDOT/CADDS SHEET 49

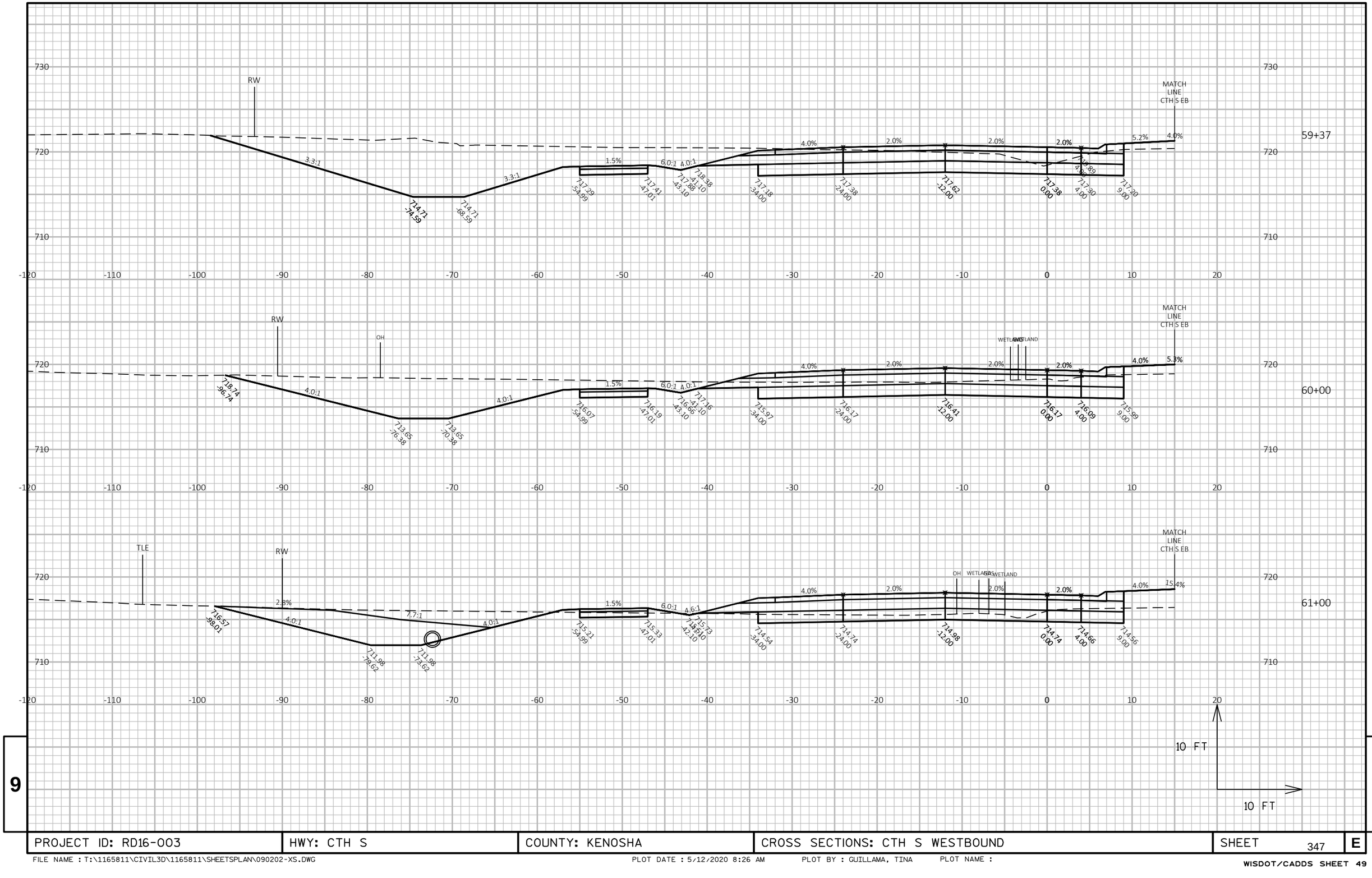

PROJECT ID: RD16-003	HWY: CTH S	COUNTY: KENOSHA	CROSS SECTIONS: CTH S WESTBOUND	SHEET 347	E

FILE NAME : T:\1165811\CIVIL3D\1165811\SHEETSPLAN\090202-XS.DWG PLOT DATE : 5/12/2020 8:26 AM PLOT BY : GUILLAMA, TINA PLOT NAME :

WISDOT/CADDS SHEET 49

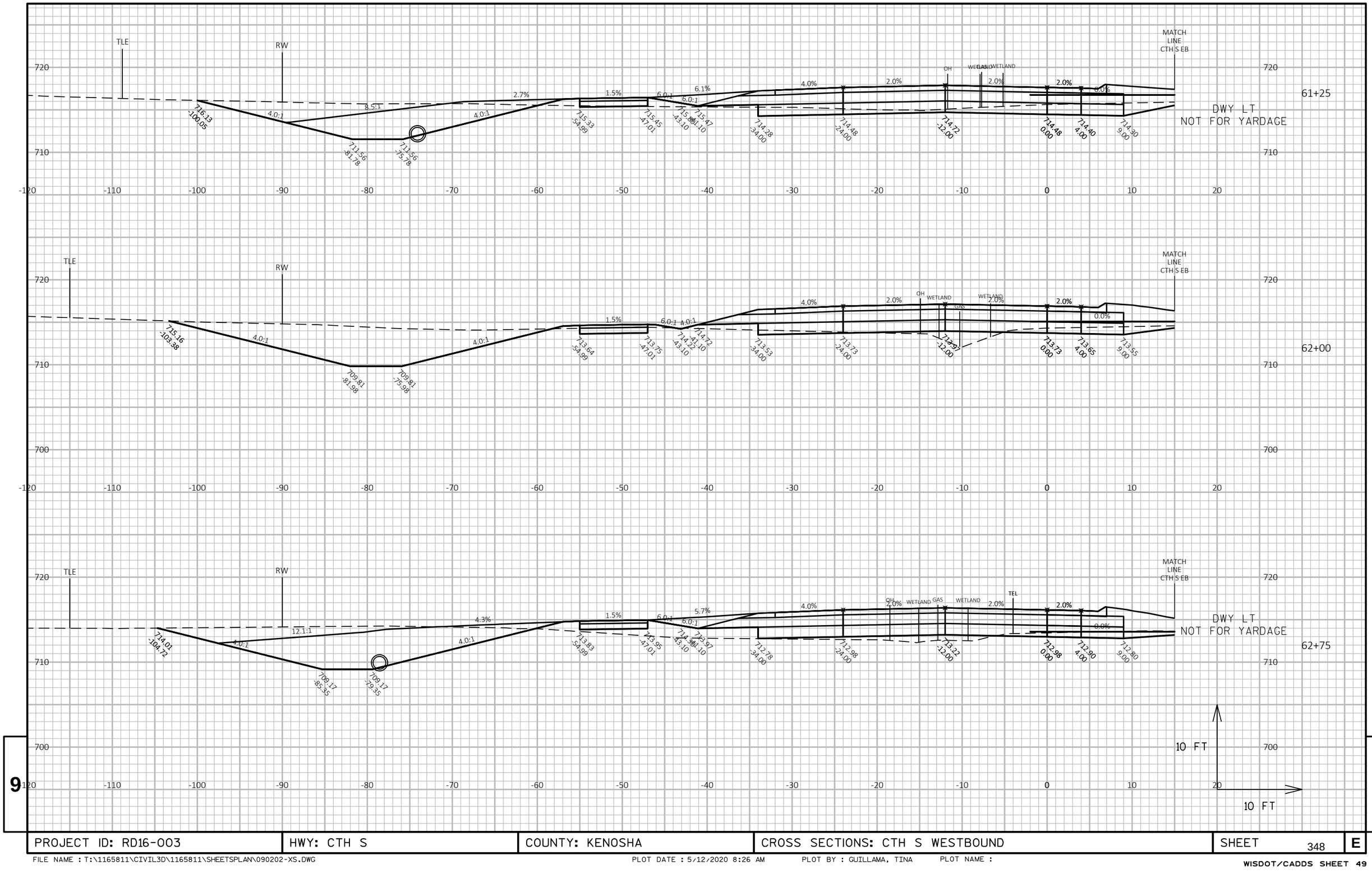

PROJECT ID: RD16-003	HWY: CTH S	COUNTY: KENOSHA	CROSS SECTIONS: CTH S WESTBOUND	SHEET 348	E

FILE NAME : T:\1165811\CIVIL3D\1165811\SHEETSPLAN\090202-XS.DWG PLOT DATE : 5/12/2020 8:26 AM PLOT BY : GUILLAMA, TINA PLOT NAME :

WISDOT/CADDS SHEET 49

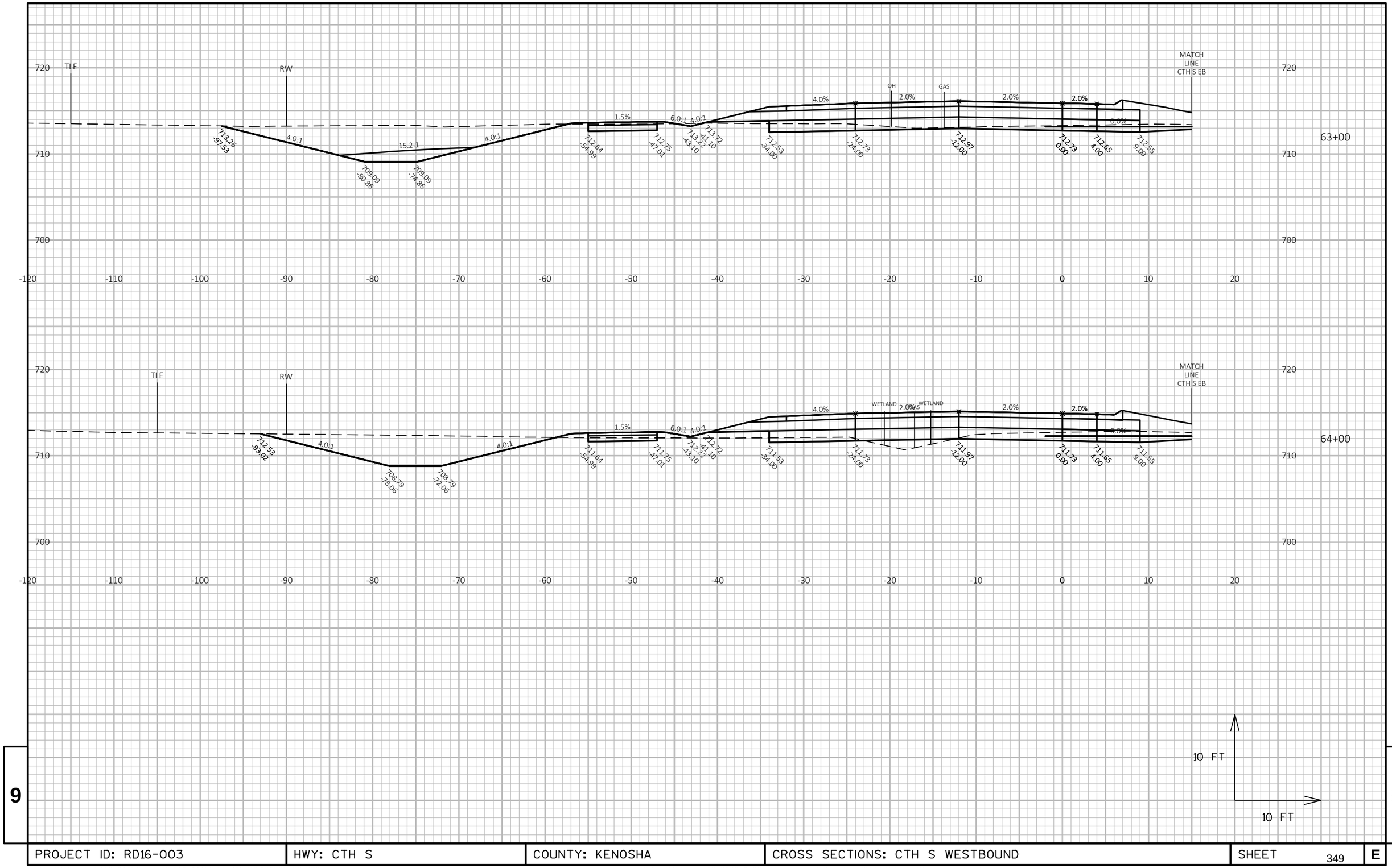

9

9

PROJECT ID: RD16-003	HWY: CTH S	COUNTY: KENOSHA	CROSS SECTIONS: CTH S WESTBOUND	SHEET 349	E

FILE NAME : T:\1165811\CIVIL3D\1165811\SHEETSPLAN\090202-XS.DWG PLOT DATE : 5/12/2020 8:26 AM PLOT BY : GUILLAMA, TINA PLOT NAME :

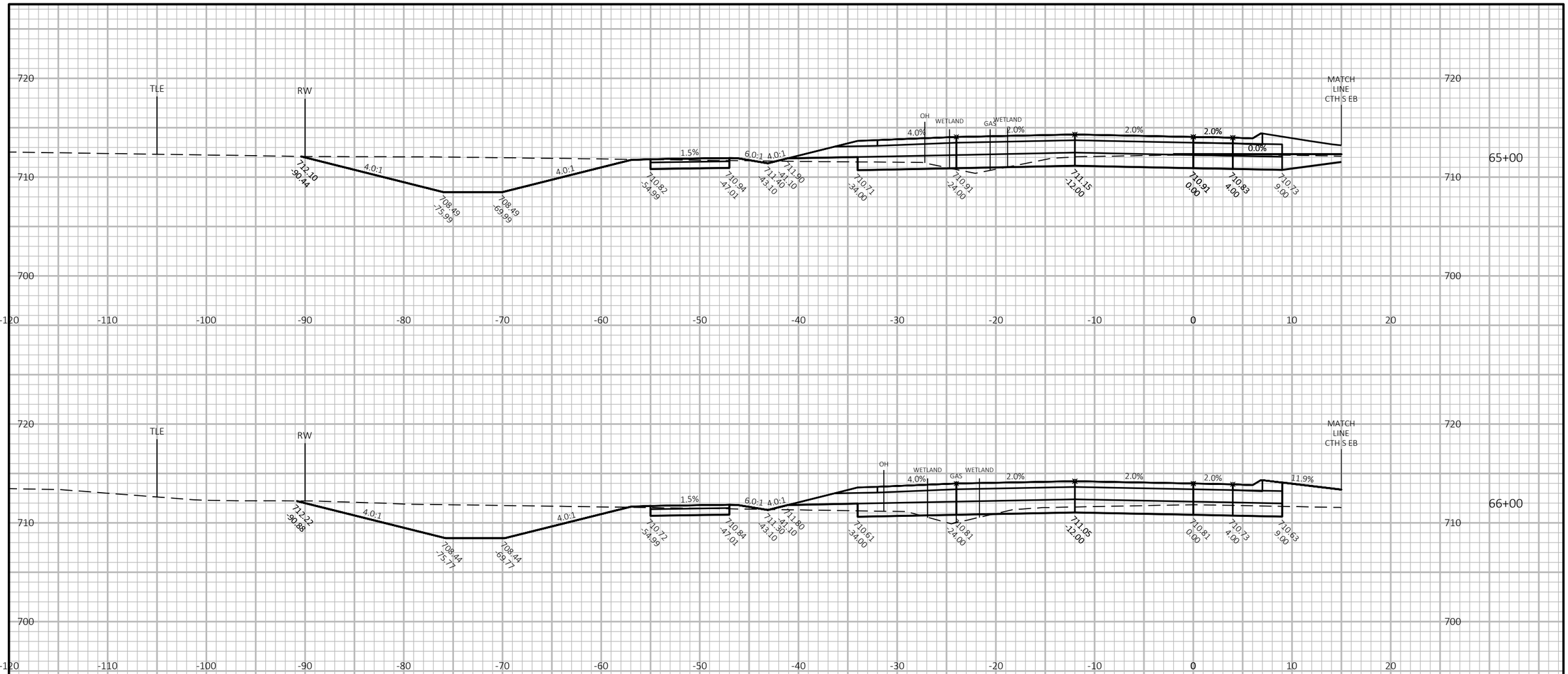

PROJECT ID: RD16-003	HWY: CTH S	COUNTY: KENOSHA	CROSS SECTIONS: CTH S WESTBOUND	SHEET 350	E

FILE NAME : T:\1165811\CIVIL3D\1165811\SHEETSPLAN\090202-XS.DWG PLOT DATE : 5/12/2020 8:26 AM PLOT BY : GUILLAMA, TINA PLOT NAME :

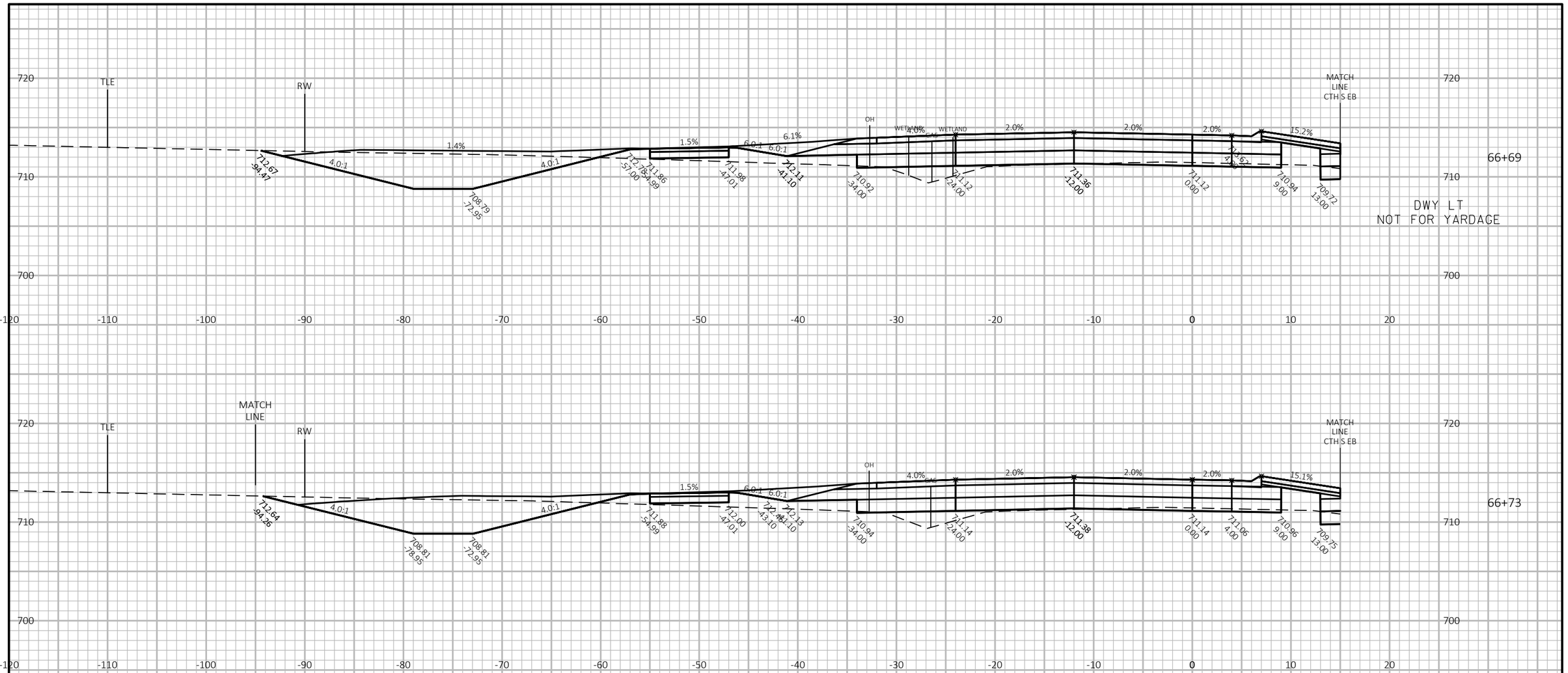

9

9

PROJECT ID: RD16-003	HWY: CTH S	COUNTY: KENOSHA	CROSS SECTIONS: CTH S WESTBOUND	SHEET 351	E

FILE NAME : T:\1165811\CIVIL3D\1165811\SHEETSPLAN\090202-XS.DWG PLOT DATE : 5/12/2020 8:26 AM PLOT BY : GUILLAMA, TINA PLOT NAME :

WISDOT/CADDS SHEET 49

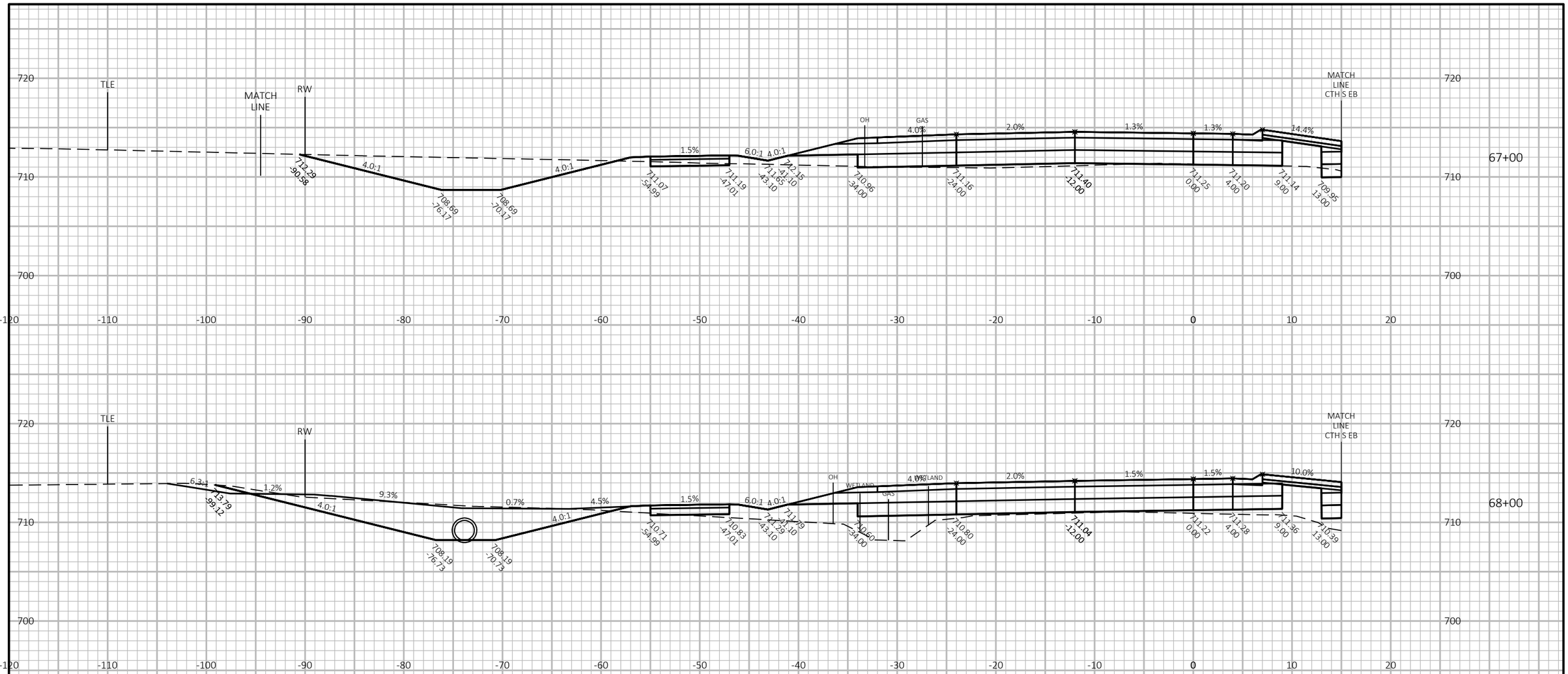

9

9

PROJECT ID: RD16-003	HWY: CTH S	COUNTY: KENOSHA	CROSS SECTIONS: CTH S WESTBOUND	SHEET 352	E

FILE NAME : T:\1165811\CIVIL3D\1165811\SHEETSPLAN\090202-XS.DWG PLOT DATE : 5/12/2020 8:27 AM PLOT BY : GUILLAMA, TINA PLOT NAME :

WISDOT/CADDS SHEET 49

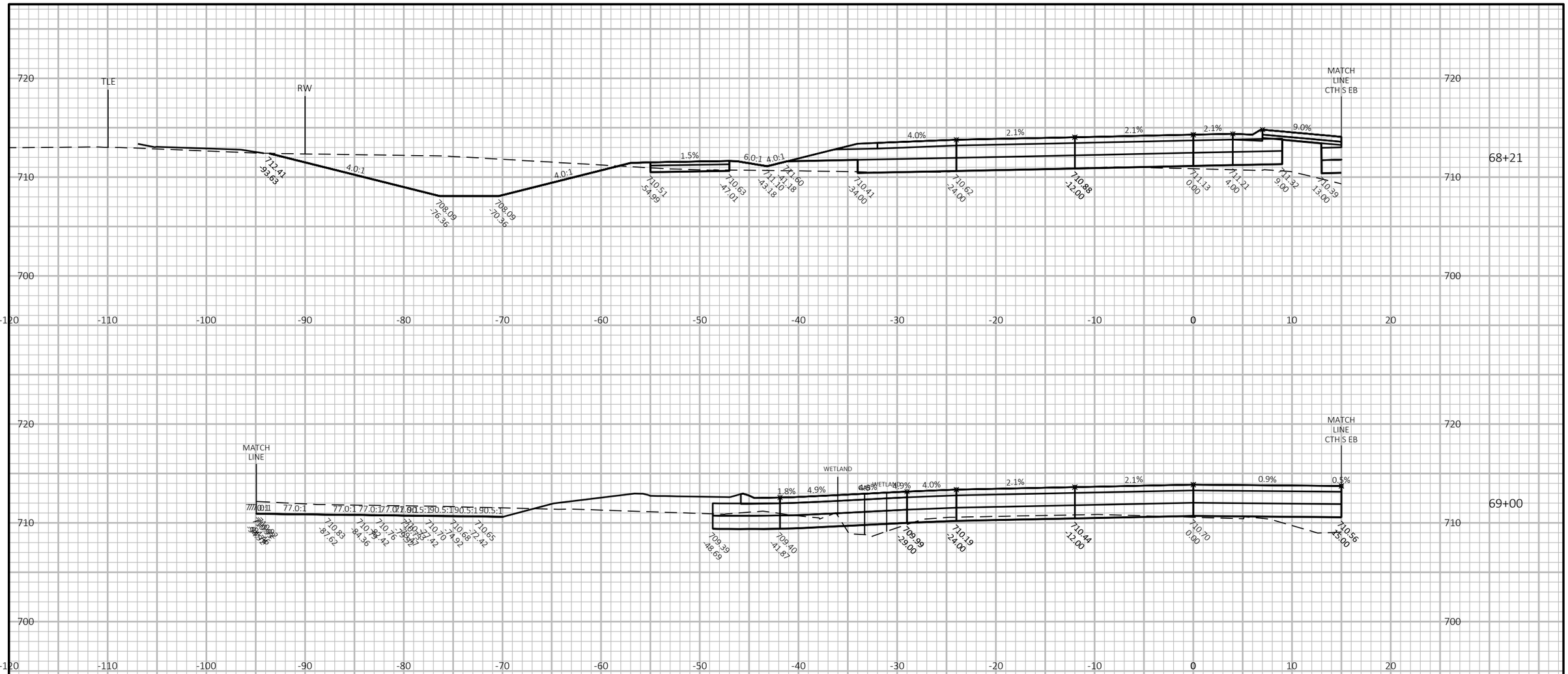

9

9

PROJECT ID: RD16-003	HWY: CTH S	COUNTY: KENOSHA	CROSS SECTIONS: CTH S WESTBOUND	SHEET 353	E

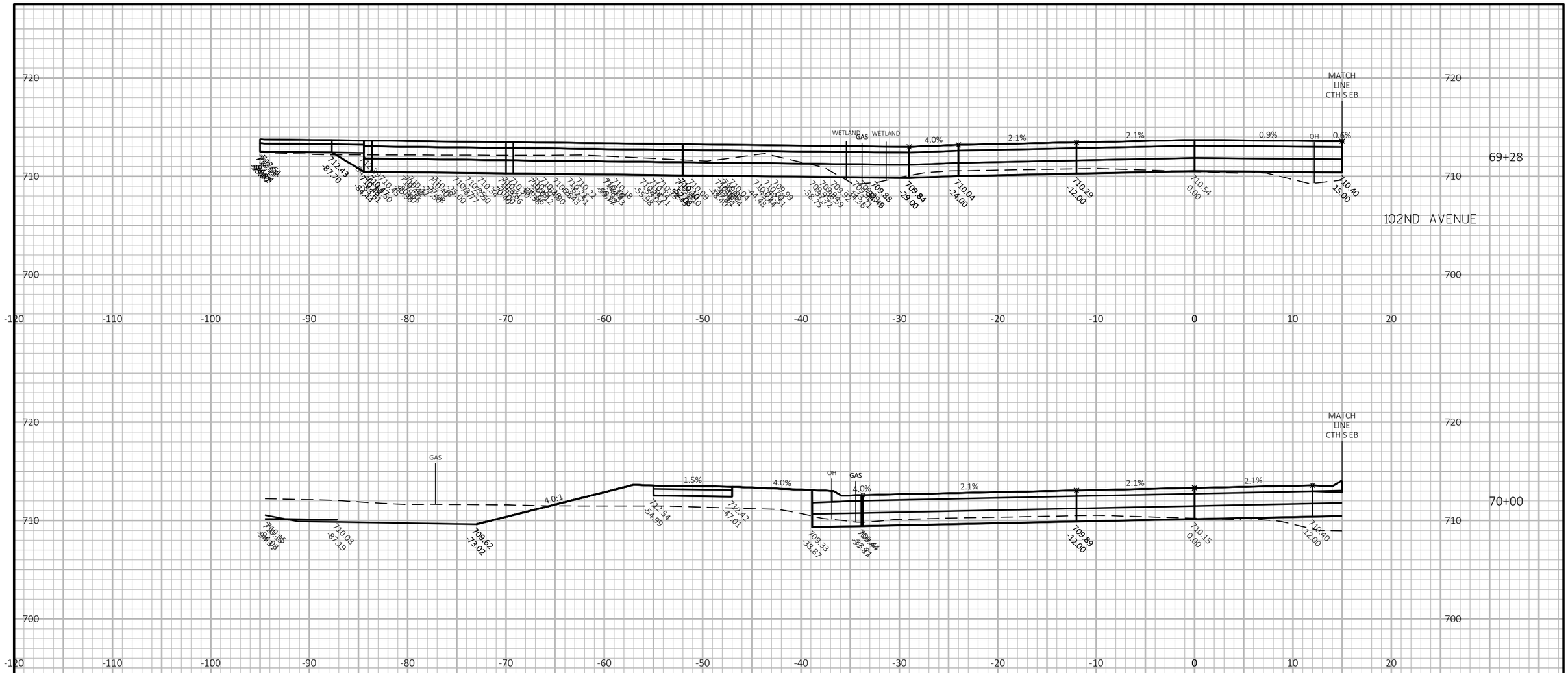

9

9

PROJECT ID: RD16-003	HWY: CTH S	COUNTY: KENOSHA	CROSS SECTIONS: CTH S WESTBOUND	SHEET 354	E

FILE NAME : T:\1165811\CIVIL3D\1165811\SHEETSPLAN\090202-XS.DWG PLOT DATE : 5/12/2020 8:27 AM PLOT BY : GUILLAMA, TINA PLOT NAME :

WISDOT/CADDS SHEET 49

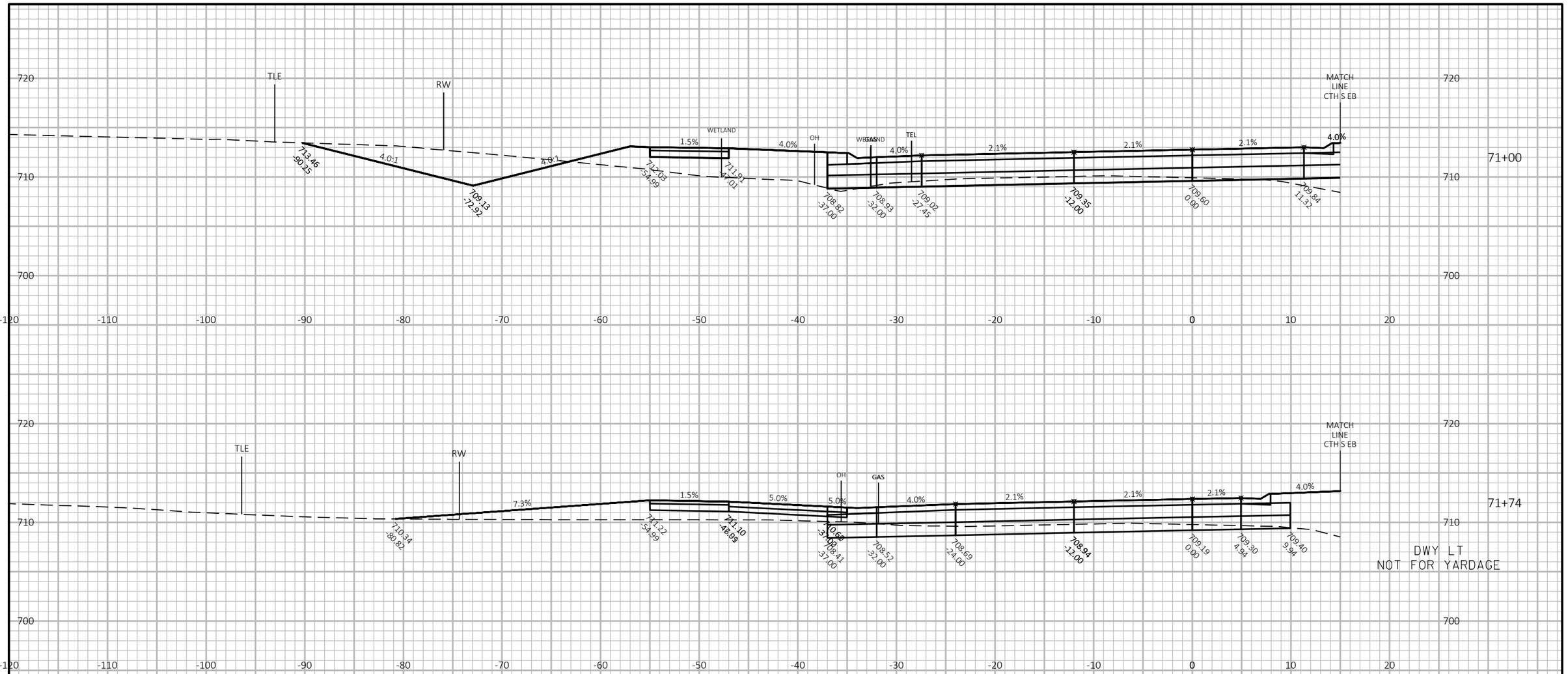

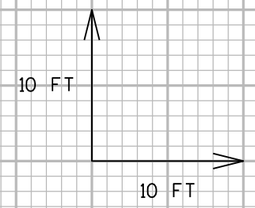

9

9

PROJECT ID: RD16-003	HWY: CTH S	COUNTY: KENOSHA	CROSS SECTIONS: CTH S WESTBOUND	SHEET 355	E

FILE NAME : T:\1165811\CIVIL3D\1165811\SHEETSPLAN\090202-XS.DWG PLOT DATE : 5/12/2020 8:27 AM PLOT BY : GUILLAMA, TINA PLOT NAME :

WISDOT/CADDS SHEET 49

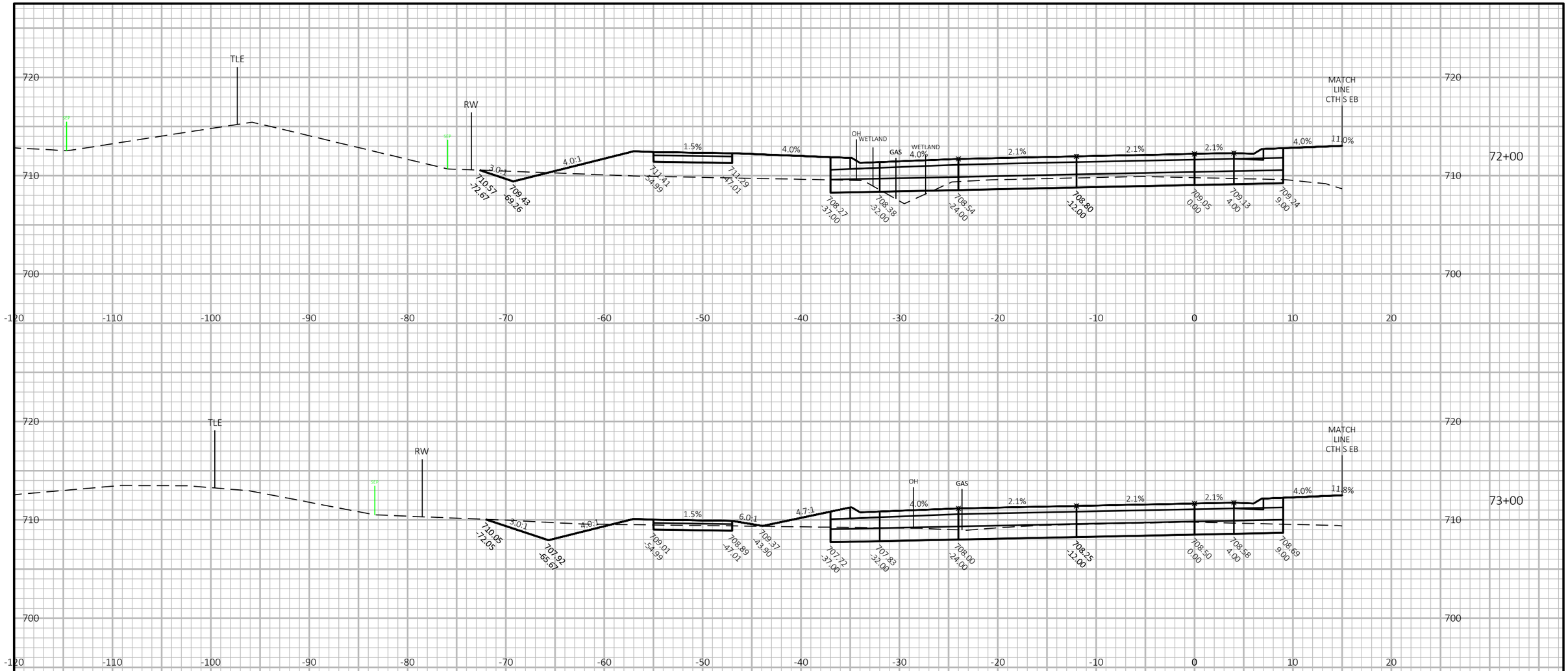

9	PROJECT ID: RD16-003	HWY: CTH S	COUNTY: KENOSHA	CROSS SECTIONS: CTH S WESTBOUND	SHEET 356	E

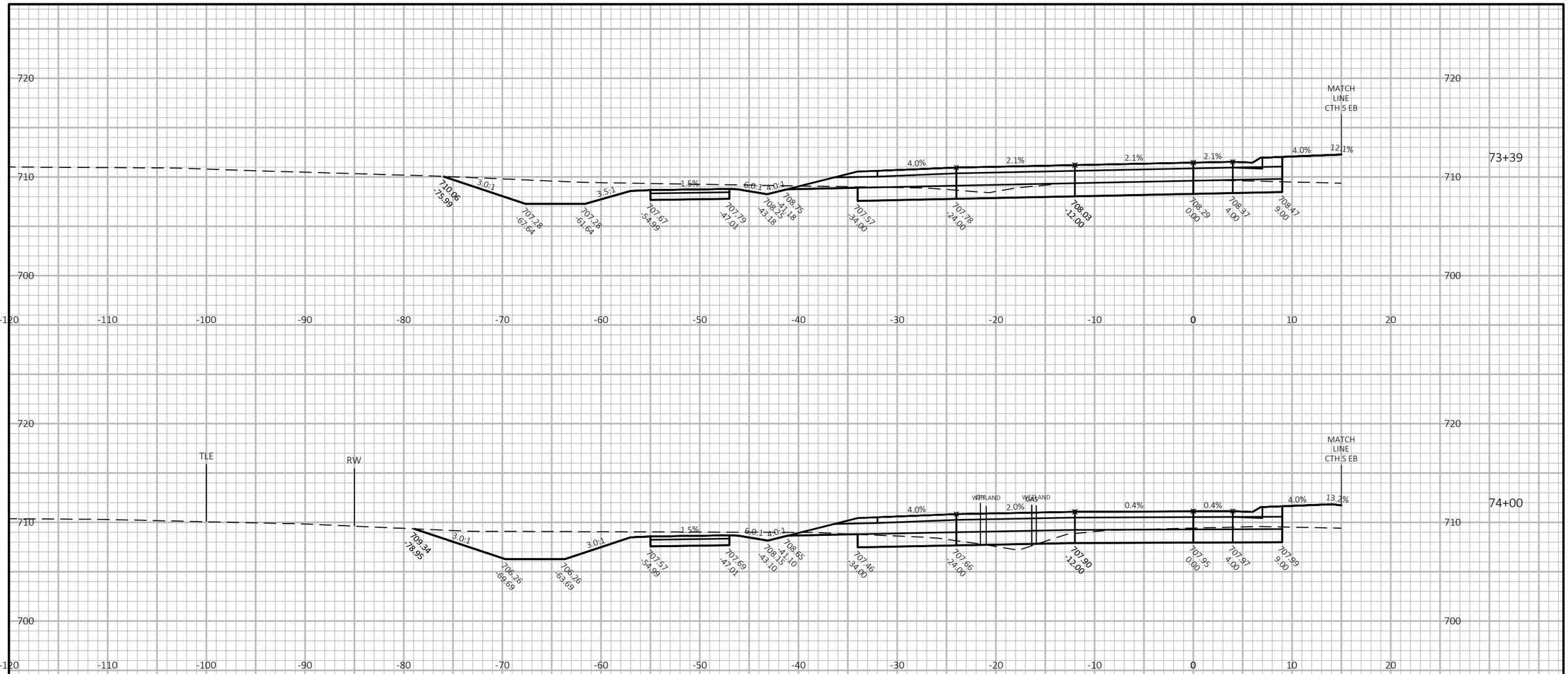

9

9

PROJECT ID: RD16-003	HWY: CTH S	COUNTY: KENOSHA	CROSS SECTIONS: CTH S WESTBOUND	SHEET 357	E

FILE NAME : T:\1165811\CIVIL3D\1165811\SHEETSPLAN\090202-XS.DWG PLOT DATE : 5/12/2020 8:27 AM PLOT BY : GUILLAMA, TINA PLOT NAME :

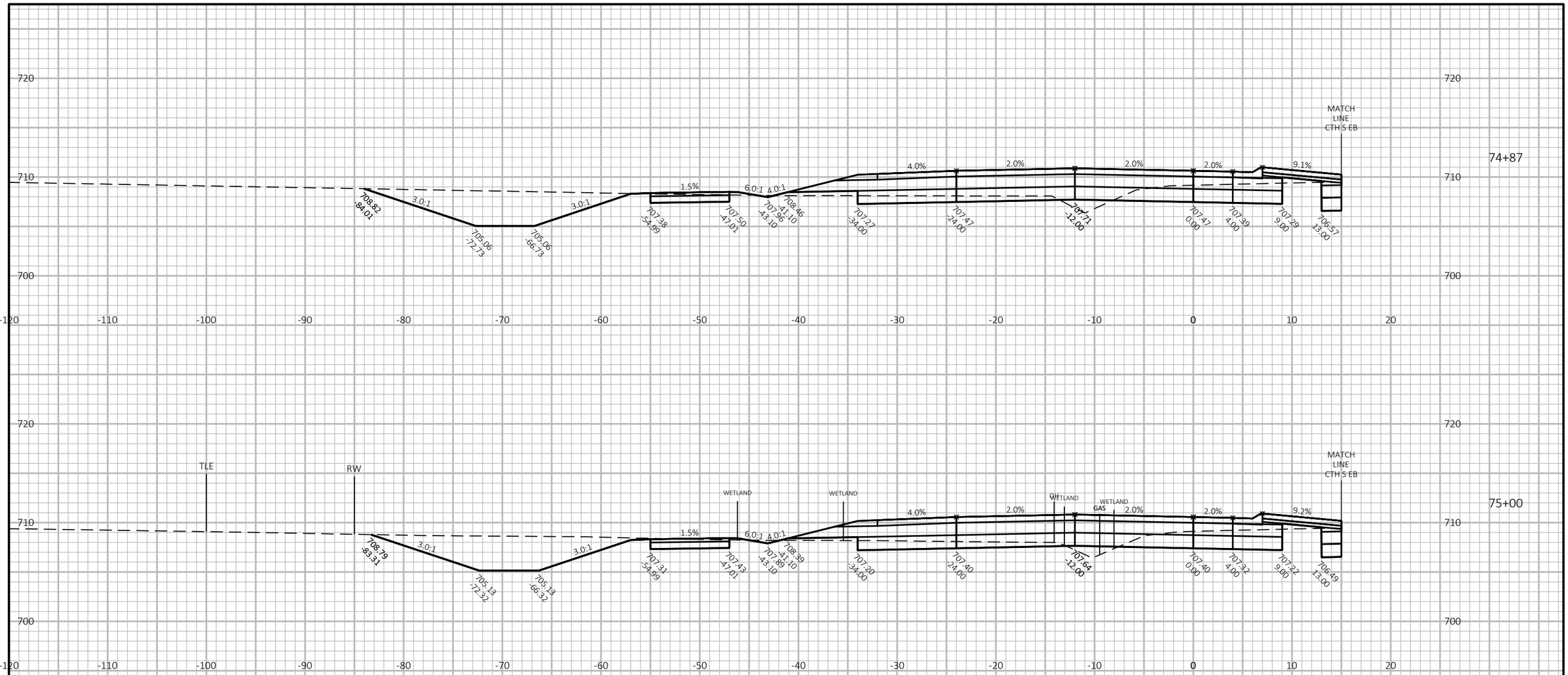

9

9

PROJECT ID: RD16-003	HWY: CTH S	COUNTY: KENOSHA	CROSS SECTIONS: CTH S WESTBOUND	SHEET 358	E

FILE NAME : T:\1165811\CIVIL3D\1165811\SHEETSPLAN\090202-XS.DWG PLOT DATE : 5/12/2020 8:28 AM PLOT BY : GUILLAMA, TINA PLOT NAME :

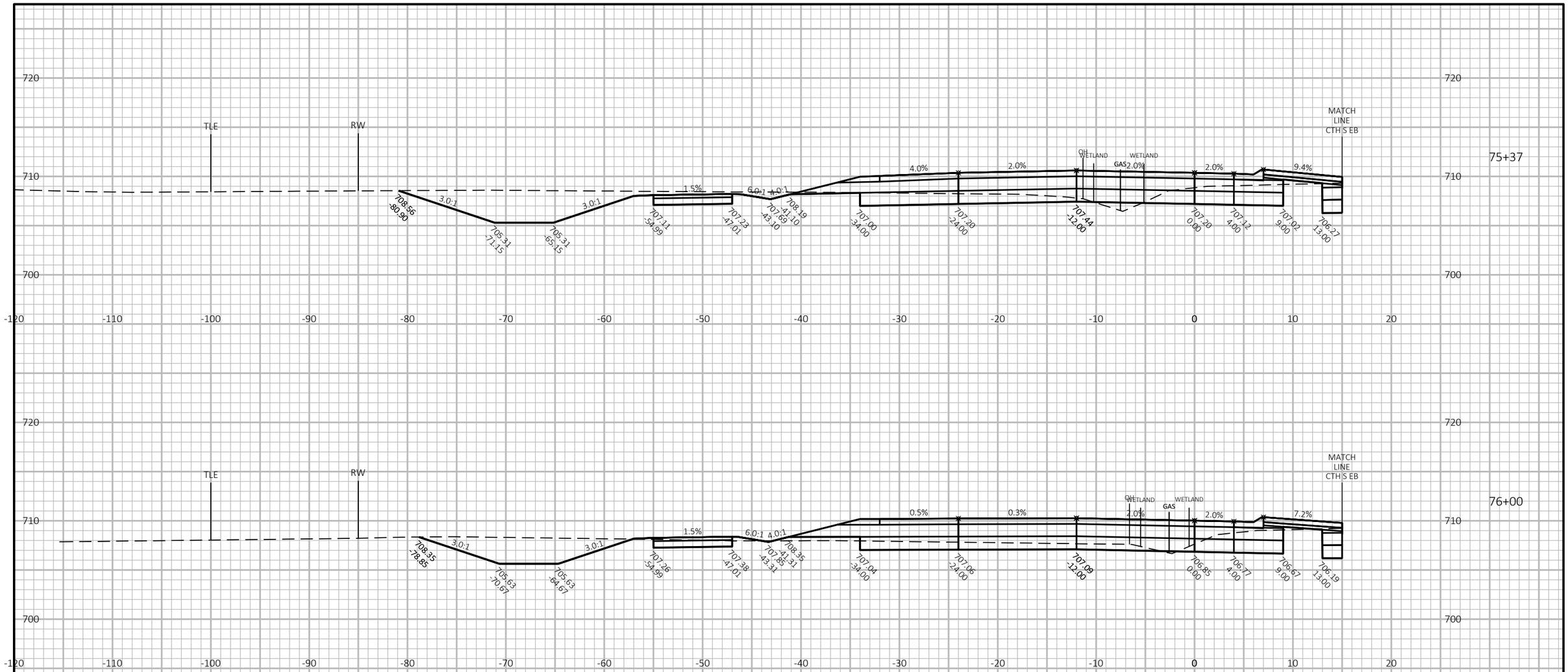

9

9

PROJECT ID: RD16-003	HWY: CTH S	COUNTY: KENOSHA	CROSS SECTIONS: CTH S WESTBOUND	SHEET 359	E

FILE NAME : T:\1165811\CIVIL3D\1165811\SHEETSPLAN\090202-XS.DWG PLOT DATE : 5/12/2020 8:28 AM PLOT BY : GUILLAMA, TINA PLOT NAME :

WISDOT/CADDS SHEET 49

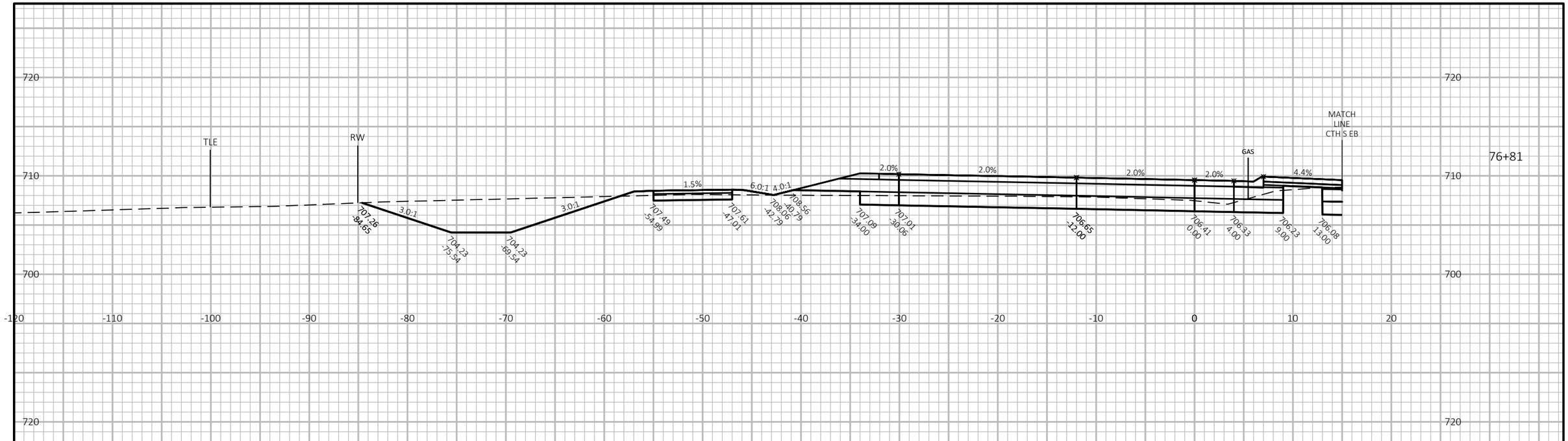

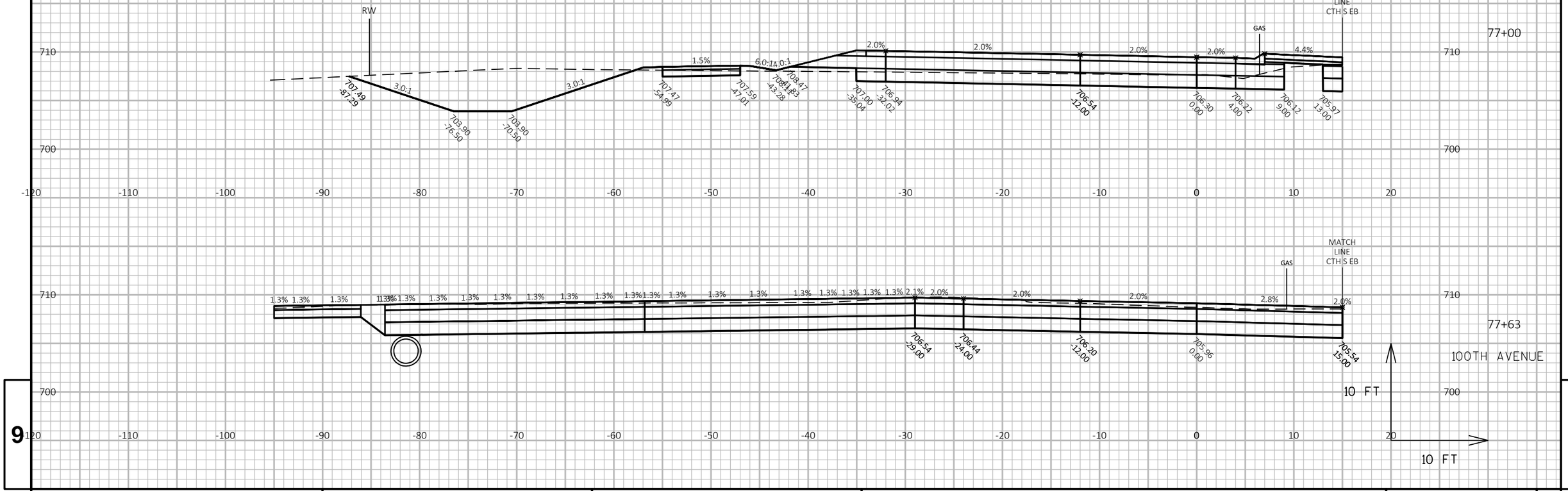

9

9

PROJECT ID: RD16-003	HWY: CTH S	COUNTY: KENOSHA	CROSS SECTIONS: CTH S WESTBOUND	SHEET 360	E

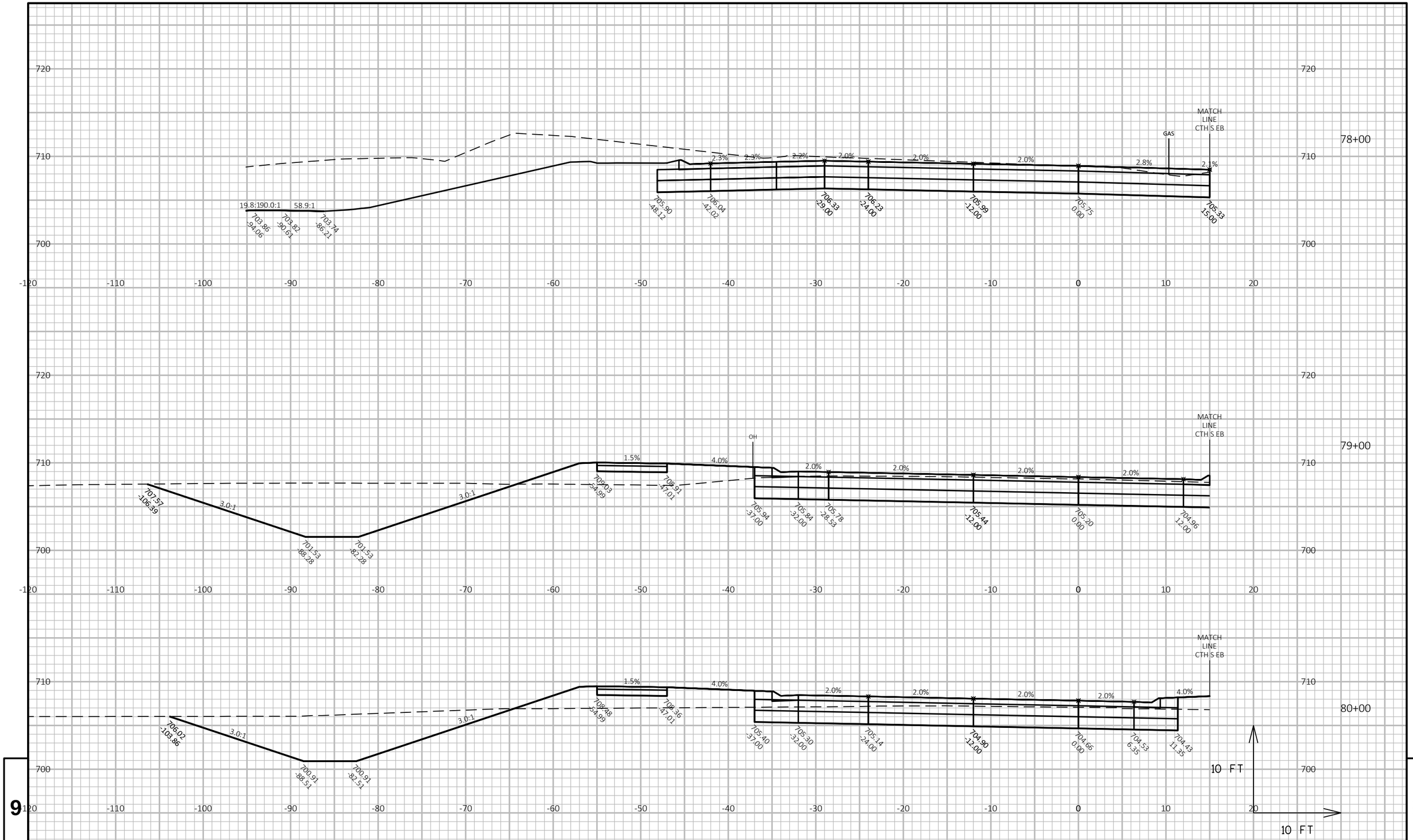

PROJECT ID: RD16-003	HWY: CTH S	COUNTY: KENOSHA	CROSS SECTIONS: CTH S WESTBOUND	SHEET 361	E

FILE NAME : T:\1165811\CIVIL3D\1165811\SHEETSPLAN\090202-XS.DWG PLOT DATE : 5/12/2020 8:28 AM PLOT BY : GUILLAMA, TINA PLOT NAME :

WISDOT/CADDS SHEET 49

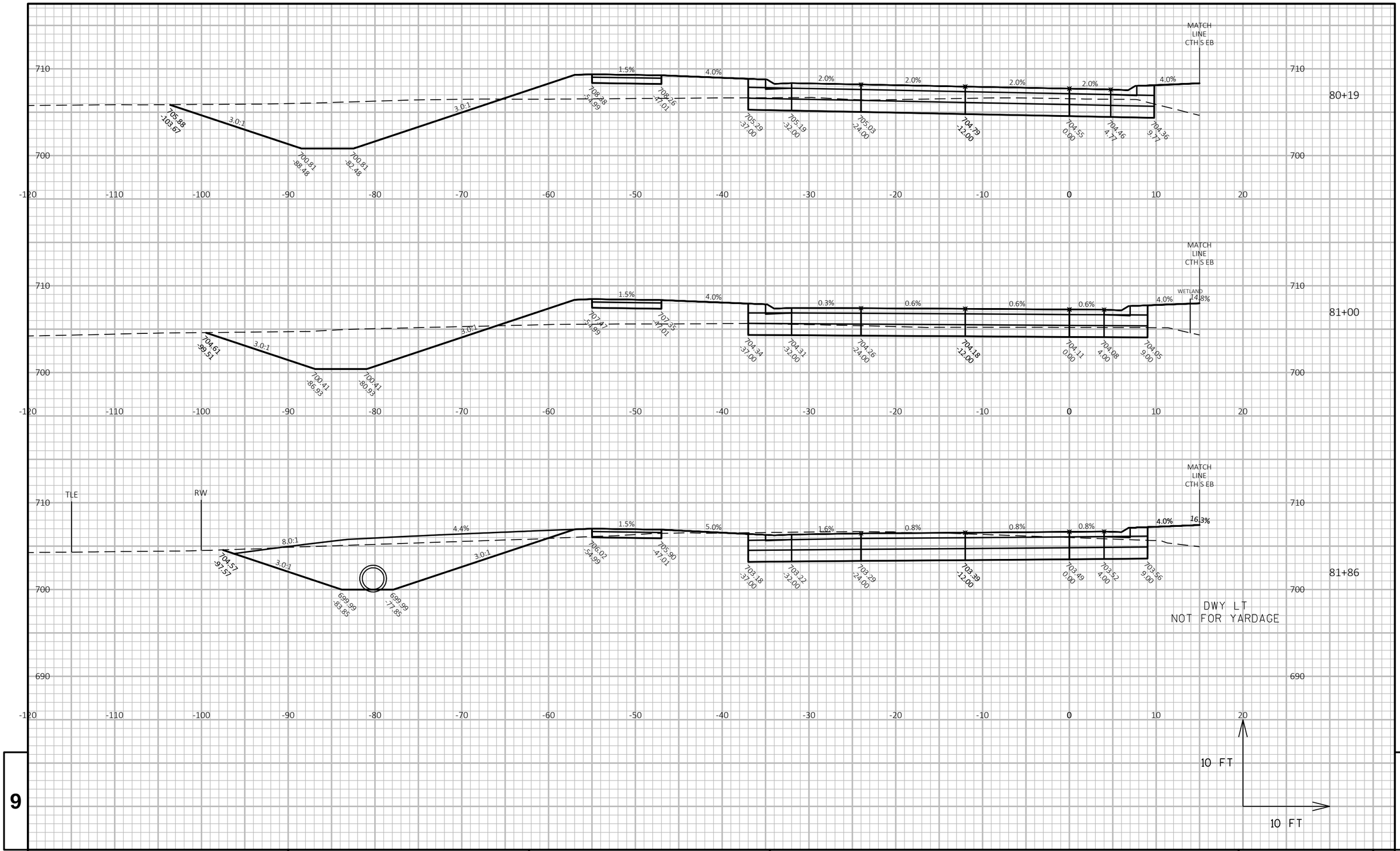

9

9

PROJECT ID: RD16-003	HWY: CTH S	COUNTY: KENOSHA	CROSS SECTIONS: CTH S WESTBOUND	SHEET 362	E

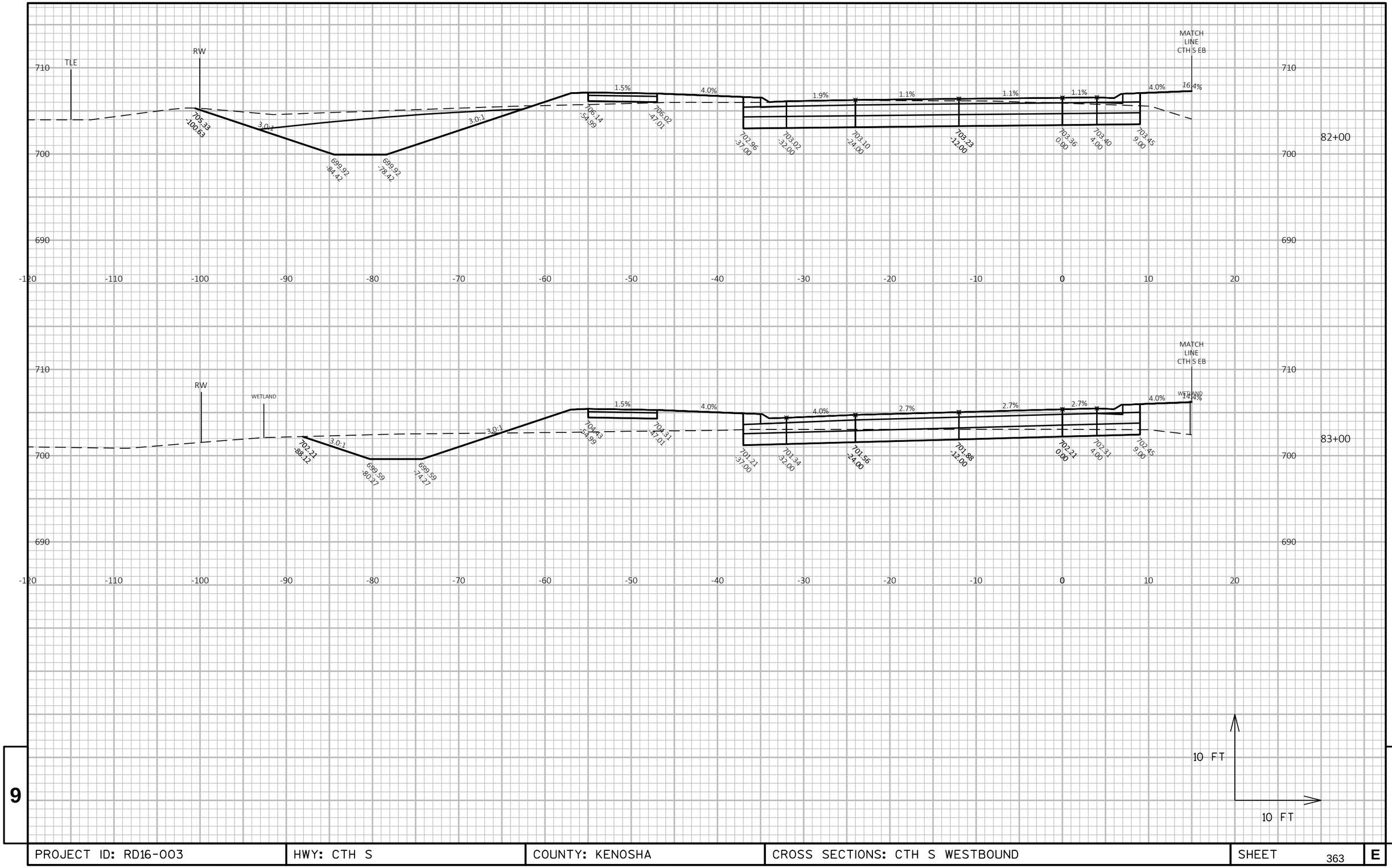

PROJECT ID: RD16-003	HWY: CTH S	COUNTY: KENOSHA	CROSS SECTIONS: CTH S WESTBOUND	SHEET 363	E

FILE NAME : T:\1165811\CIVIL3D\1165811\SHEETSPLAN\090202-XS.DWG PLOT DATE : 5/12/2020 8:28 AM PLOT BY : GUILLAMA, TINA PLOT NAME :

WISDOT/CADDS SHEET 49

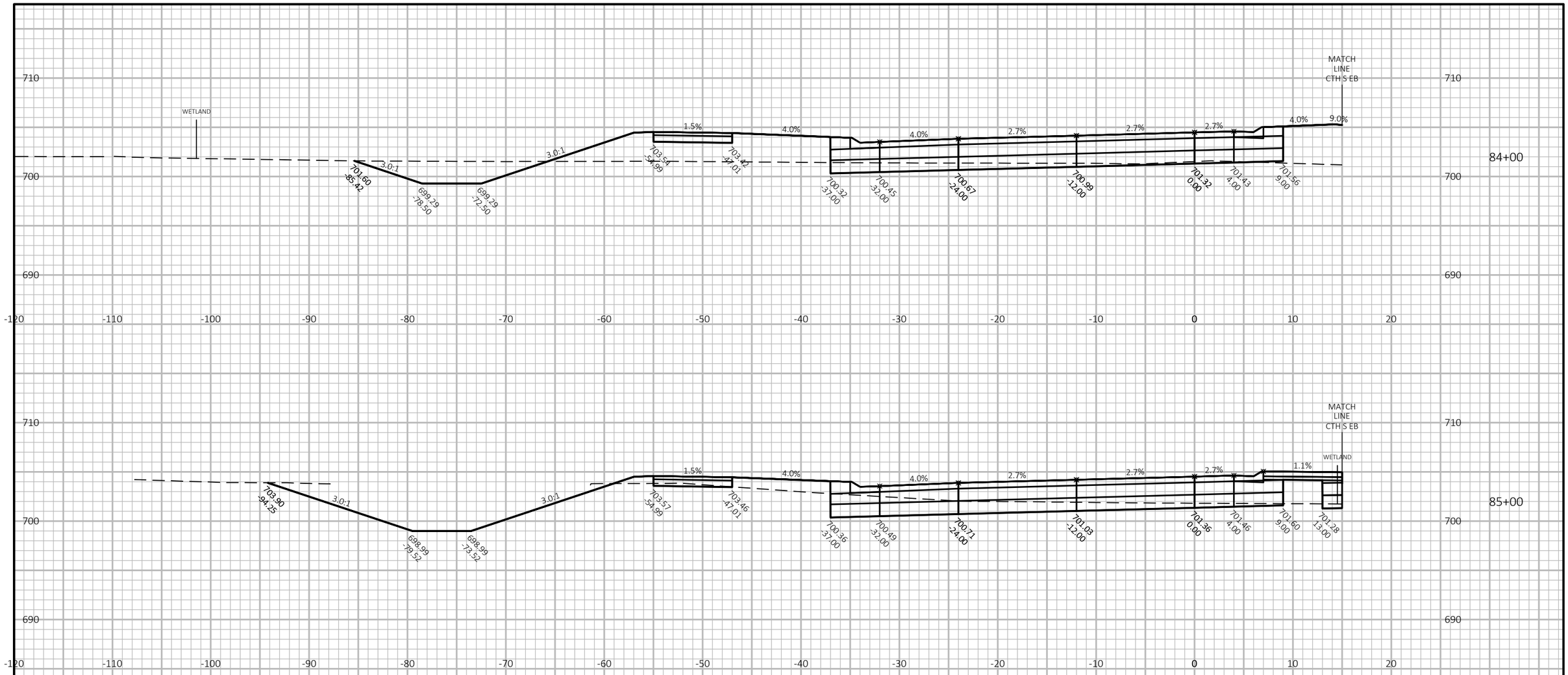

9	PROJECT ID: RD16-003	HWY: CTH S	COUNTY: KENOSHA	CROSS SECTIONS: CTH S WESTBOUND	SHEET 364 E

FILE NAME : T:\1165811\CIVIL3D\1165811\SHEETSPLAN\090202-XS.DWG PLOT DATE : 5/12/2020 8:29 AM PLOT BY : GUILLAMA, TINA PLOT NAME :

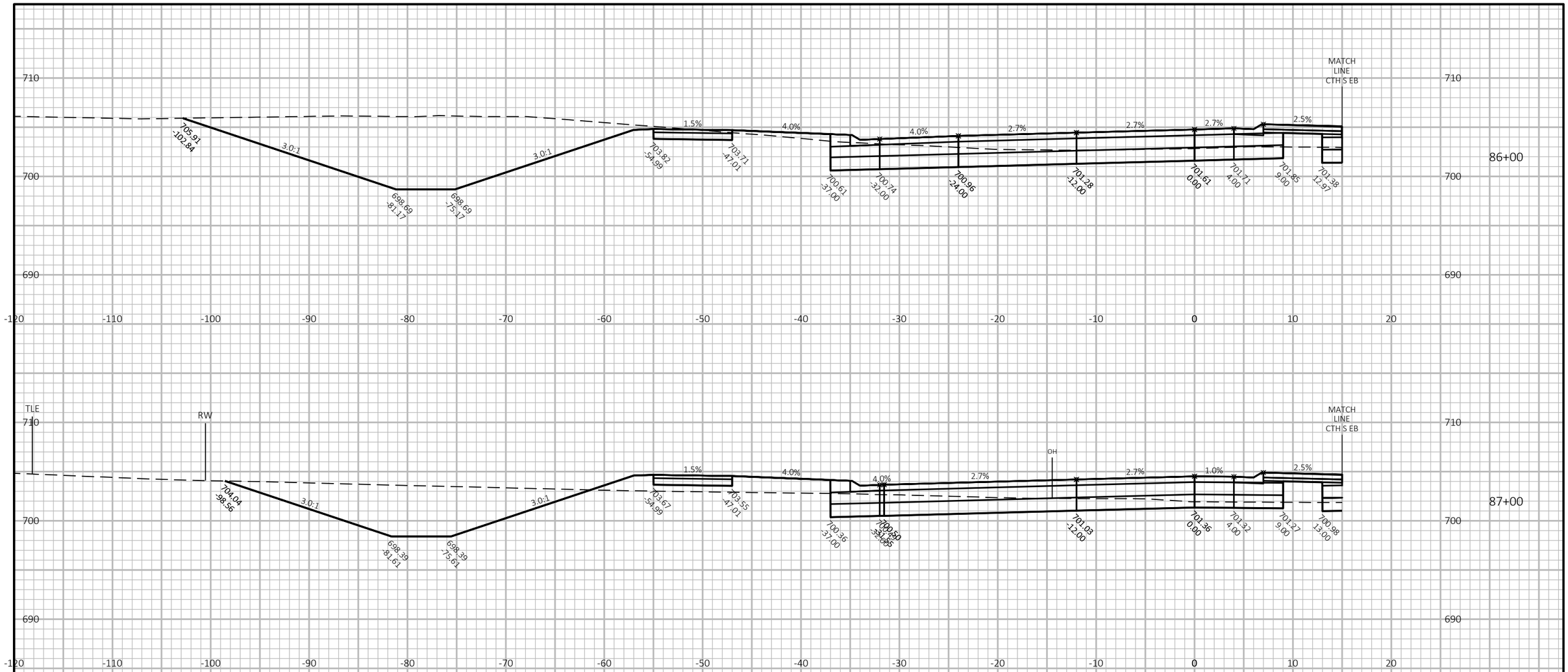

9

PROJECT ID: RD16-003	HWY: CTH S	COUNTY: KENOSHA	CROSS SECTIONS: CTH S WESTBOUND	SHEET 365	E

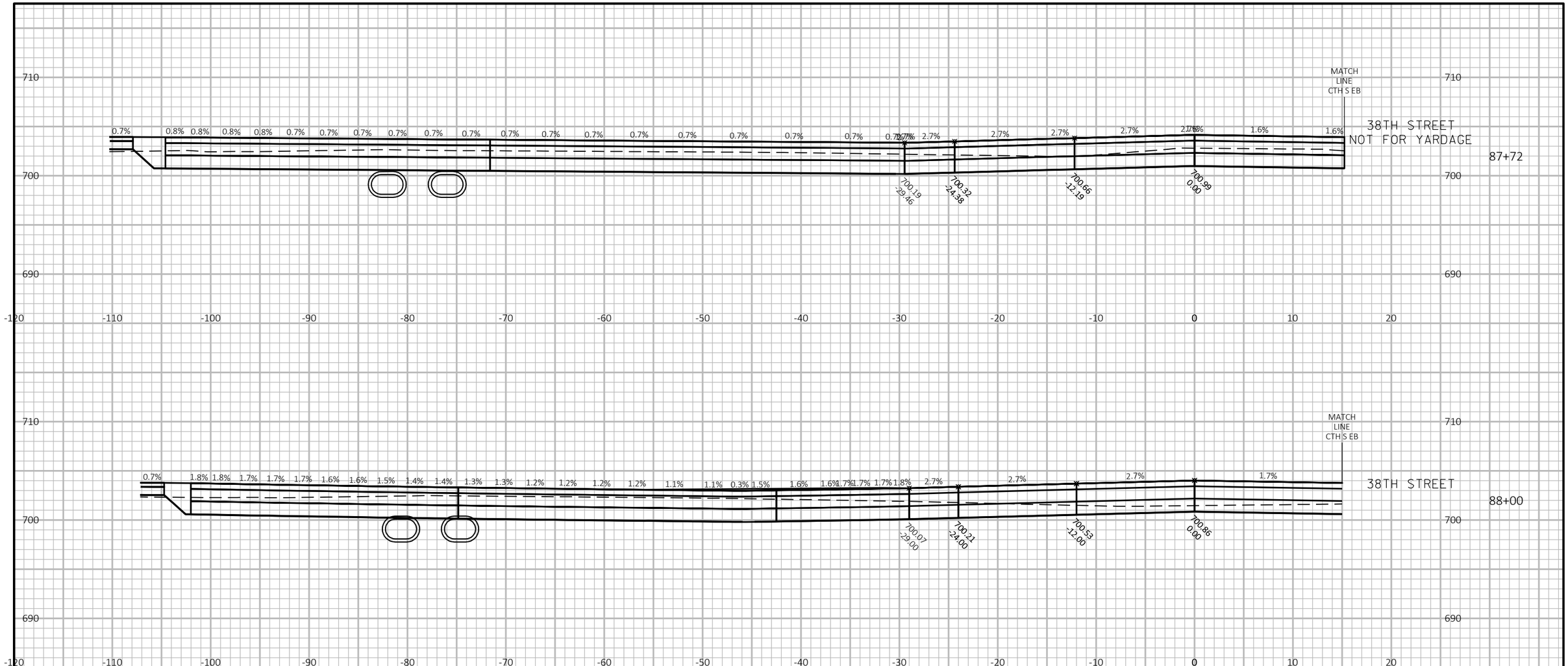

PROJECT ID: RD16-003	HWY: CTH S	COUNTY: KENOSHA	CROSS SECTIONS: CTH S WESTBOUND	SHEET 366	E

FILE NAME : T:\1165811\CIVIL3D\1165811\SHEETSPLAN\090202-XS.DWG PLOT DATE : 5/12/2020 8:29 AM PLOT BY : GUILLAMA, TINA PLOT NAME :

WISDOT/CADDS SHEET 49

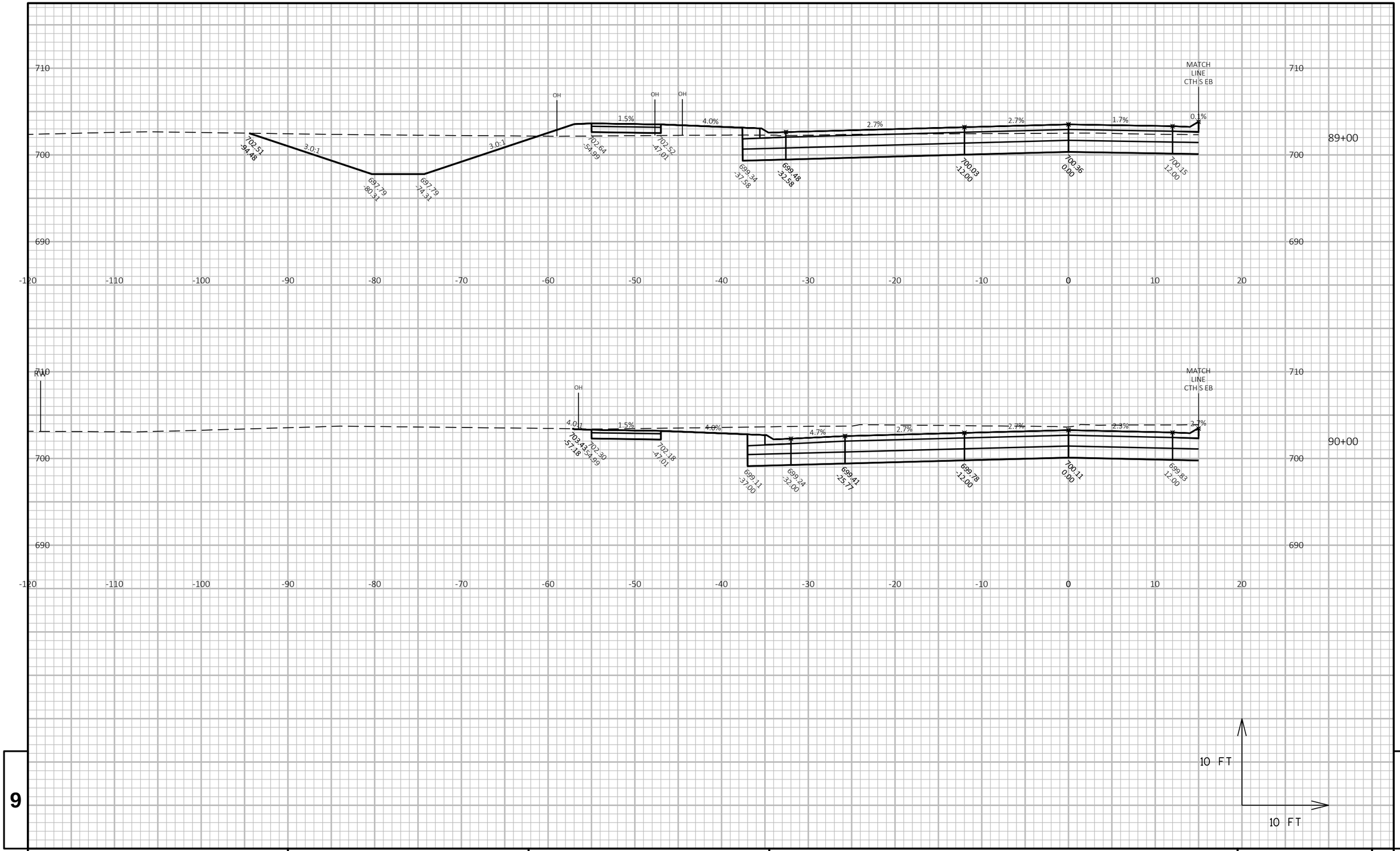

9

9

PROJECT ID: RD16-003	HWY: CTH S	COUNTY: KENOSHA	CROSS SECTIONS: CTH S WESTBOUND	SHEET 367	E

FILE NAME : T:\1165811\CIVIL3D\1165811\SHEETSPLAN\090202-XS.DWG PLOT DATE : 5/12/2020 8:29 AM PLOT BY : GUILLAMA, TINA PLOT NAME :

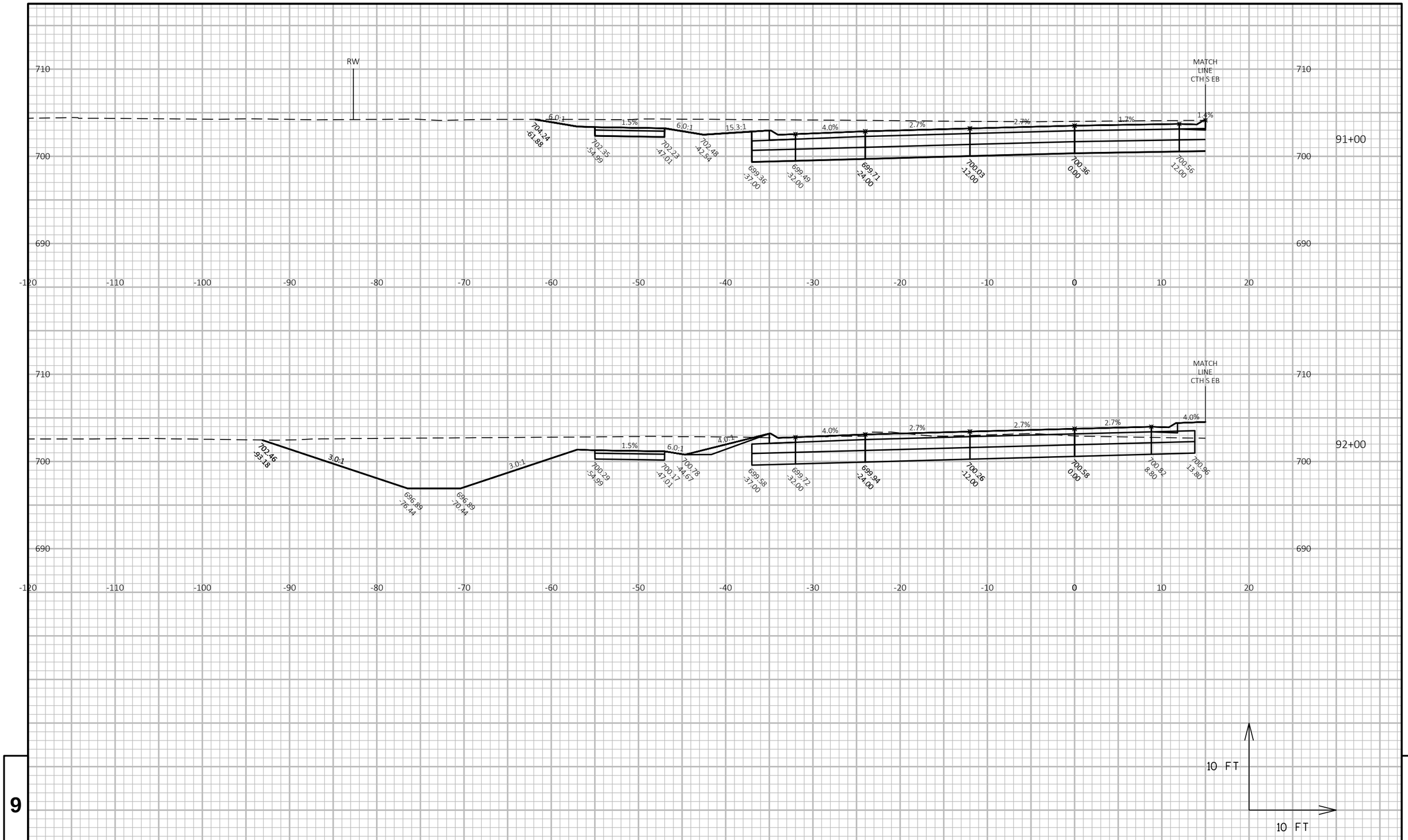

9

9

PROJECT ID: RD16-003	HWY: CTH S	COUNTY: KENOSHA	CROSS SECTIONS: CTH S WESTBOUND	SHEET 368	E

FILE NAME : T:\1165811\CIVIL3D\1165811\SHEETSPLAN\090202-XS.DWG PLOT DATE : 5/12/2020 8:29 AM PLOT BY : GUILLAMA, TINA PLOT NAME :

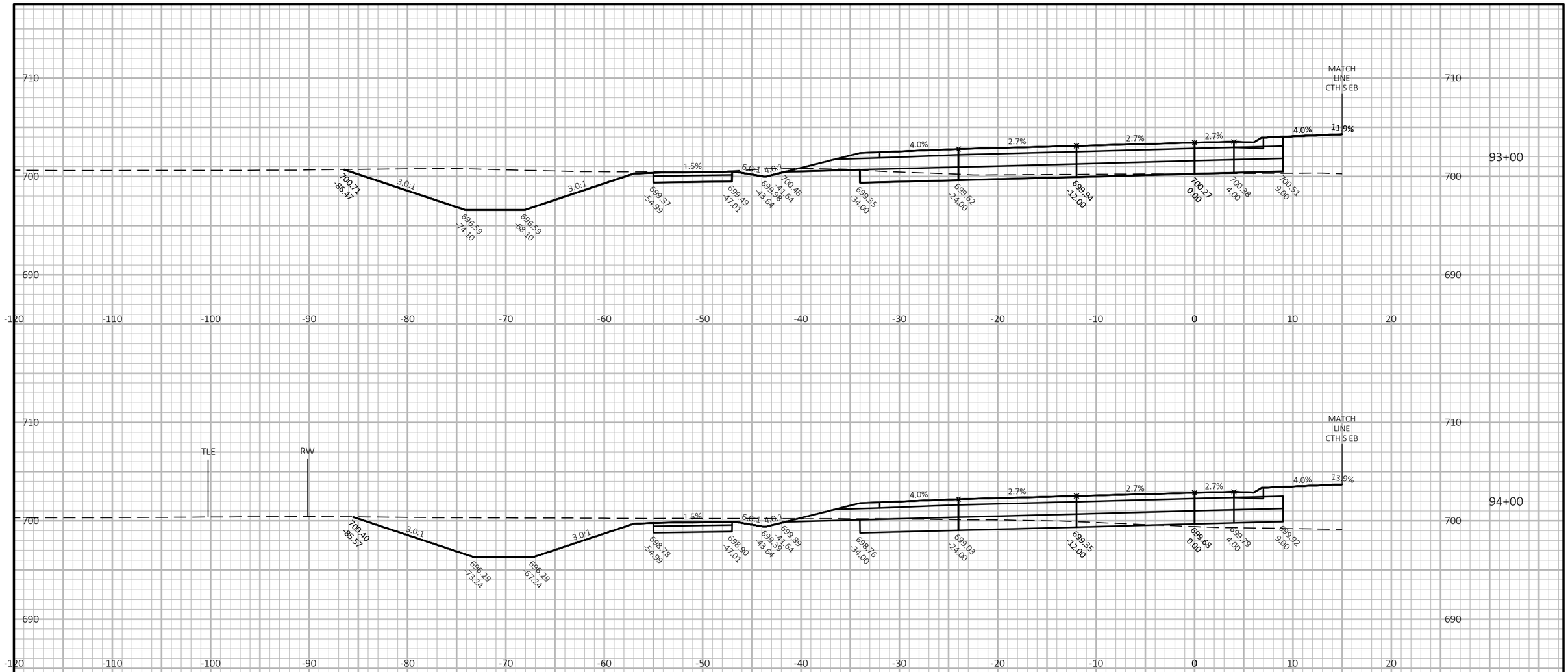

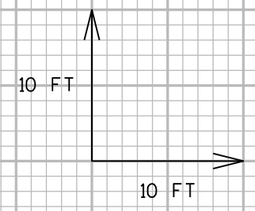

9

9

PROJECT ID: RD16-003	HWY: CTH S	COUNTY: KENOSHA	CROSS SECTIONS: CTH S WESTBOUND	SHEET 369	E

FILE NAME : T:\1165811\CIVIL3D\1165811\SHEETSPLAN\090202-XS.DWG PLOT DATE : 5/12/2020 8:29 AM PLOT BY : GUILLAMA, TINA PLOT NAME :

WISDOT/CADDS SHEET 49

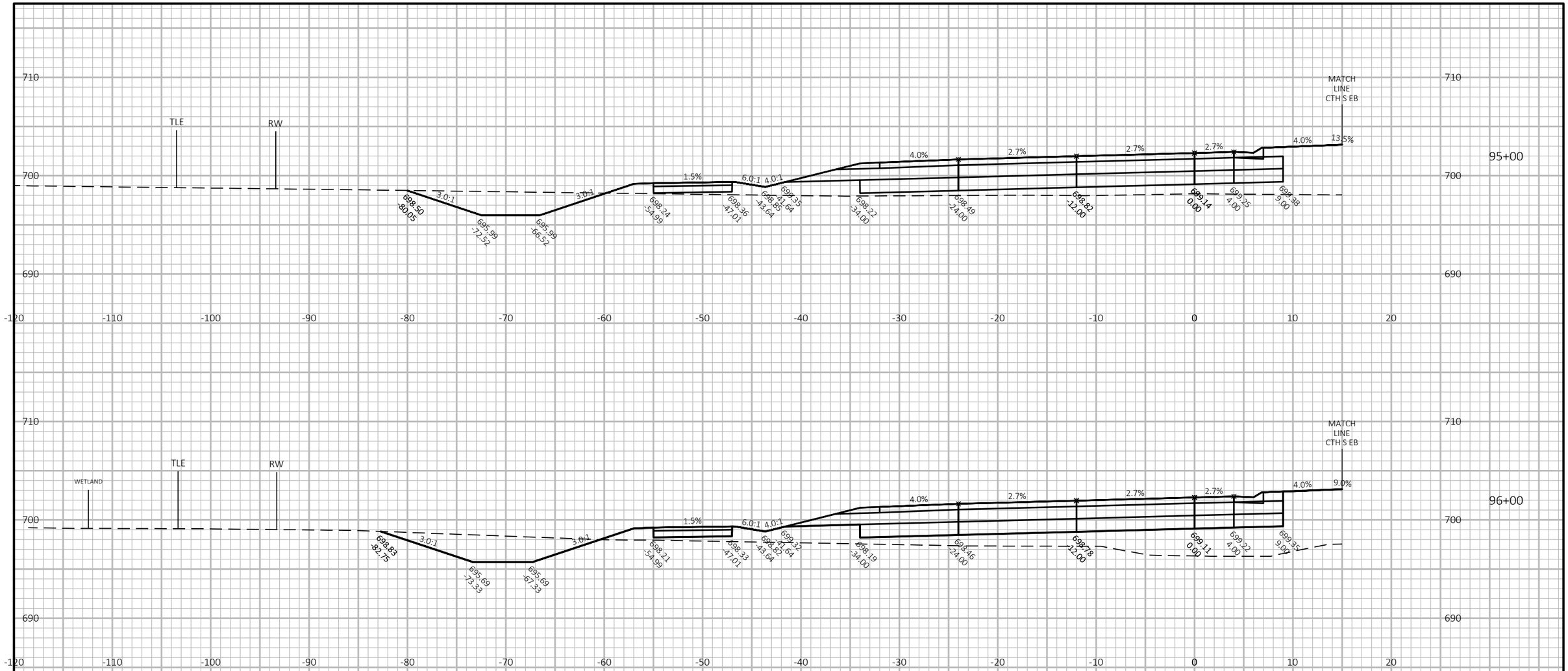

9	PROJECT ID: RD16-003	HWY: CTH S	COUNTY: KENOSHA	CROSS SECTIONS: CTH S WESTBOUND	SHEET 370	E	9

FILE NAME : T:\1165811\CIVIL3D\1165811\SHEETSPLAN\090202-XS.DWG PLOT DATE : 5/12/2020 8:30 AM PLOT BY : GUILLAMA, TINA PLOT NAME :

WISDOT/CADDS SHEET 49

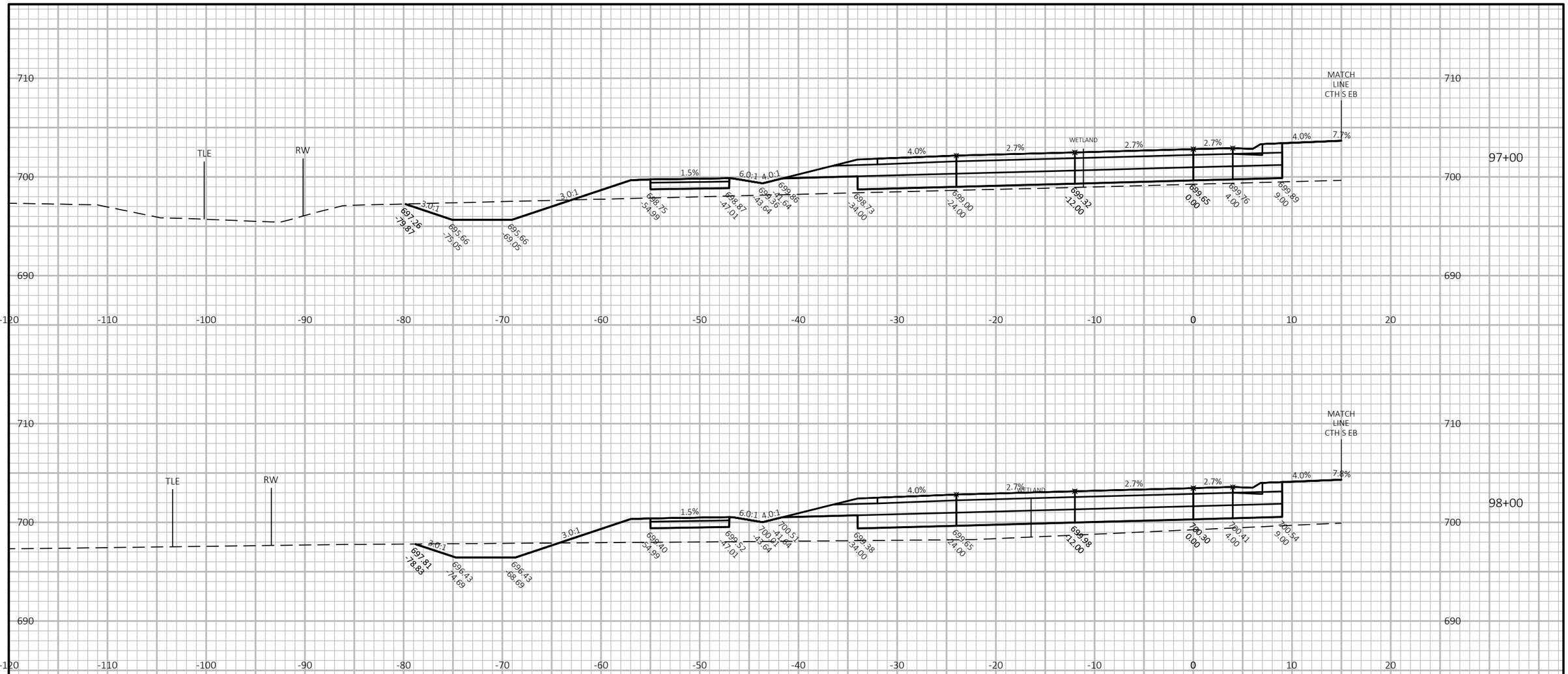

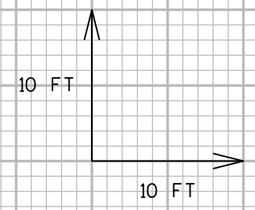

9

9

PROJECT ID: RD16-003	HWY: CTH S	COUNTY: KENOSHA	CROSS SECTIONS: CTH S WESTBOUND	SHEET 371	E

FILE NAME : T:\1165811\CIVIL3D\1165811\SHEETSPLAN\090202-XS.DWG PLOT DATE : 5/12/2020 8:30 AM PLOT BY : GUILLAMA, TINA PLOT NAME :

WISDOT/CADDS SHEET 49

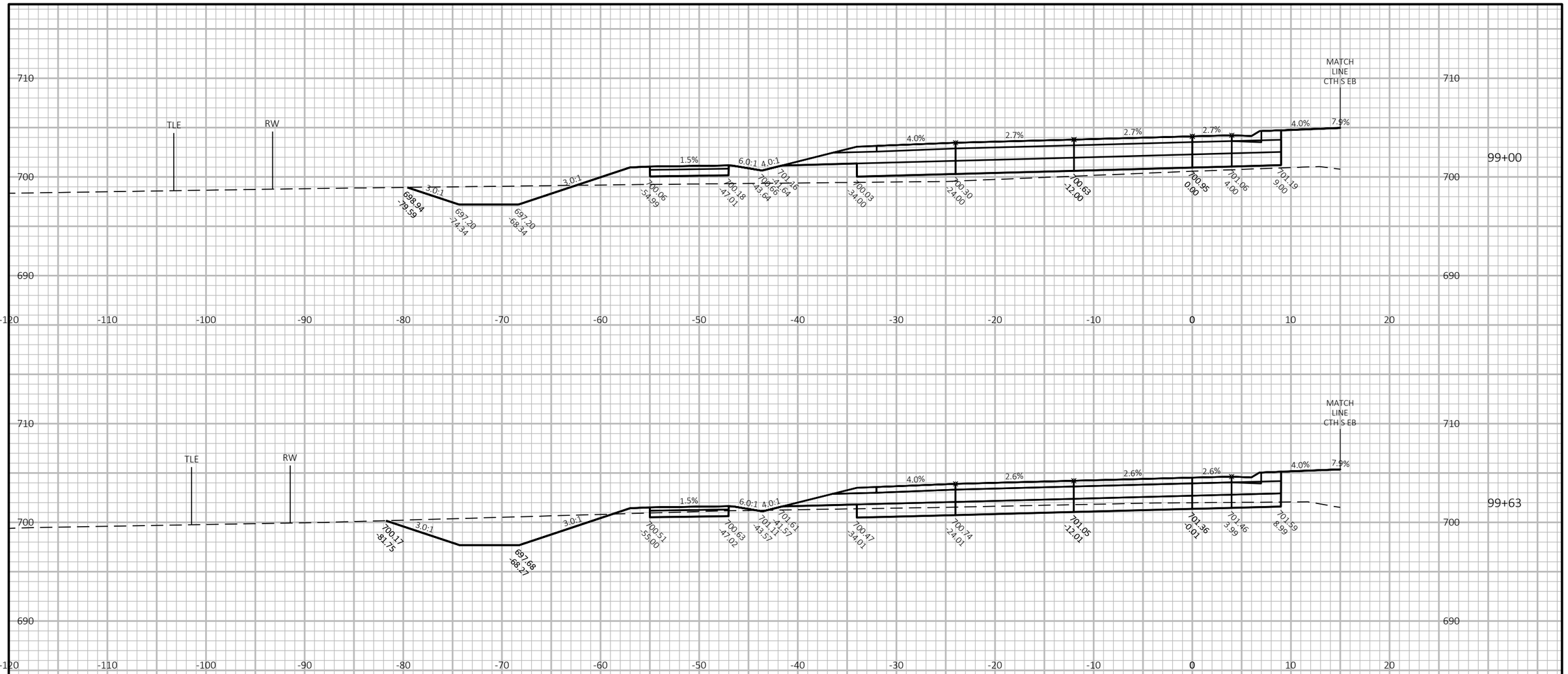

9

9

PROJECT ID: RD16-003	HWY: CTH S	COUNTY: KENOSHA	CROSS SECTIONS: CTH S WESTBOUND	SHEET 372	E

FILE NAME : T:\1165811\CIVIL3D\1165811\SHEETSPLAN\090202-XS.DWG PLOT DATE : 5/12/2020 8:30 AM PLOT BY : GUILLAMA, TINA PLOT NAME :

WISDOT/CADDS SHEET 49

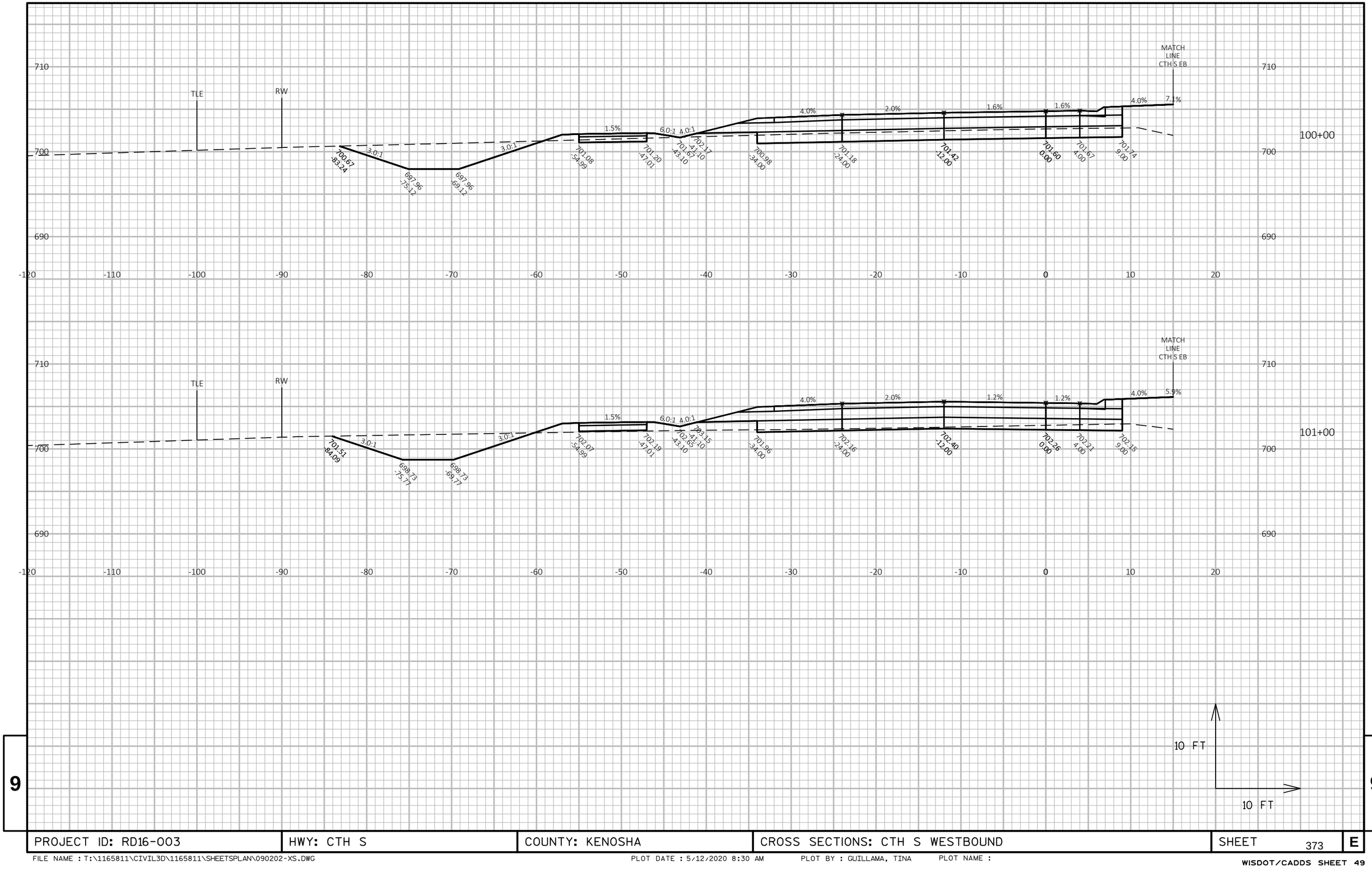

9

9

PROJECT ID: RD16-003	HWY: CTH S	COUNTY: KENOSHA	CROSS SECTIONS: CTH S WESTBOUND	SHEET 373	E

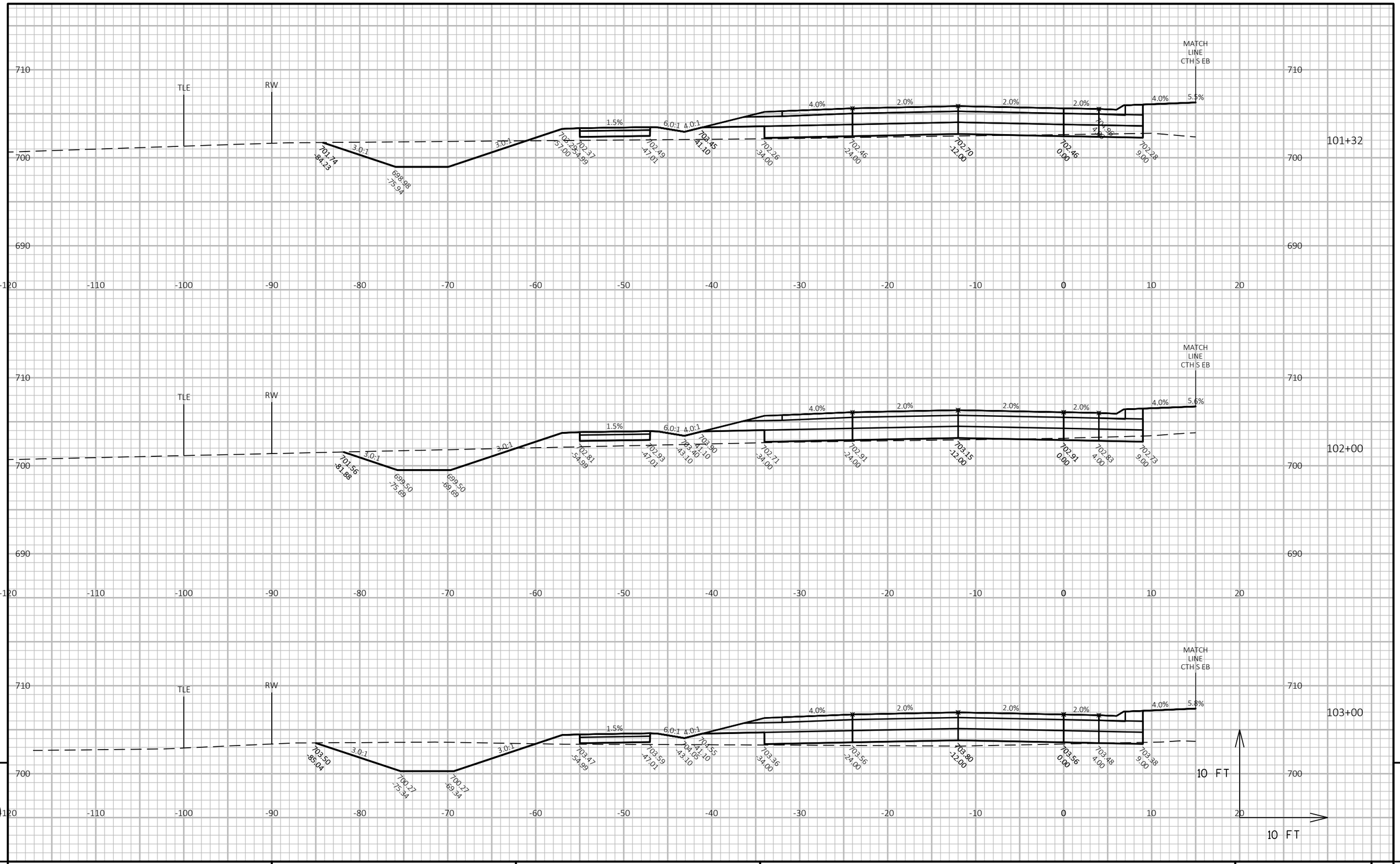

9

9

PROJECT ID: RD16-003	HWY: CTH S	COUNTY: KENOSHA	CROSS SECTIONS: CTH S WESTBOUND	SHEET 374	E

FILE NAME : T:\1165811\CIVIL3D\1165811\SHEETSPLAN\090202-XS.DWG PLOT DATE : 5/12/2020 8:30 AM PLOT BY : GUILLAMA, TINA PLOT NAME :

WISDOT/CADDS SHEET 49

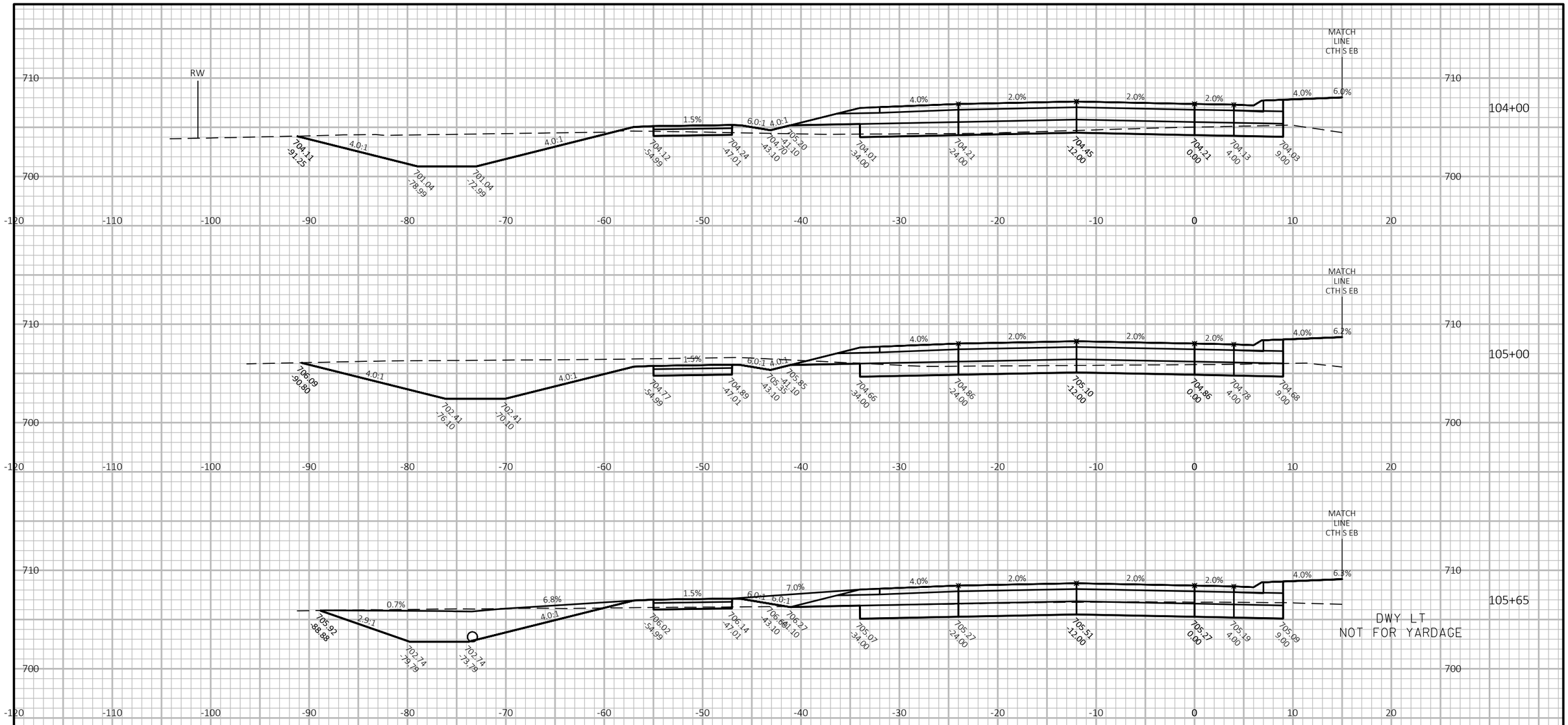

9

PROJECT ID: RD16-003	HWY: CTH S	COUNTY: KENOSHA	CROSS SECTIONS: CTH S WESTBOUND	SHEET 375	E

FILE NAME : T:\1165811\CIVIL3D\1165811\SHEETSPLAN\090202-XS.DWG PLOT DATE : 5/12/2020 8:30 AM PLOT BY : GUILLAMA, TINA PLOT NAME :

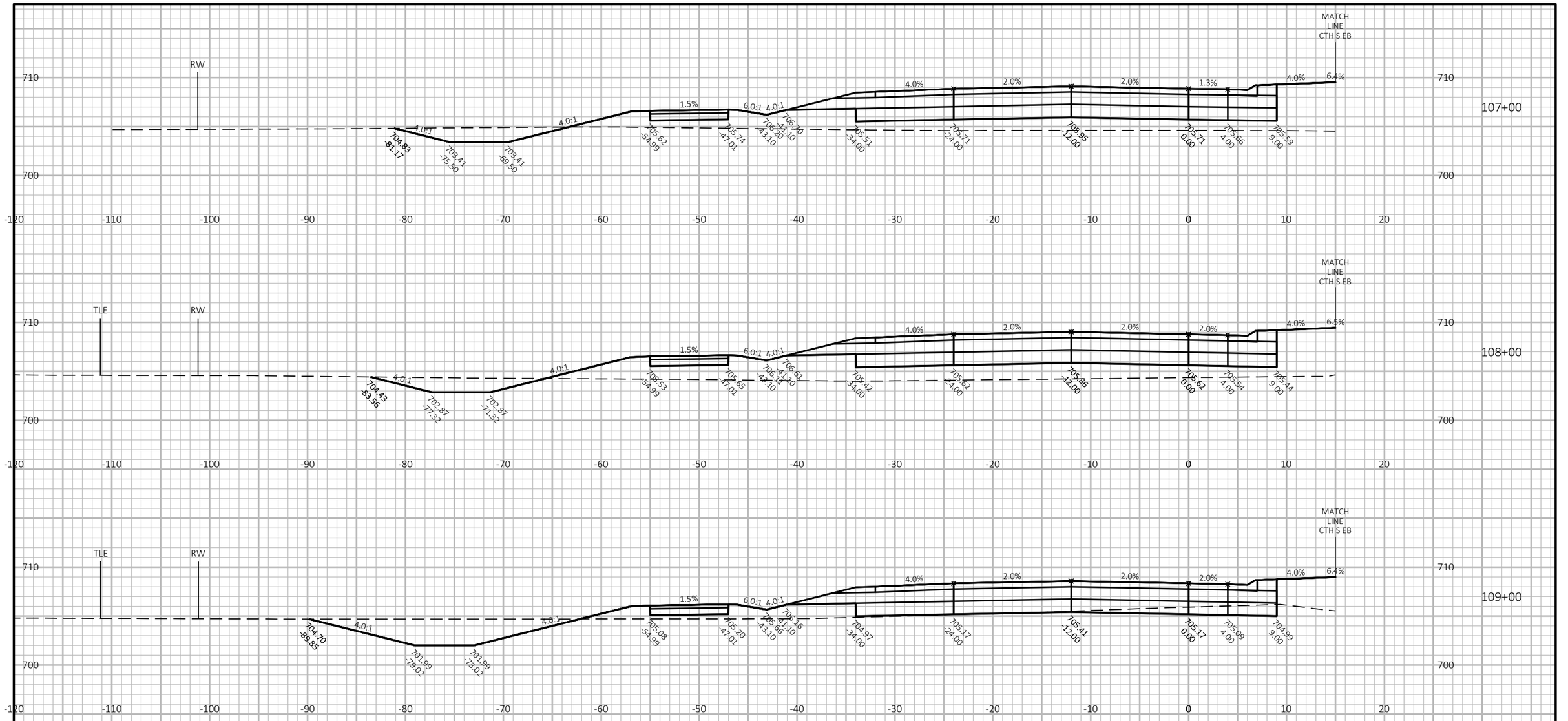

PROJECT ID: RD16-003	HWY: CTH S	COUNTY: KENOSHA	CROSS SECTIONS: CTH S WESTBOUND	SHEET 376	E

FILE NAME : T:\1165811\CIVIL3D\1165811\SHEETSPLAN\090202-XS.DWG PLOT DATE : 5/12/2020 8:31 AM PLOT BY : GUILLAMA, TINA PLOT NAME :

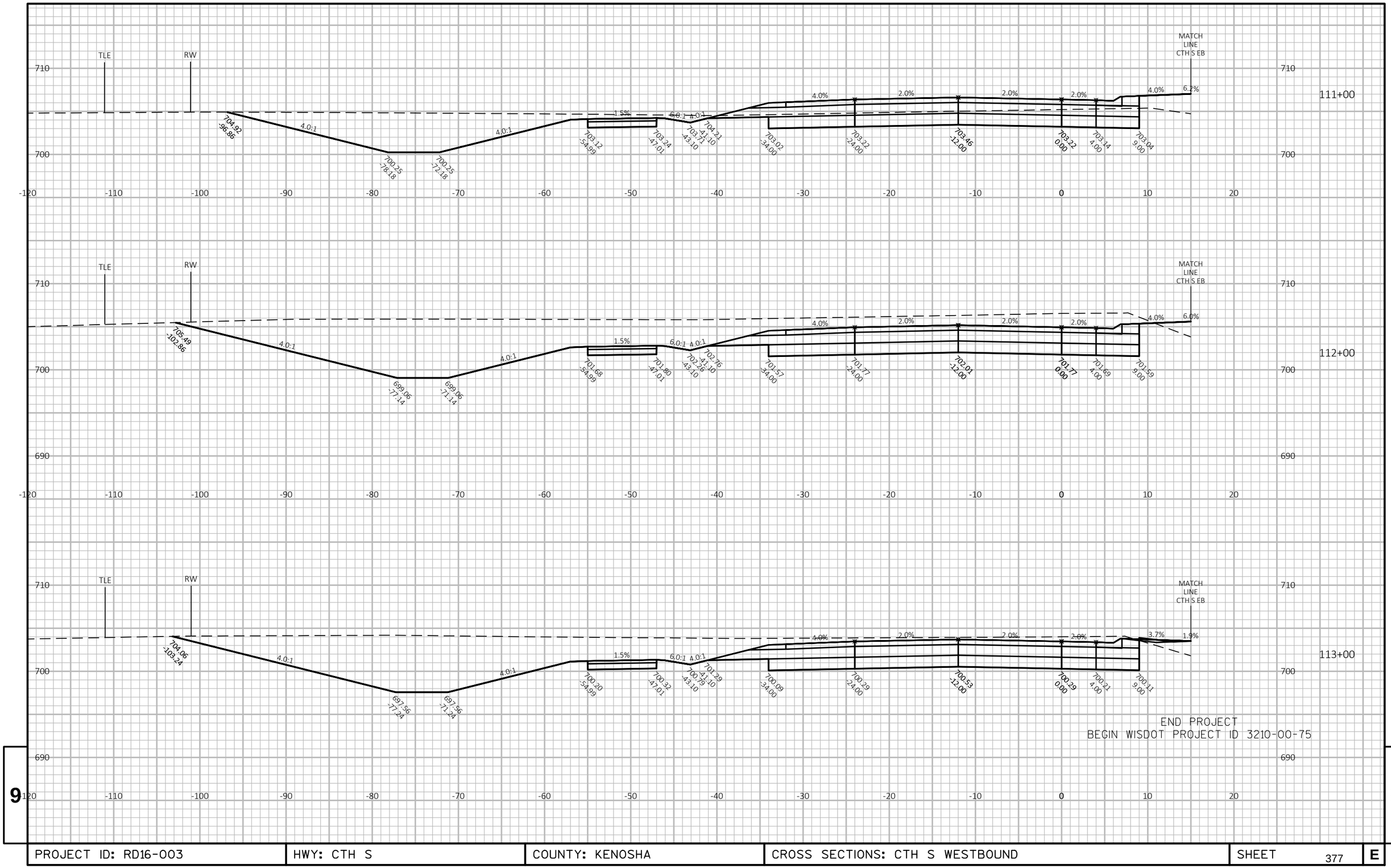

PROJECT ID: RD16-003	HWY: CTH S	COUNTY: KENOSHA	CROSS SECTIONS: CTH S WESTBOUND	SHEET 377 E

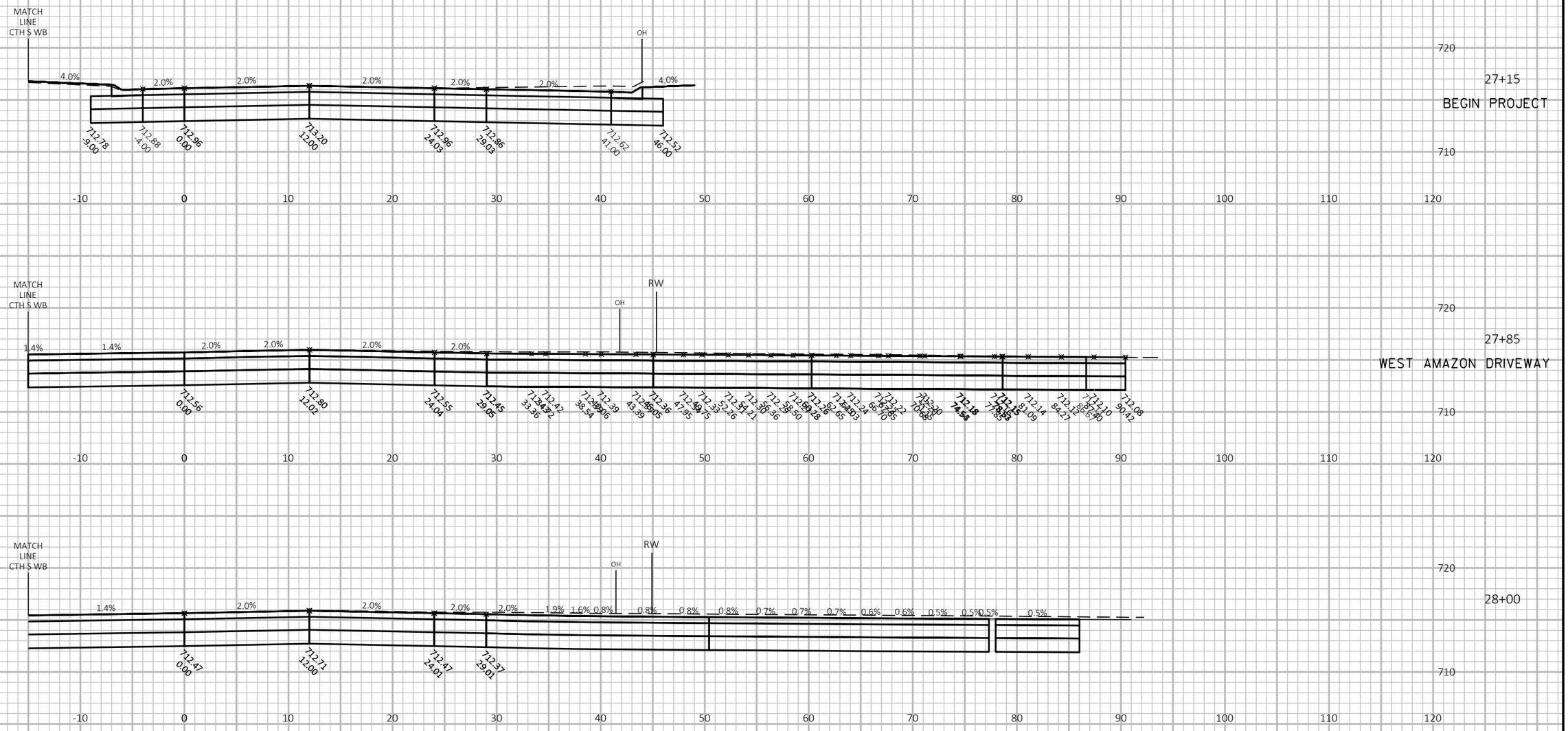

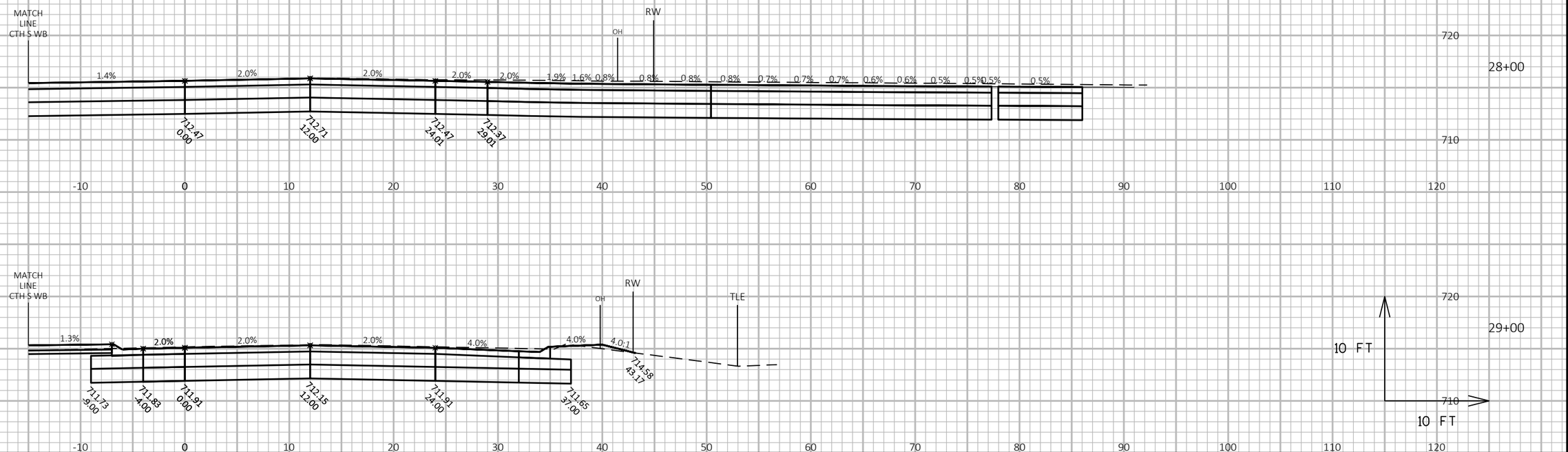

9

9

PROJECT ID: RD16-003	HWY: CTH S	COUNTY: KENOSHA	CROSS SECTIONS: CTH S EASTBOUND	SHEET 378	E

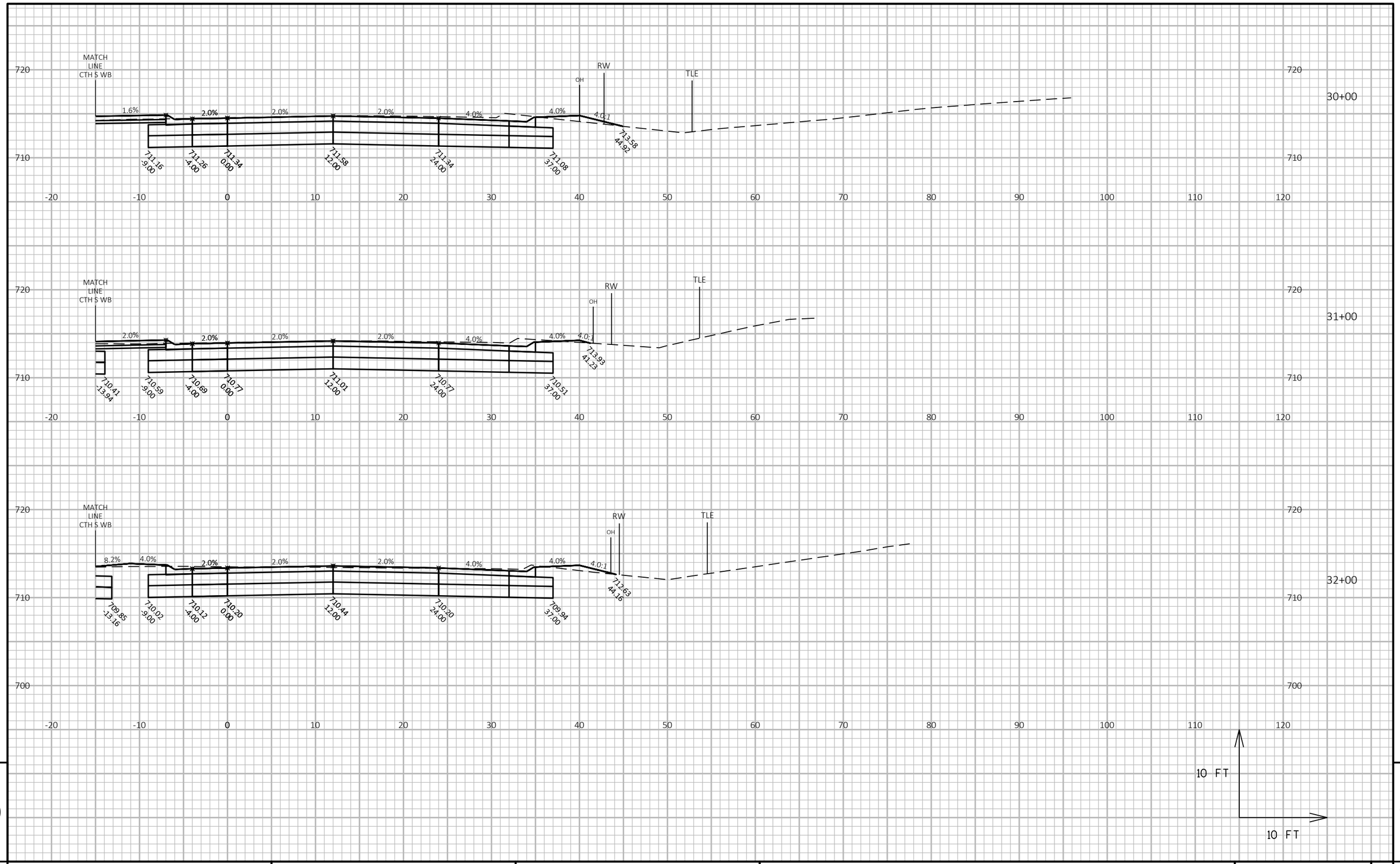

9

9

PROJECT ID: RD16-003	HWY: CTH S	COUNTY: KENOSHA	CROSS SECTIONS: CTH S EASTBOUND	SHEET 379	E

FILE NAME : T:\1165811\CIVIL3D\1165811\SHEETSPLAN\090201-XS.DWG PLOT DATE : 5/12/2020 7:54 AM PLOT BY : GUILLAMA, TINA PLOT NAME :

WISDOT/CADDS SHEET 49

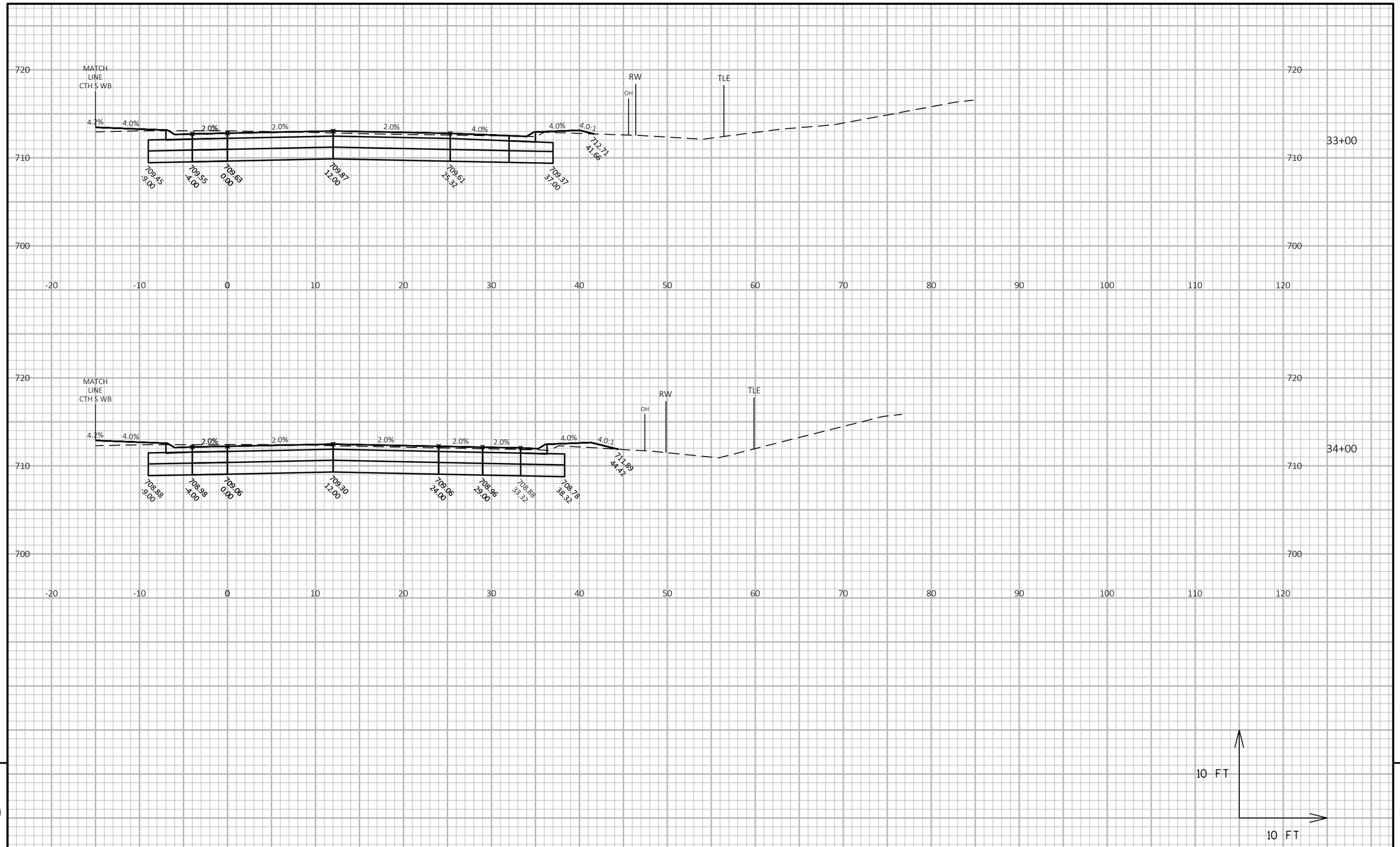

9

9

PROJECT ID: RD16-003	HWY: CTH S	COUNTY: KENOSHA	CROSS SECTIONS: CTH S EASTBOUND	SHEET 380	E

FILE NAME : T:\1165811\CIVIL3D\1165811\SHEETSPLAN\090201-XS.DWG PLOT DATE : 5/12/2020 7:54 AM PLOT BY : GUILLAMA, TINA PLOT NAME :

WISDOT/CADDS SHEET 49

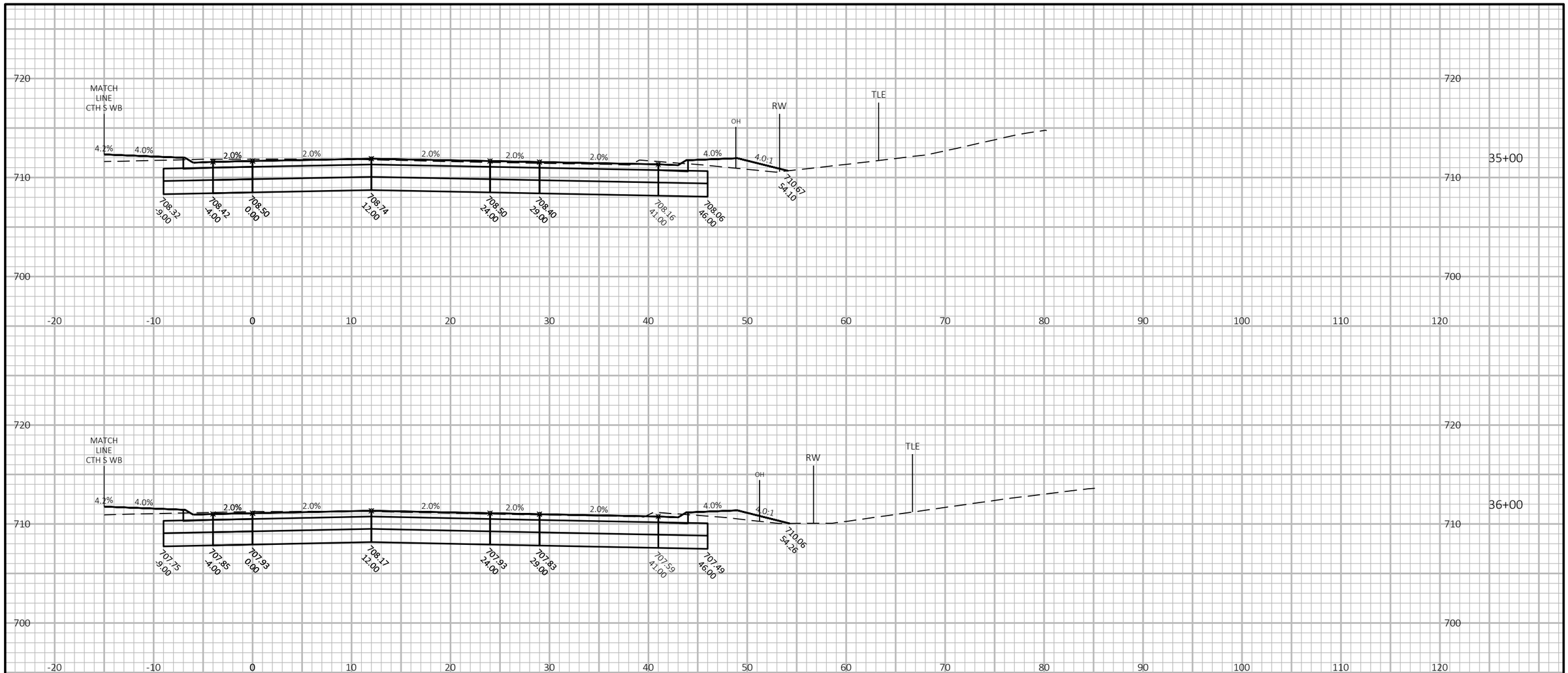

9

9

PROJECT ID: RD16-003	HWY: CTH S	COUNTY: KENOSHA	CROSS SECTIONS: CTH S EASTBOUND	SHEET 381	E

FILE NAME : T:\1165811\CIVIL3D\1165811\SHEETSPLAN\090201-XS.DWG PLOT DATE : 5/12/2020 7:54 AM PLOT BY : GUILLAMA, TINA PLOT NAME :

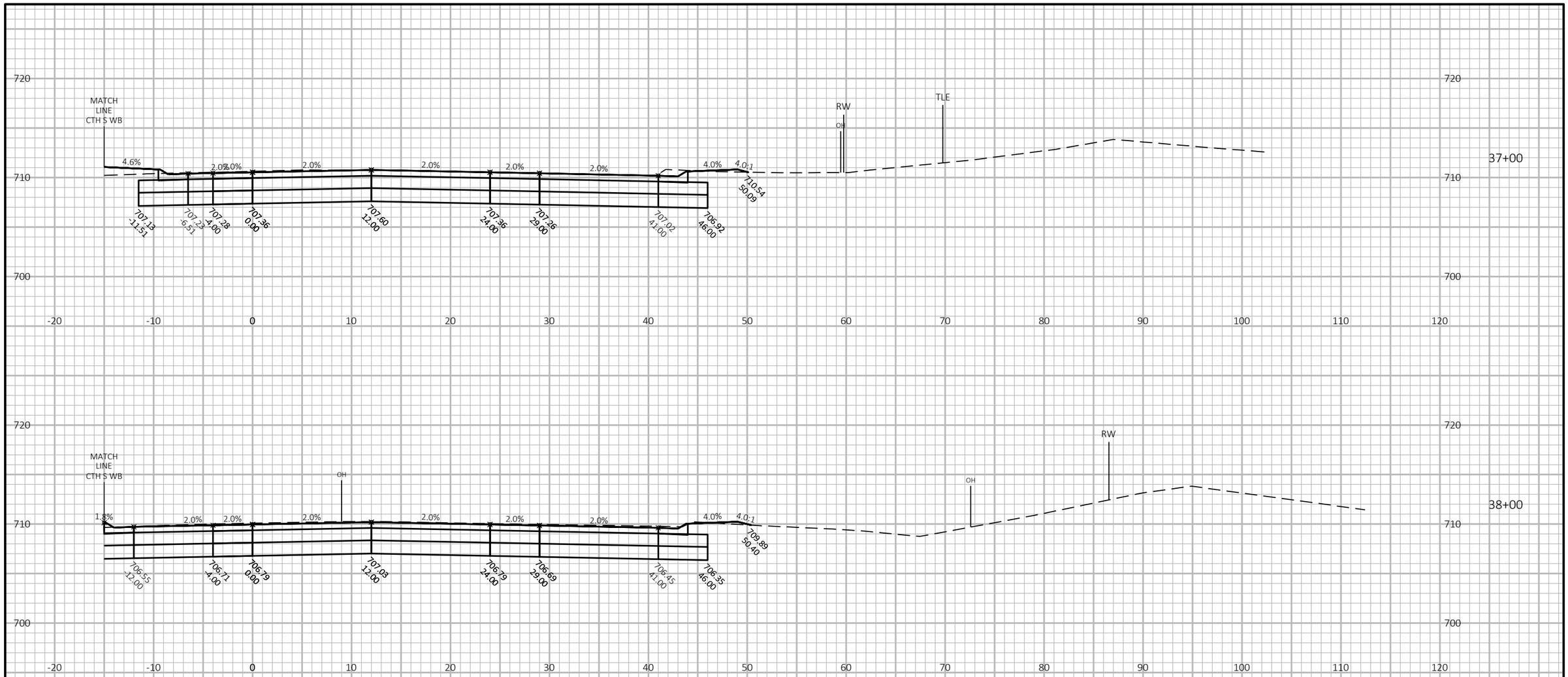

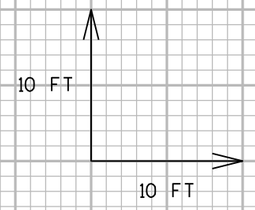

9

9

PROJECT ID: RD16-003	HWY: CTH S	COUNTY: KENOSHA	CROSS SECTIONS: CTH S EASTBOUND	SHEET 382	E

FILE NAME : T:\1165811\CIVIL3D\1165811\SHEETSPLAN\090201-XS.DWG PLOT DATE : 5/12/2020 7:54 AM PLOT BY : GUILLAMA, TINA PLOT NAME :

WISDOT/CADDS SHEET 49

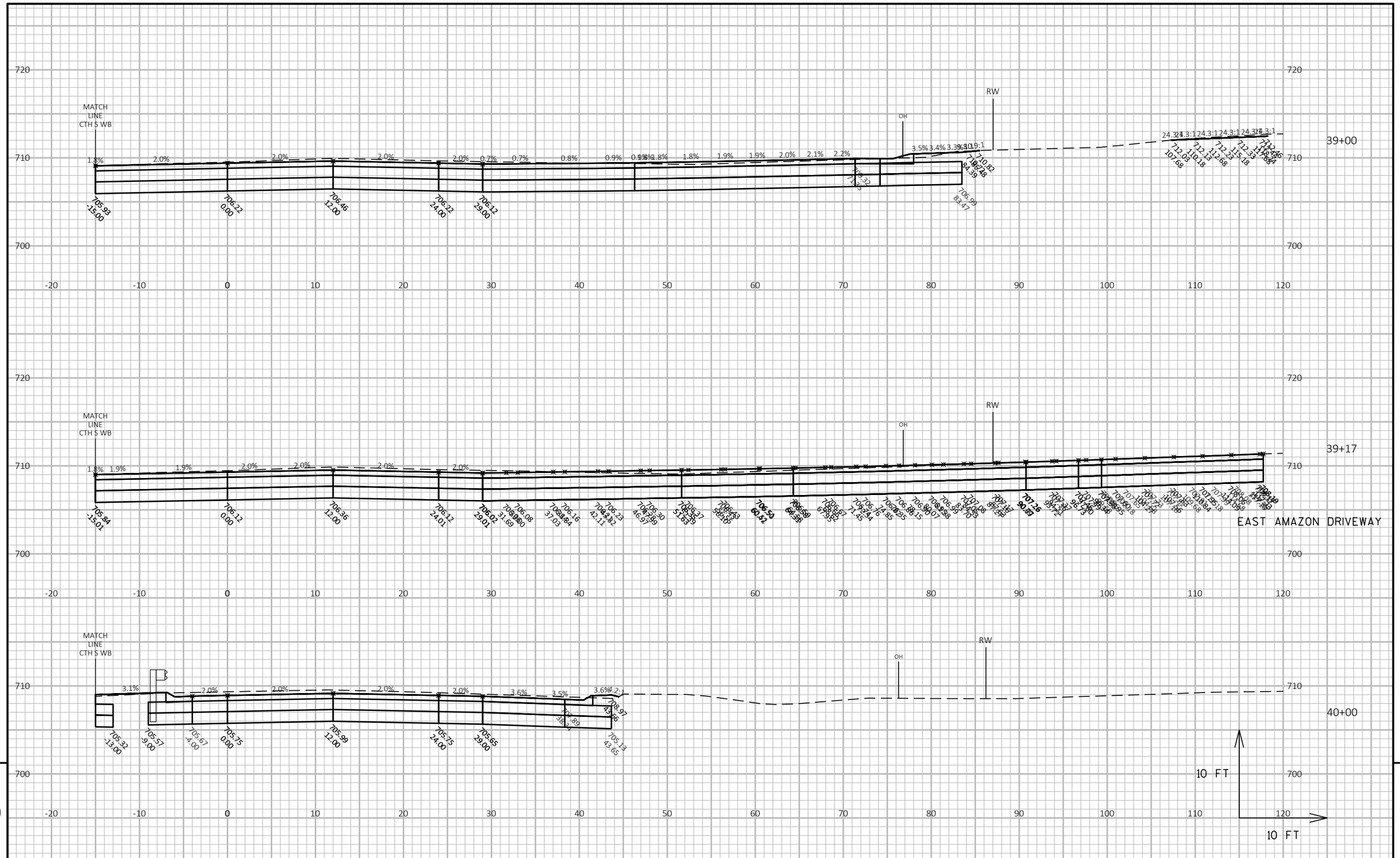

PROJECT ID: RD16-003	HWY: CTH S	COUNTY: KENOSHA	CROSS SECTIONS: CTH S EASTBOUND	SHEET 383	E

FILE NAME : T:\1165811\CIVIL3D\1165811\SHEETSPLAN\090201-XS.DWG PLOT DATE : 5/12/2020 7:55 AM PLOT BY : GUILLAMA, TINA PLOT NAME :

WISDOT/CADDS SHEET 49

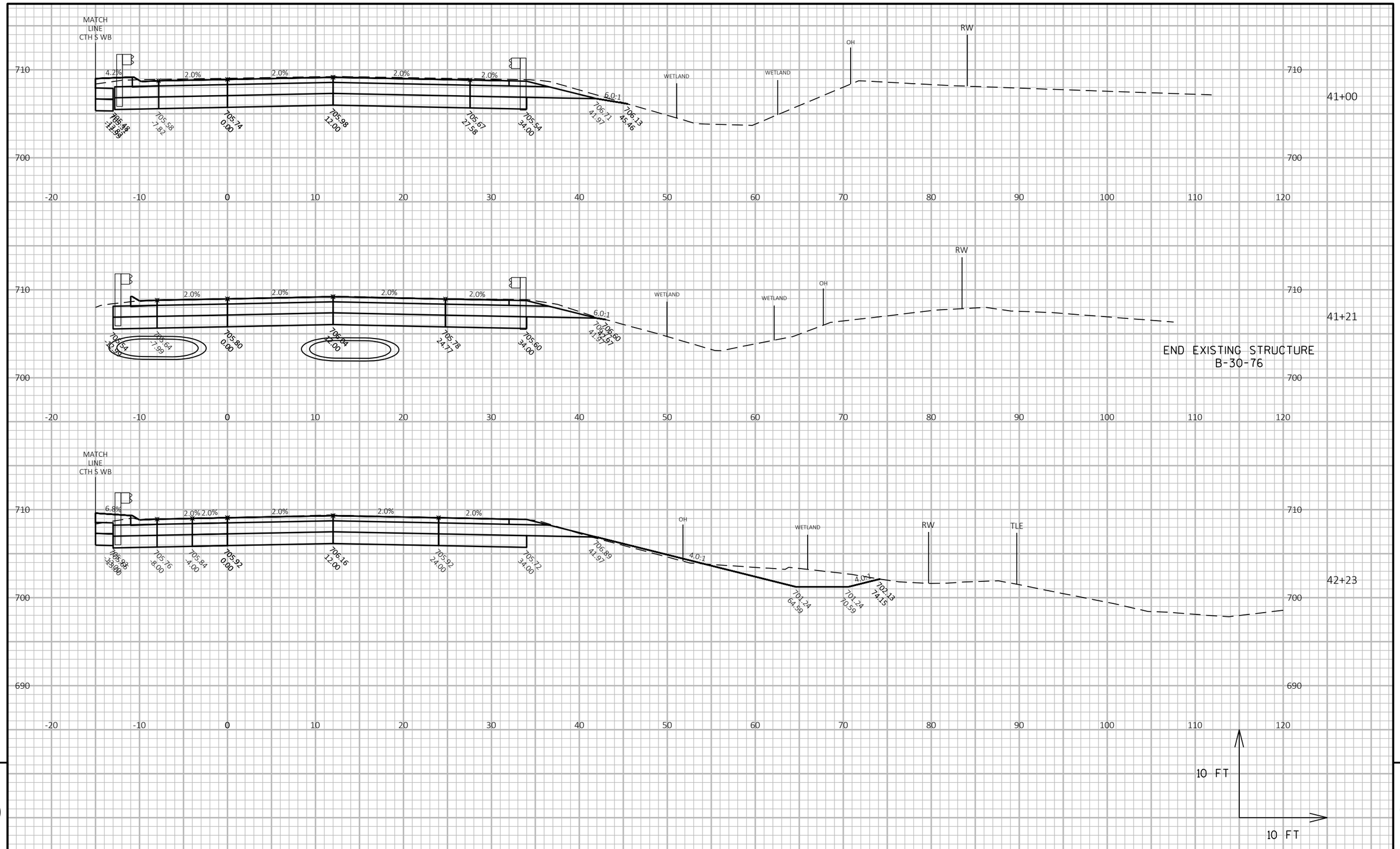

9

9

PROJECT ID: RD16-003	HWY: CTH S	COUNTY: KENOSHA	CROSS SECTIONS: CTH S EASTBOUND	SHEET 384	E

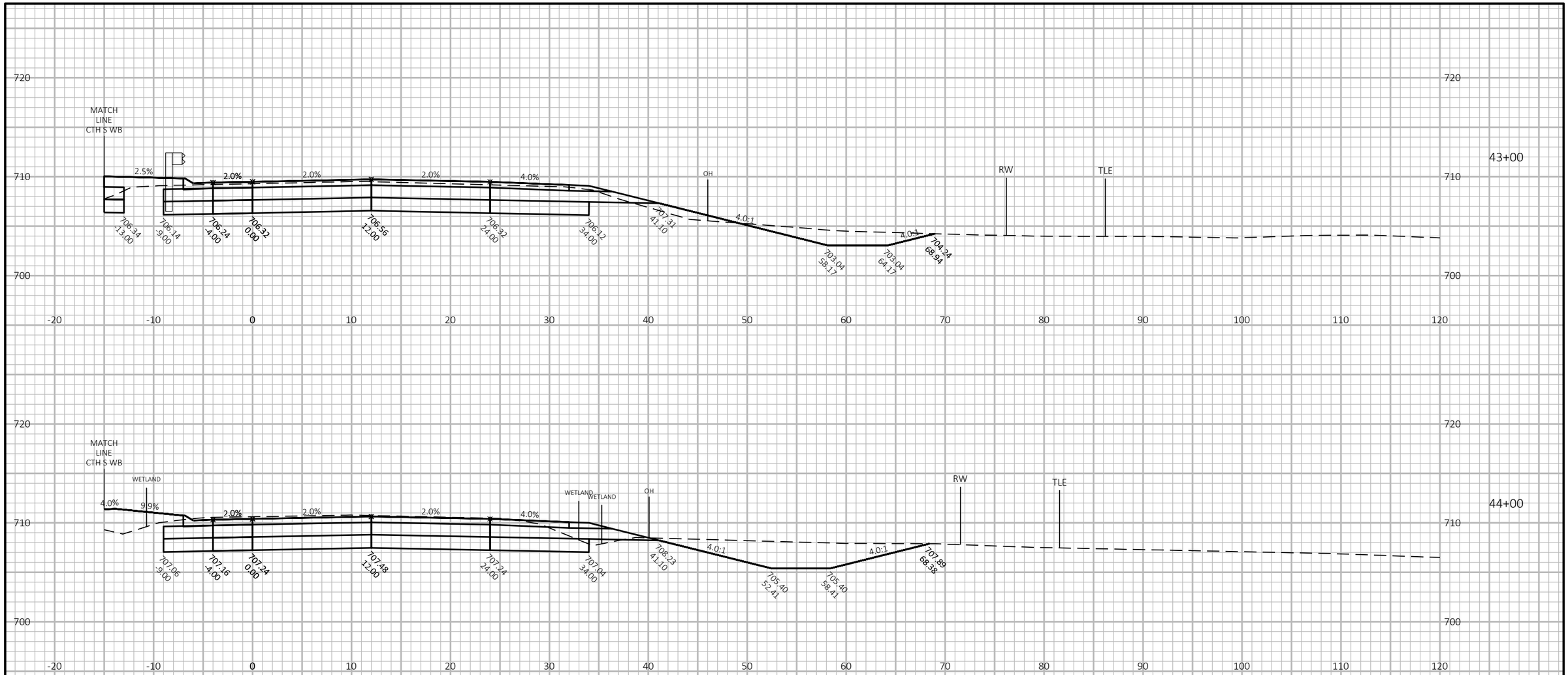

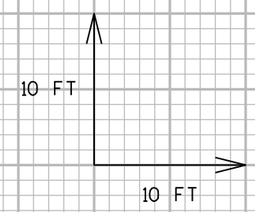

9

9

PROJECT ID: RD16-003	HWY: CTH S	COUNTY: KENOSHA	CROSS SECTIONS: CTH S EASTBOUND	SHEET 385	E

FILE NAME : T:\1165811\CIVIL3D\1165811\SHEETSPLAN\090201-XS.DWG PLOT DATE : 5/12/2020 7:55 AM PLOT BY : GUILLAMA, TINA PLOT NAME :

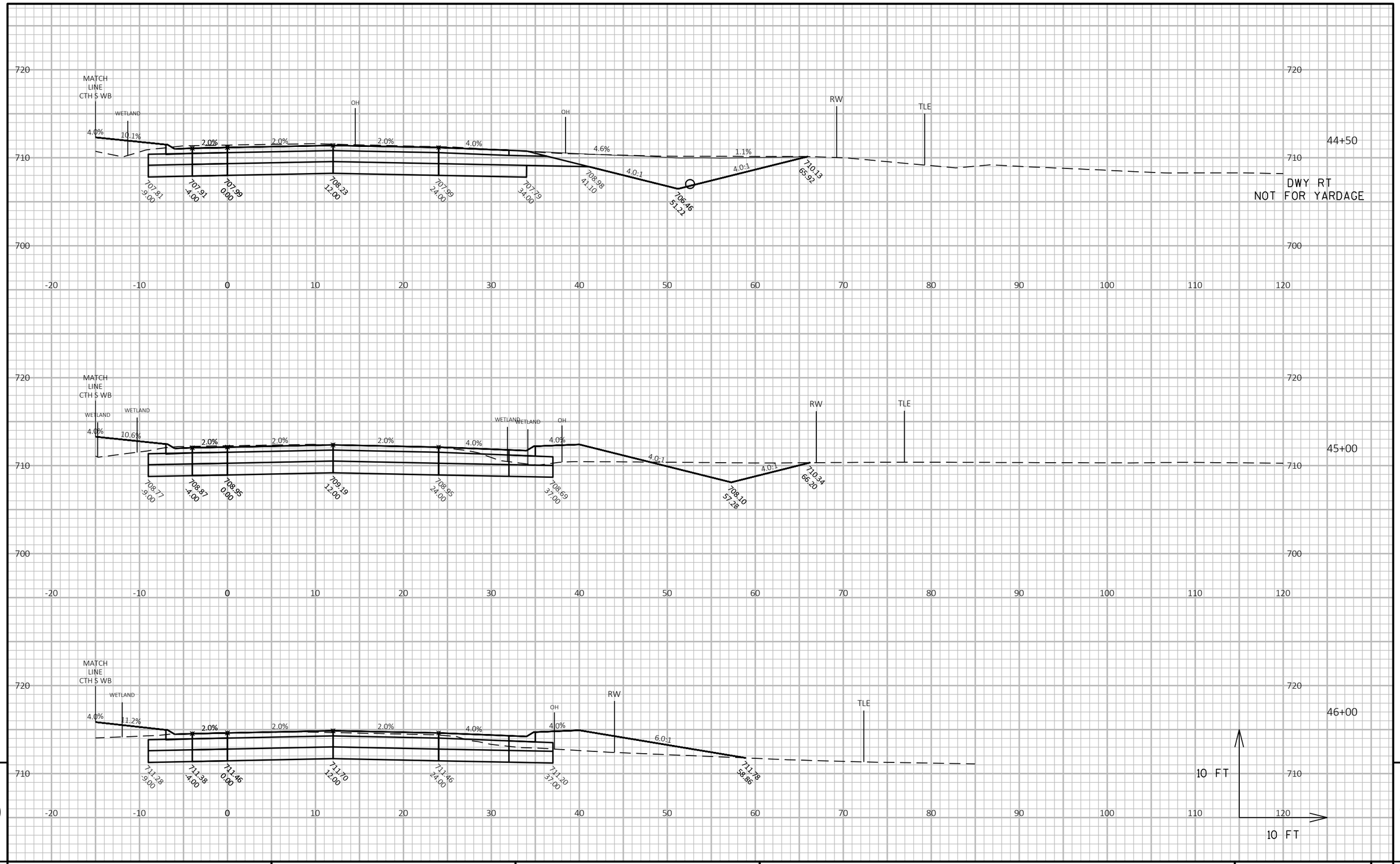

PROJECT ID: RD16-003	HWY: CTH S	COUNTY: KENOSHA	CROSS SECTIONS: CTH S EASTBOUND	SHEET 386	E

FILE NAME : T:\1165811\CIVIL3D\1165811\SHEETSPLAN\090201-XS.DWG PLOT DATE : 5/12/2020 7:55 AM PLOT BY : GUILLAMA, TINA PLOT NAME :

WISDOT/CADDS SHEET 49

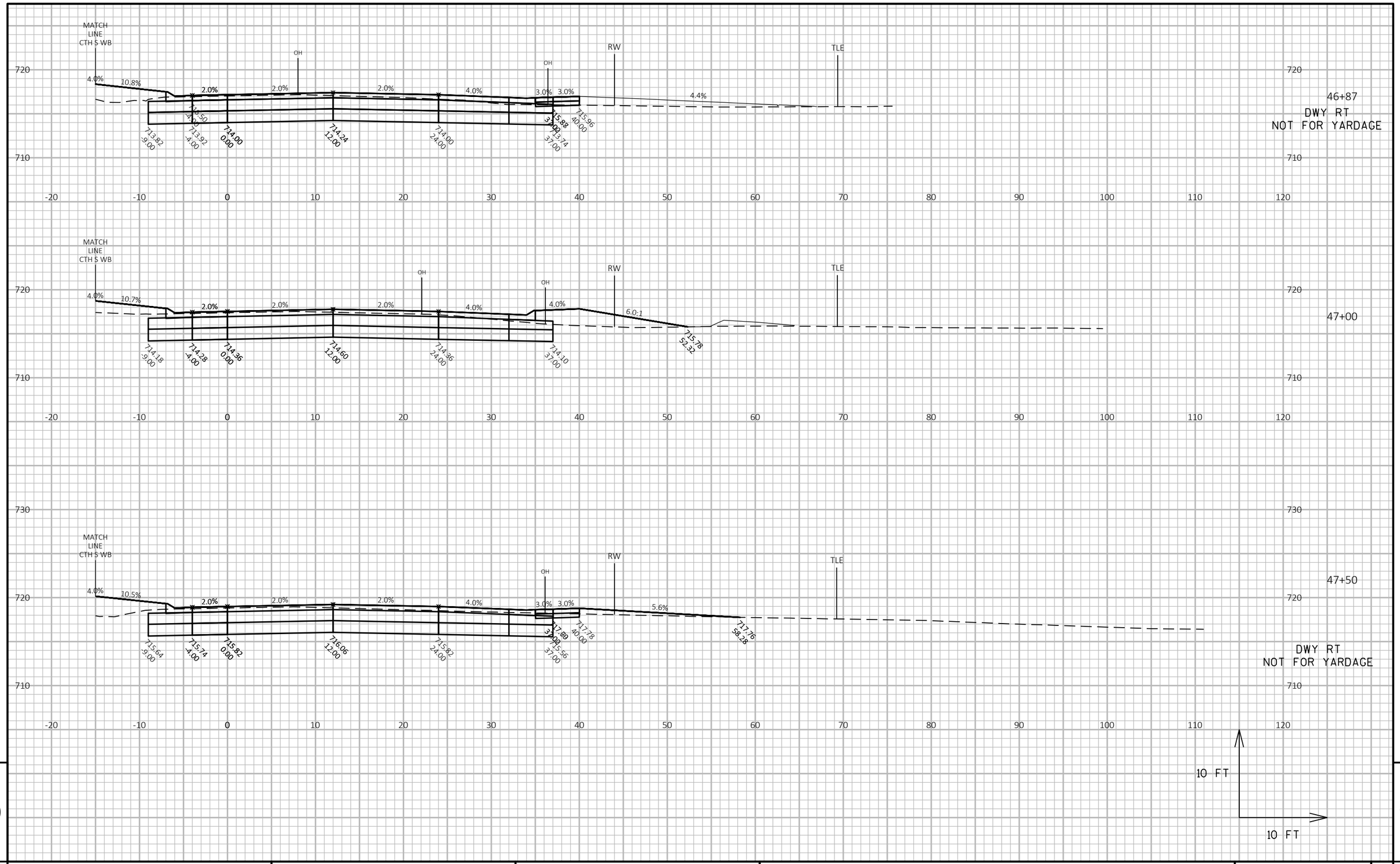

9

9

PROJECT ID: RD16-003	HWY: CTH S	COUNTY: KENOSHA	CROSS SECTIONS: CTH S EASTBOUND	SHEET 387	E

FILE NAME : T:\1165811\CIVIL3D\1165811\SHEETSPLAN\090201-XS.DWG PLOT DATE : 5/12/2020 7:55 AM PLOT BY : GUILLAMA, TINA PLOT NAME :

WISDOT/CADDS SHEET 49

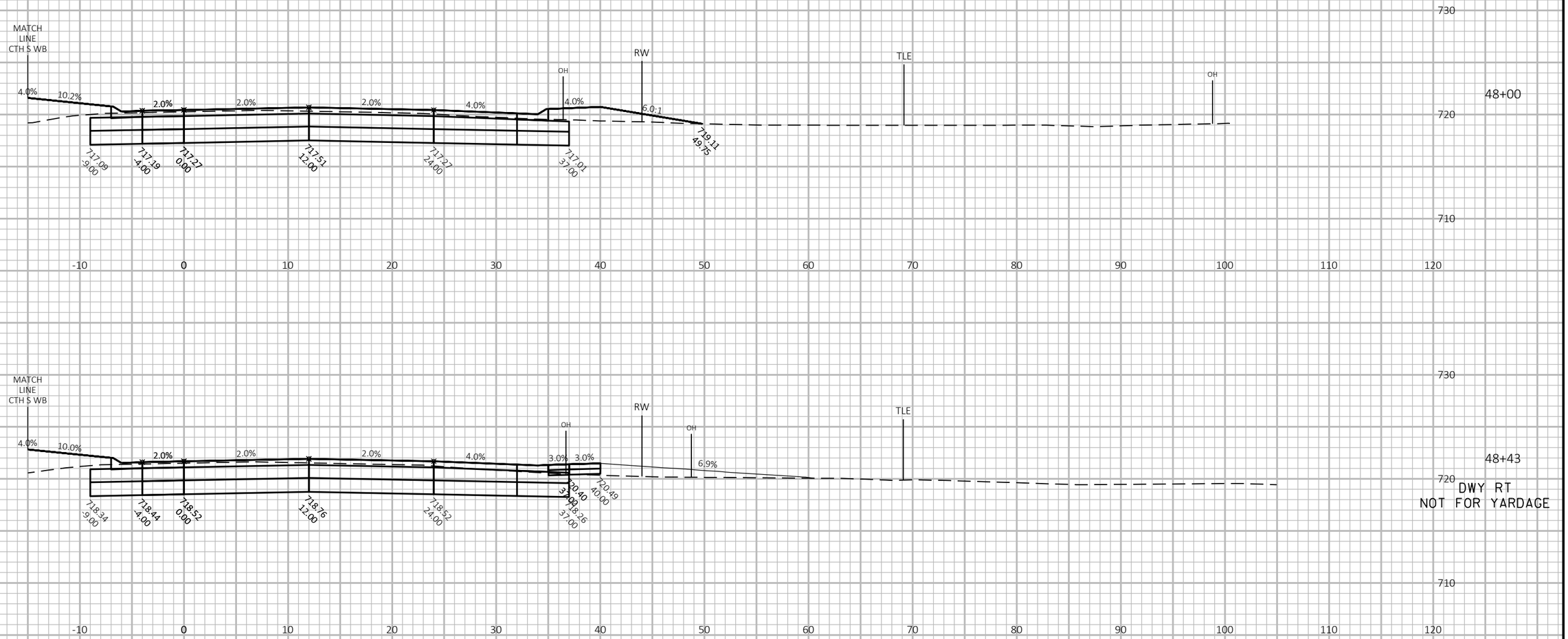

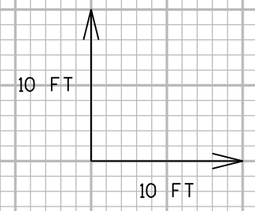

9

9

PROJECT ID: RD16-003	HWY: CTH S	COUNTY: KENOSHA	CROSS SECTIONS: CTH S EASTBOUND	SHEET 388	E

FILE NAME : T:\1165811\CIVIL3D\1165811\SHEETSPLAN\090201-XS.DWG PLOT DATE : 5/12/2020 7:56 AM PLOT BY : GUILLAMA, TINA PLOT NAME :

WISDOT/CADDS SHEET 49

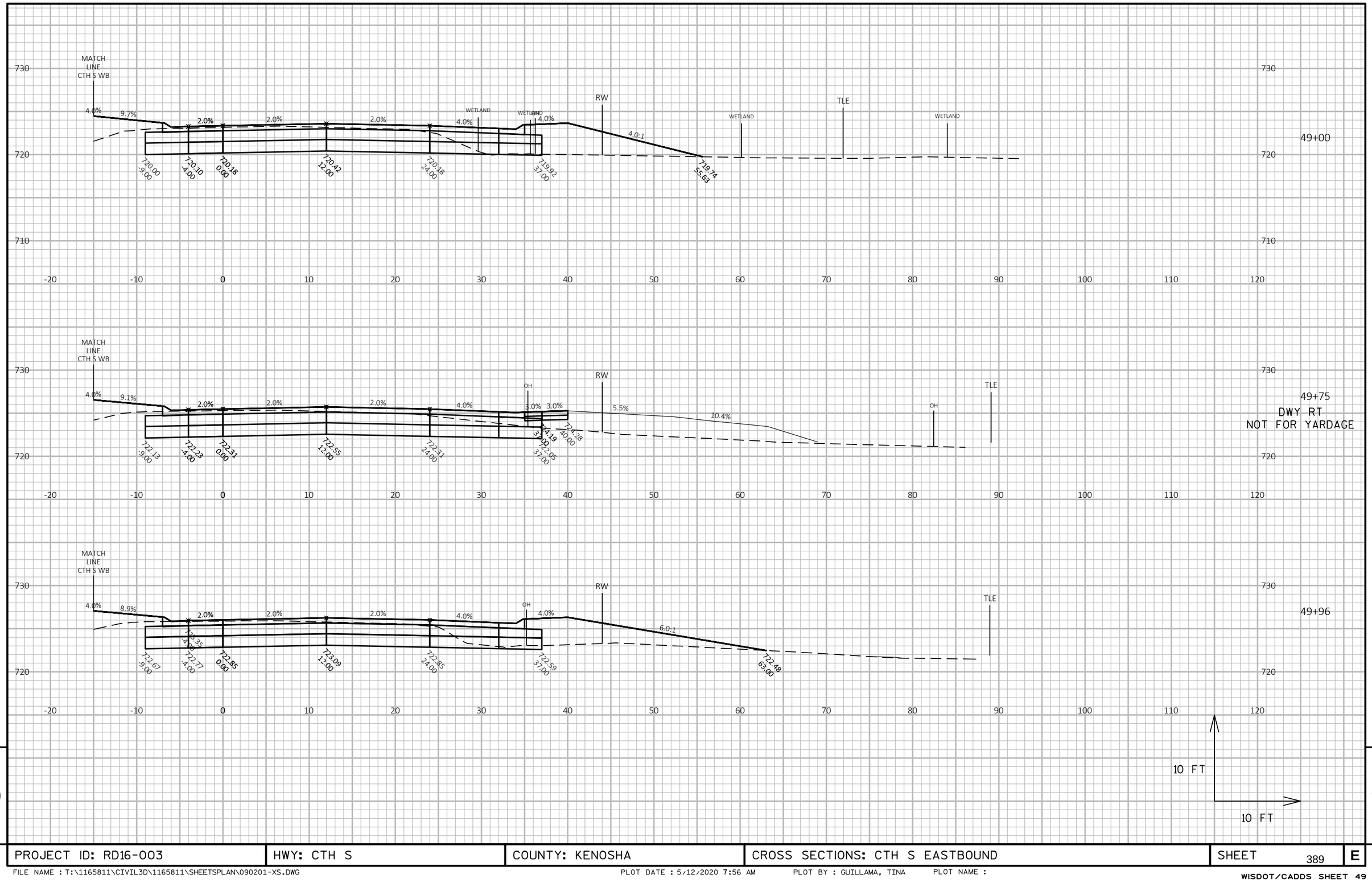

9

9

PROJECT ID: RD16-003	HWY: CTH S	COUNTY: KENOSHA	CROSS SECTIONS: CTH S EASTBOUND	SHEET 389	E

FILE NAME : T:\1165811\CIVIL3D\1165811\SHEETSPLAN\090201-XS.DWG PLOT DATE : 5/12/2020 7:56 AM PLOT BY : GUILLAMA, TINA PLOT NAME :

WISDOT/CADDS SHEET 49

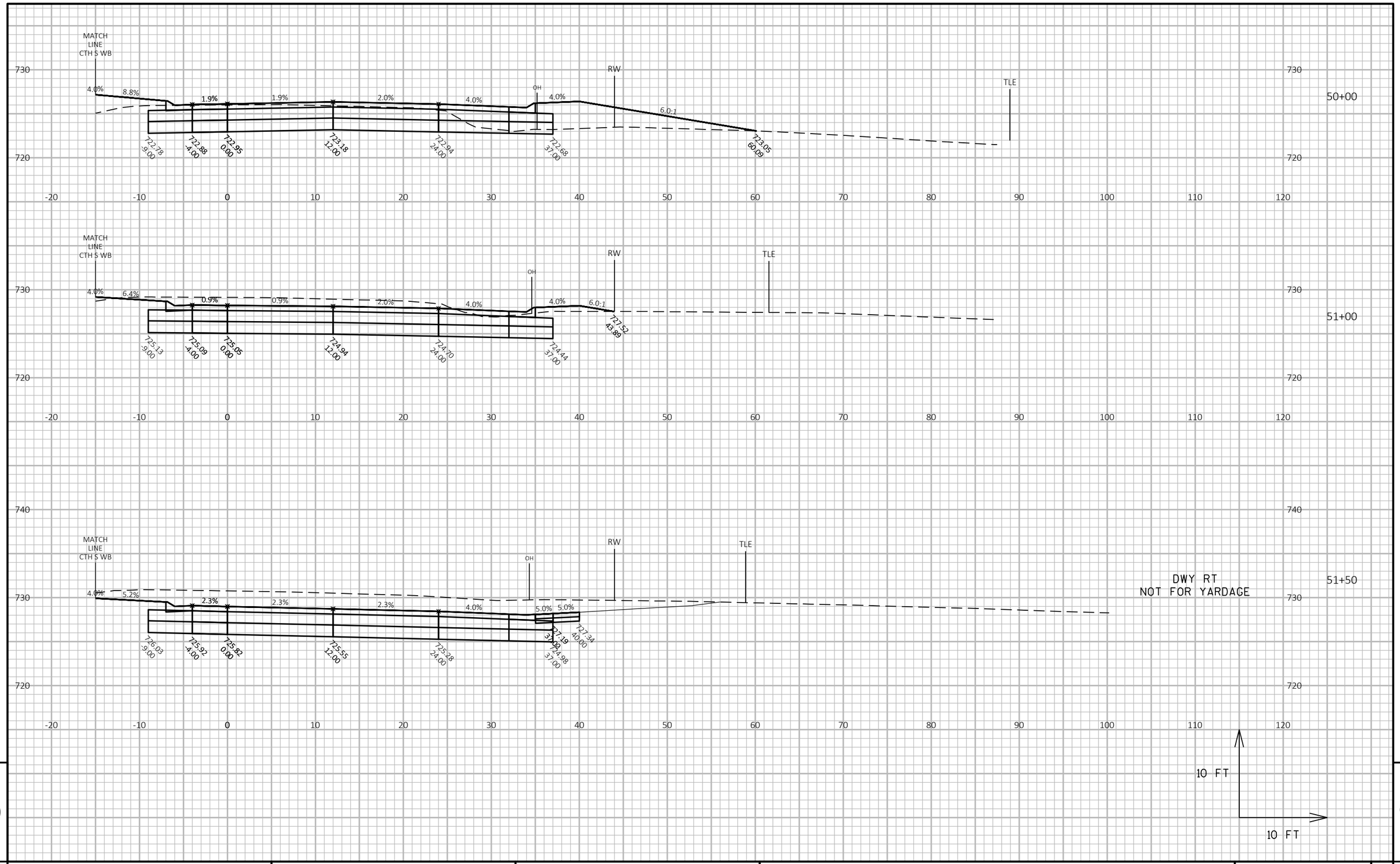

PROJECT ID: RD16-003	HWY: CTH S	COUNTY: KENOSHA	CROSS SECTIONS: CTH S EASTBOUND	SHEET 390	E

FILE NAME : T:\1165811\CIVIL3D\1165811\SHEETSPLAN\090201-XS.DWG PLOT DATE : 5/12/2020 7:56 AM PLOT BY : GUILLAMA, TINA PLOT NAME :

WISDOT/CADDS SHEET 49

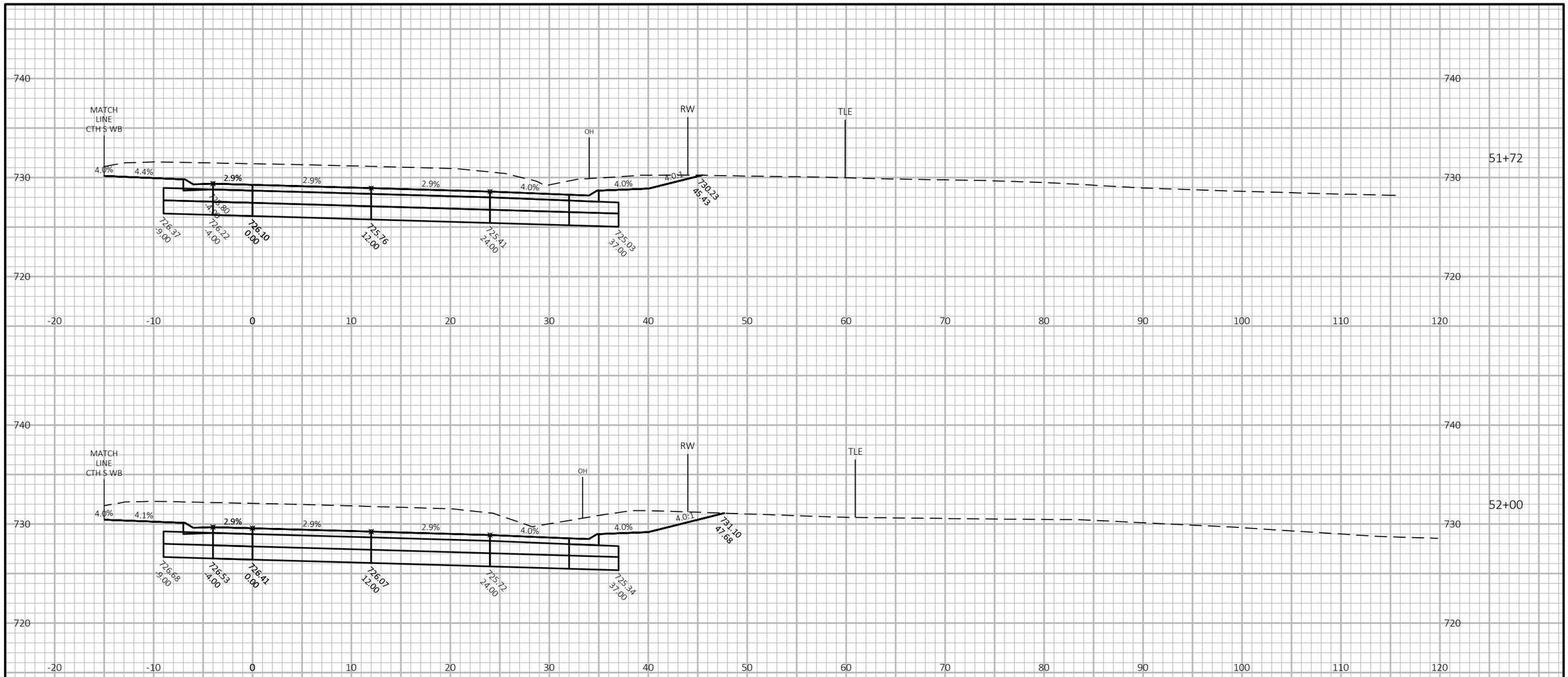

9

9

PROJECT ID: RD16-003	HWY: CTH S	COUNTY: KENOSHA	CROSS SECTIONS: CTH S EASTBOUND	SHEET 391	E

FILE NAME : T:\1165811\CIVIL3D\1165811\SHEETSPLAN\090201-XS.DWG PLOT DATE : 5/12/2020 7:56 AM PLOT BY : GUILLAMA, TINA PLOT NAME :

WISDOT/CADDS SHEET 49

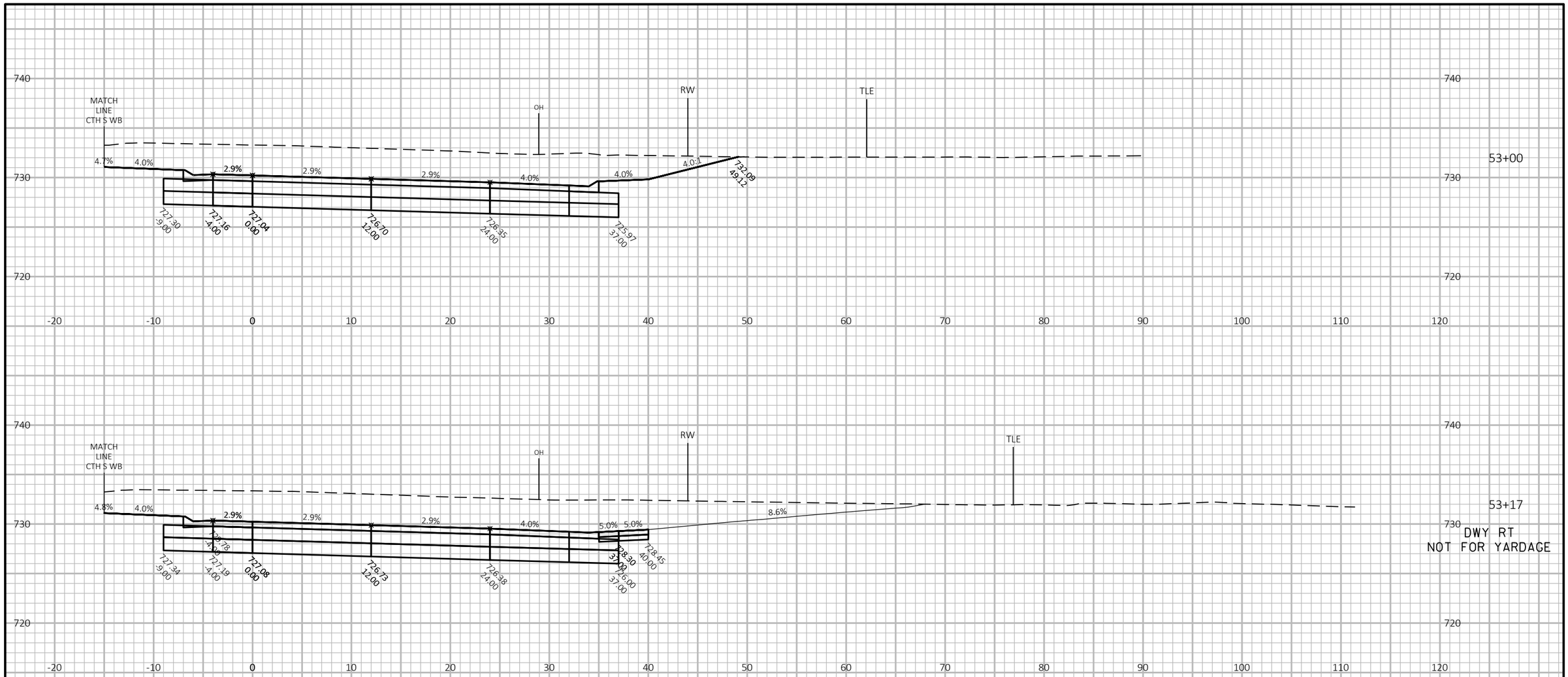

9

9

PROJECT ID: RD16-003	HWY: CTH S	COUNTY: KENOSHA	CROSS SECTIONS: CTH S EASTBOUND	SHEET 392	E

FILE NAME : T:\1165811\CIVIL3D\1165811\SHEETSPLAN\090201-XS.DWG PLOT DATE : 5/12/2020 7:56 AM PLOT BY : GUILLAMA, TINA PLOT NAME :

WISDOT/CADDS SHEET 49

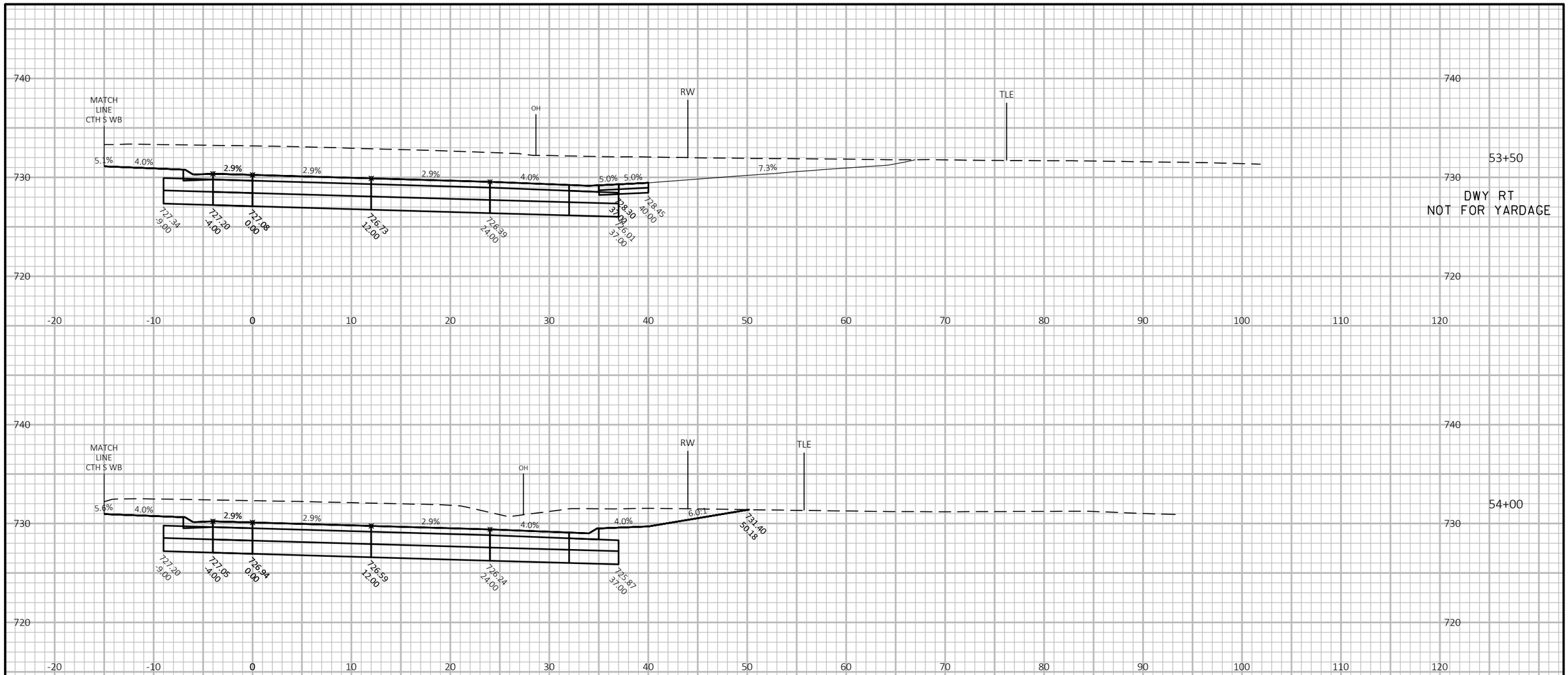

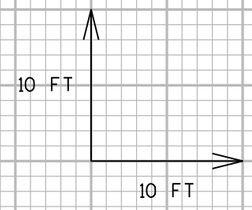

9

9

PROJECT ID: RD16-003	HWY: CTH S	COUNTY: KENOSHA	CROSS SECTIONS: CTH S EASTBOUND	SHEET 393	E

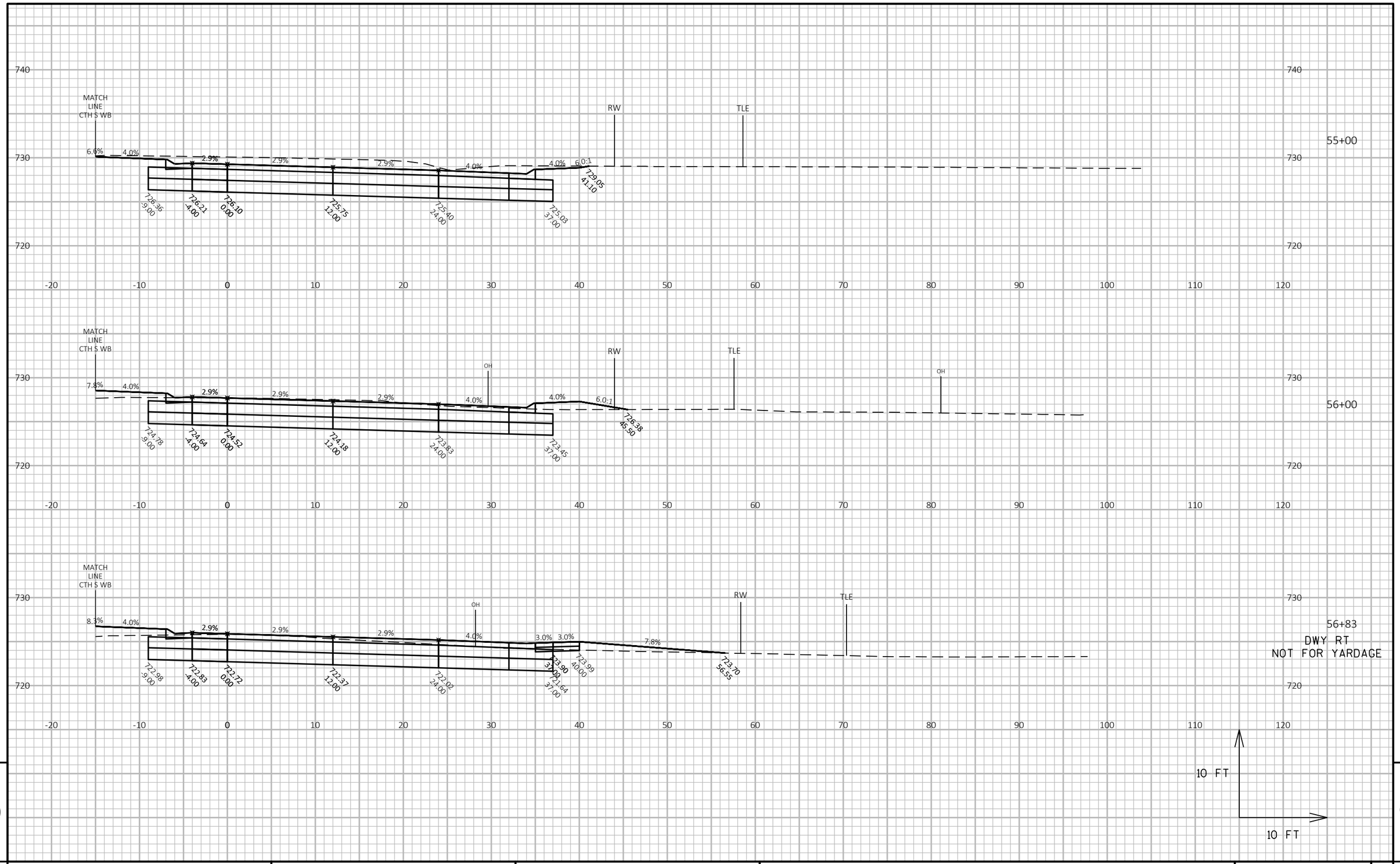

9

9

PROJECT ID: RD16-003	HWY: CTH S	COUNTY: KENOSHA	CROSS SECTIONS: CTH S EASTBOUND	SHEET 394	E

FILE NAME : T:\1165811\CIVIL3D\1165811\SHEETSPLAN\090201-XS.DWG PLOT DATE : 5/12/2020 7:57 AM PLOT BY : GUILLAMA, TINA PLOT NAME :

WISDOT/CADDS SHEET 49

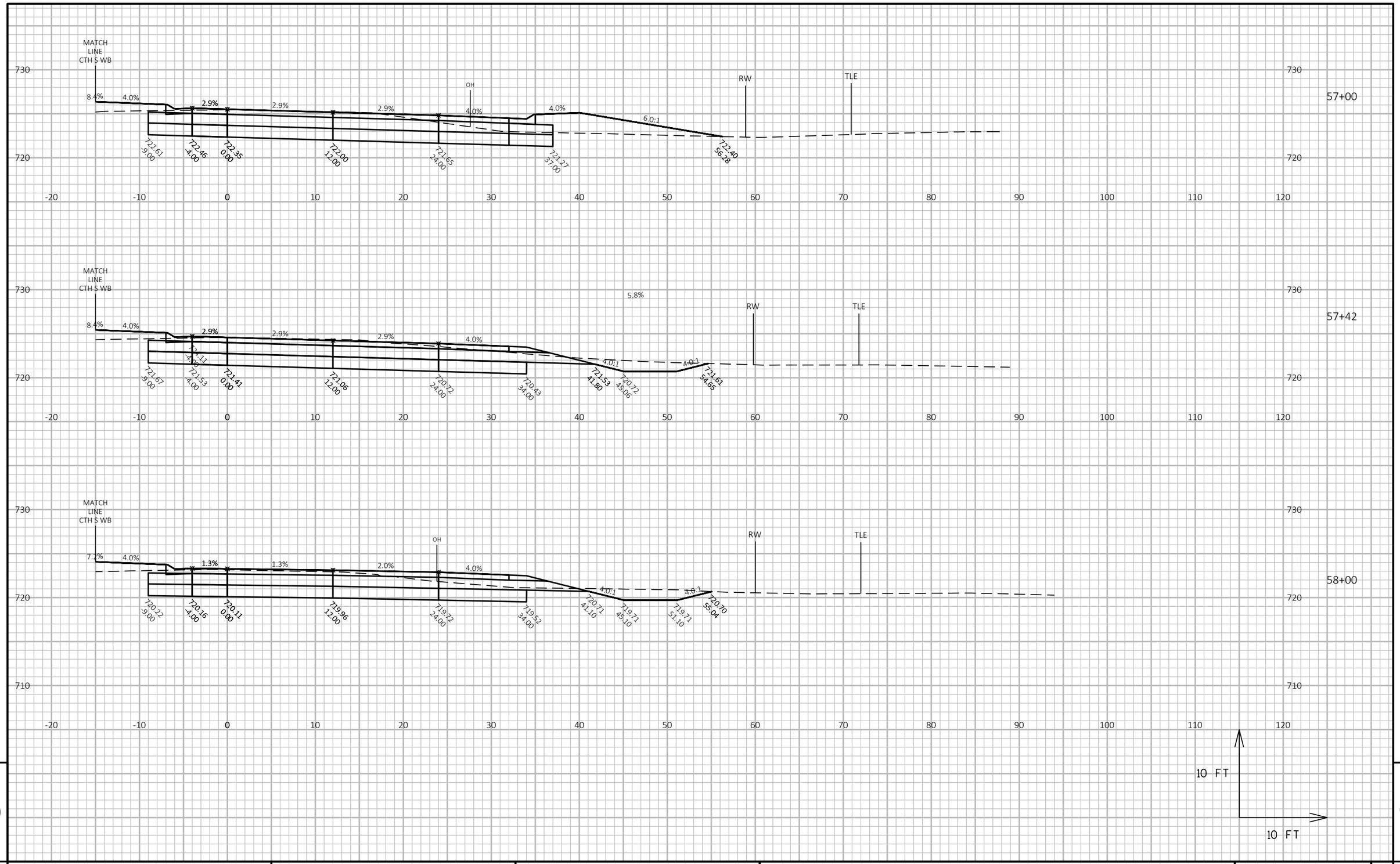

9

9

PROJECT ID: RD16-003	HWY: CTH S	COUNTY: KENOSHA	CROSS SECTIONS: CTH S EASTBOUND	SHEET 395	E

FILE NAME : T:\1165811\CIVIL3D\1165811\SHEETSPLAN\090201-XS.DWG PLOT DATE : 5/12/2020 7:57 AM PLOT BY : GUILLAMA, TINA PLOT NAME :

WISDOT/CADDS SHEET 49

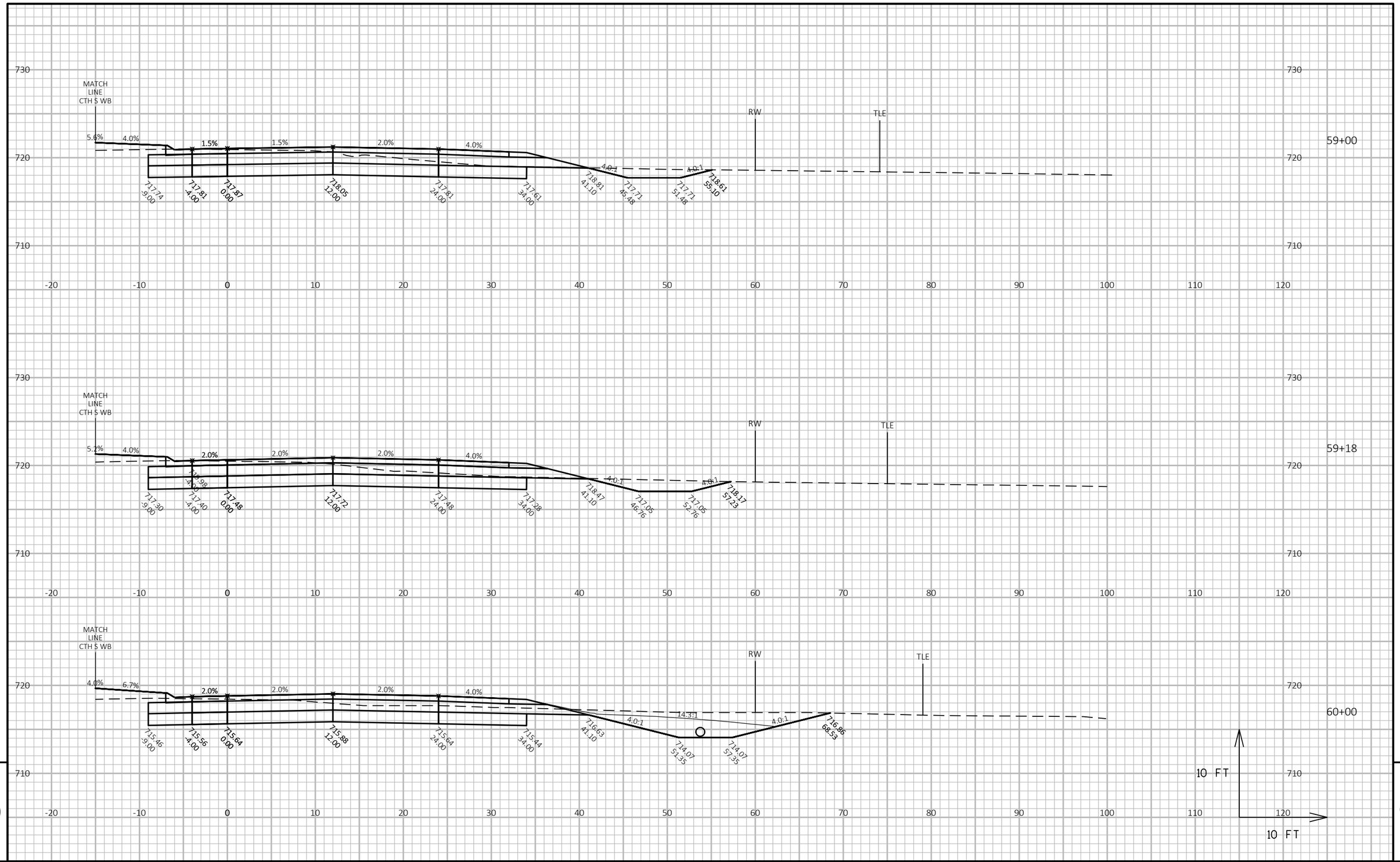

9

9

PROJECT ID: RD16-003	HWY: CTH S	COUNTY: KENOSHA	CROSS SECTIONS: CTH S EASTBOUND	SHEET 396	E

FILE NAME : T:\1165811\CIVIL3D\1165811\SHEETSPLAN\090201-XS.DWG PLOT DATE : 5/12/2020 7:57 AM PLOT BY : GUILLAMA, TINA PLOT NAME :

WISDOT/CADDS SHEET 49

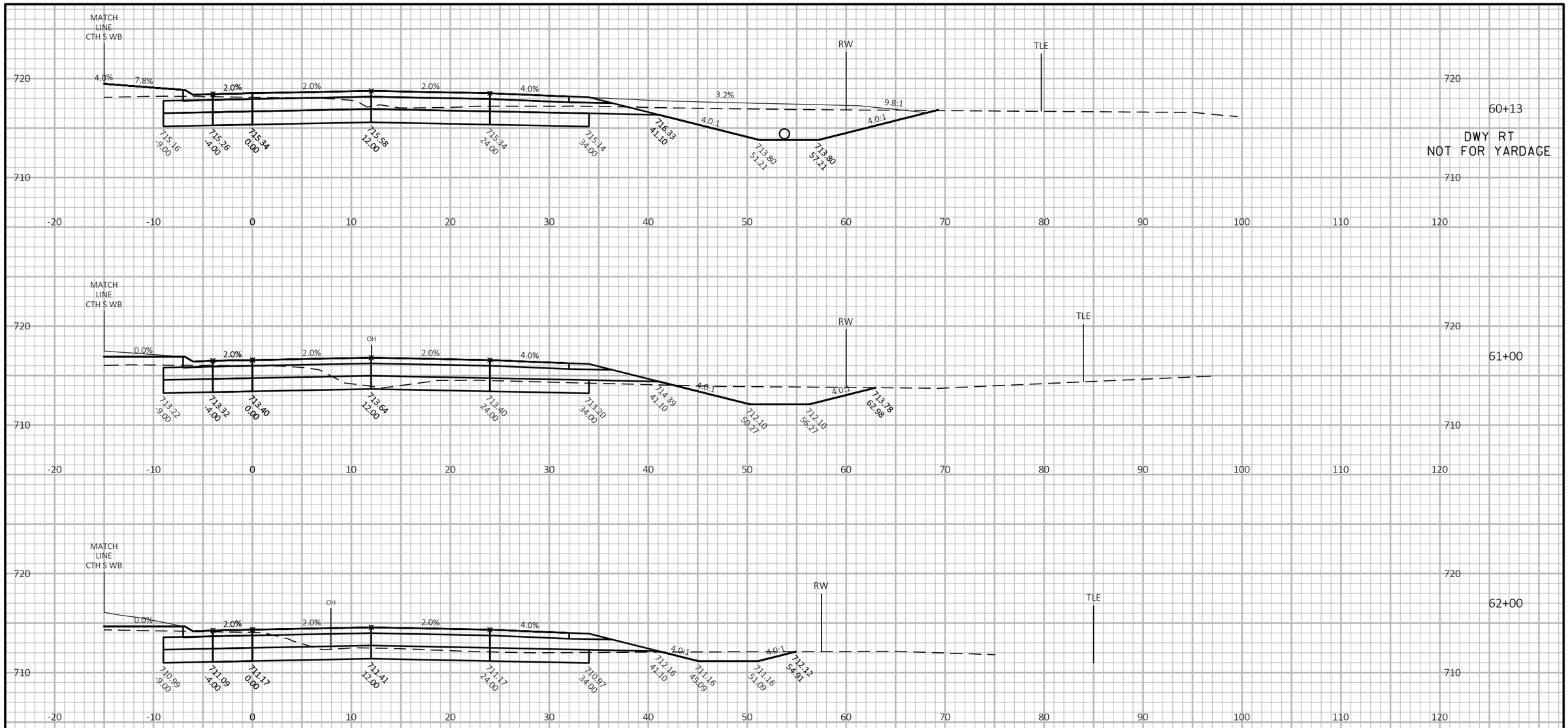

9

9

PROJECT ID: RD16-003	HWY: CTH S	COUNTY: KENOSHA	CROSS SECTIONS: CTH S EASTBOUND	SHEET 397	E

FILE NAME : T:\1165811\CIVIL3D\1165811\SHEETSPLAN\090201-XS.DWG PLOT DATE : 5/12/2020 7:57 AM PLOT BY : GUILLAMA, TINA PLOT NAME :

WISDOT/CADDS SHEET 49

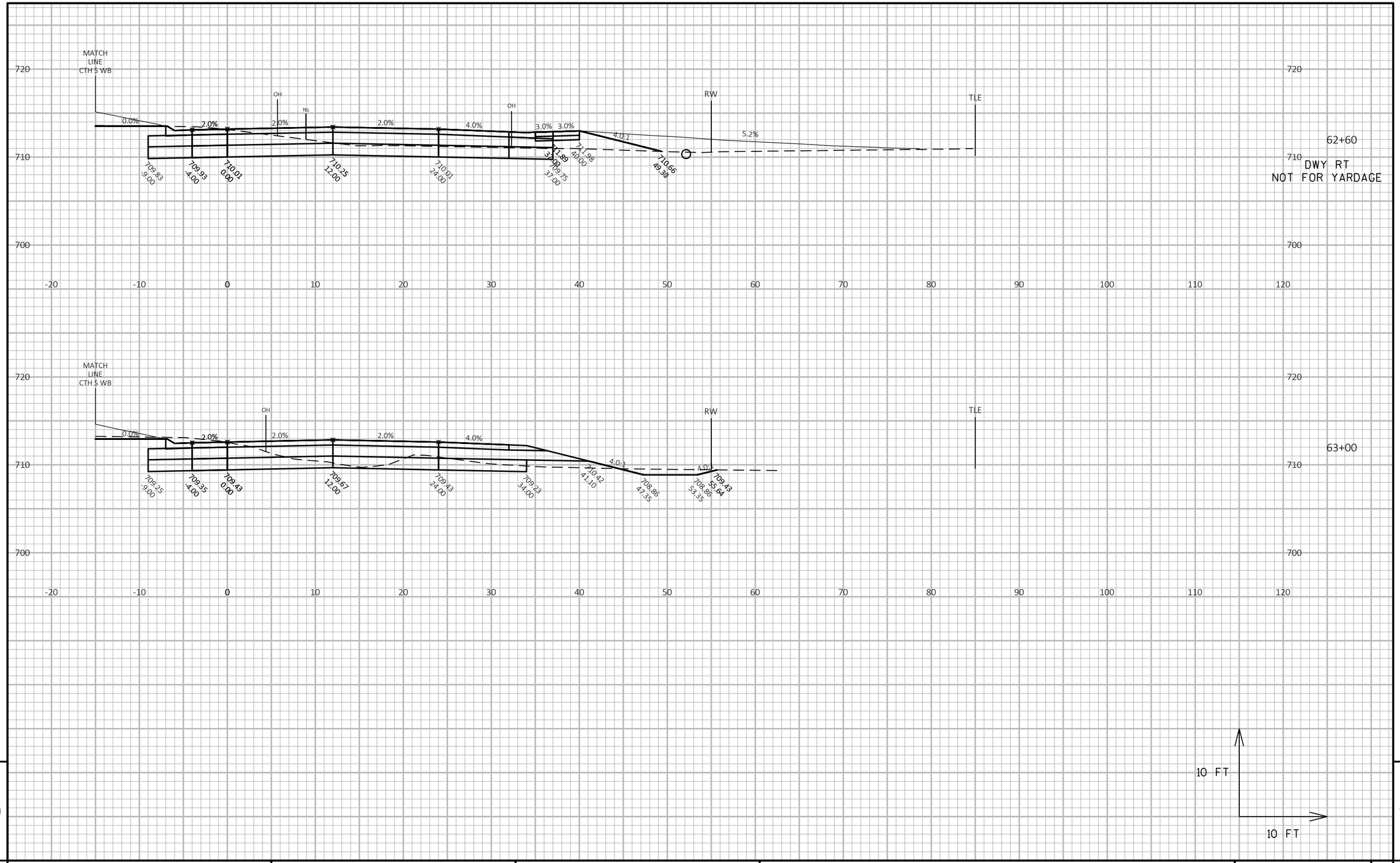

PROJECT ID: RD16-003	HWY: CTH S	COUNTY: KENOSHA	CROSS SECTIONS: CTH S EASTBOUND	SHEET 398	E

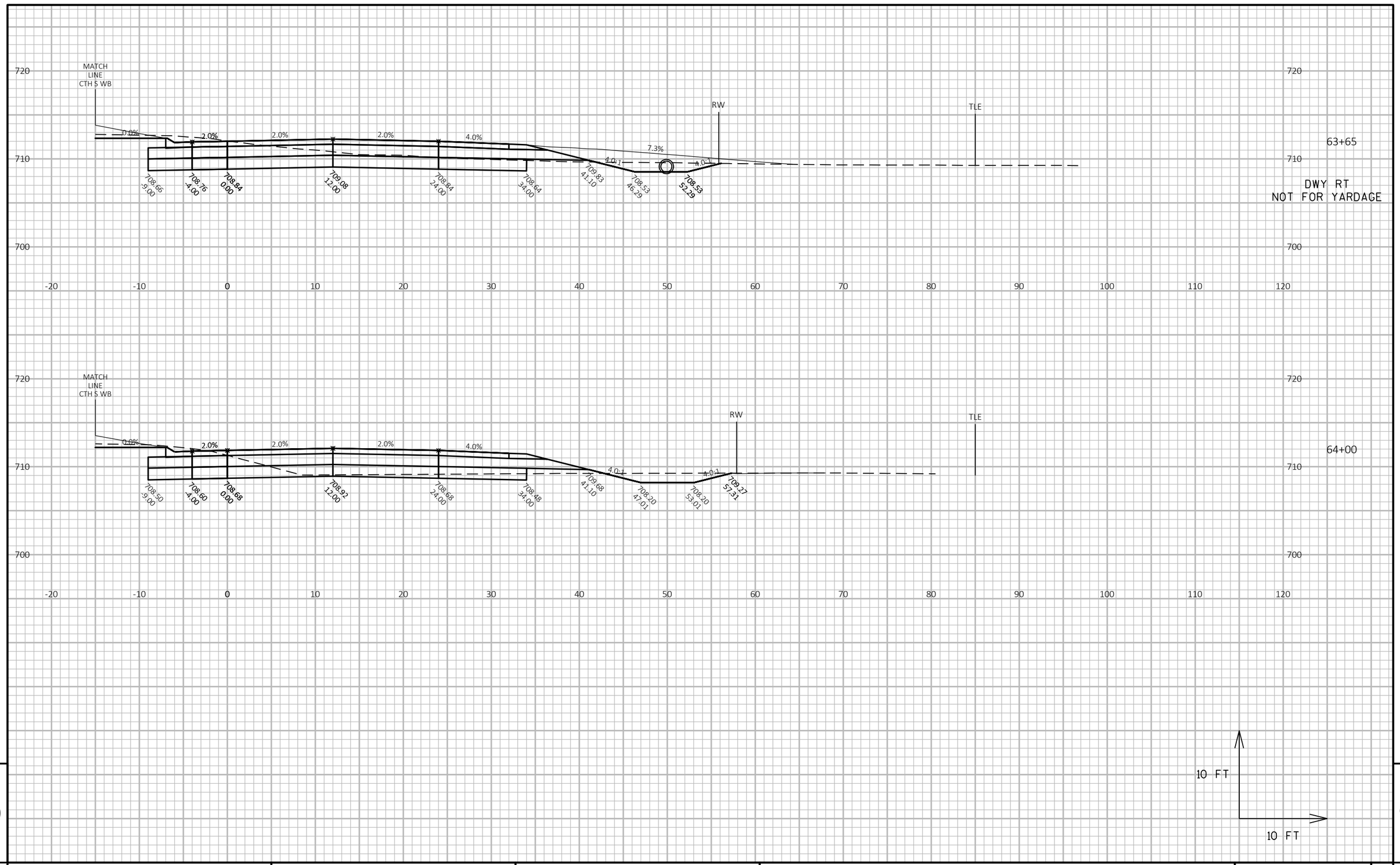

9

9

PROJECT ID: RD16-003	HWY: CTH S	COUNTY: KENOSHA	CROSS SECTIONS: CTH S EASTBOUND	SHEET 399	E

FILE NAME : T:\1165811\CIVIL3D\1165811\SHEETSPLAN\090201-XS.DWG PLOT DATE : 5/12/2020 7:58 AM PLOT BY : GUILLAMA, TINA PLOT NAME :

WISDOT/CADDS SHEET 49

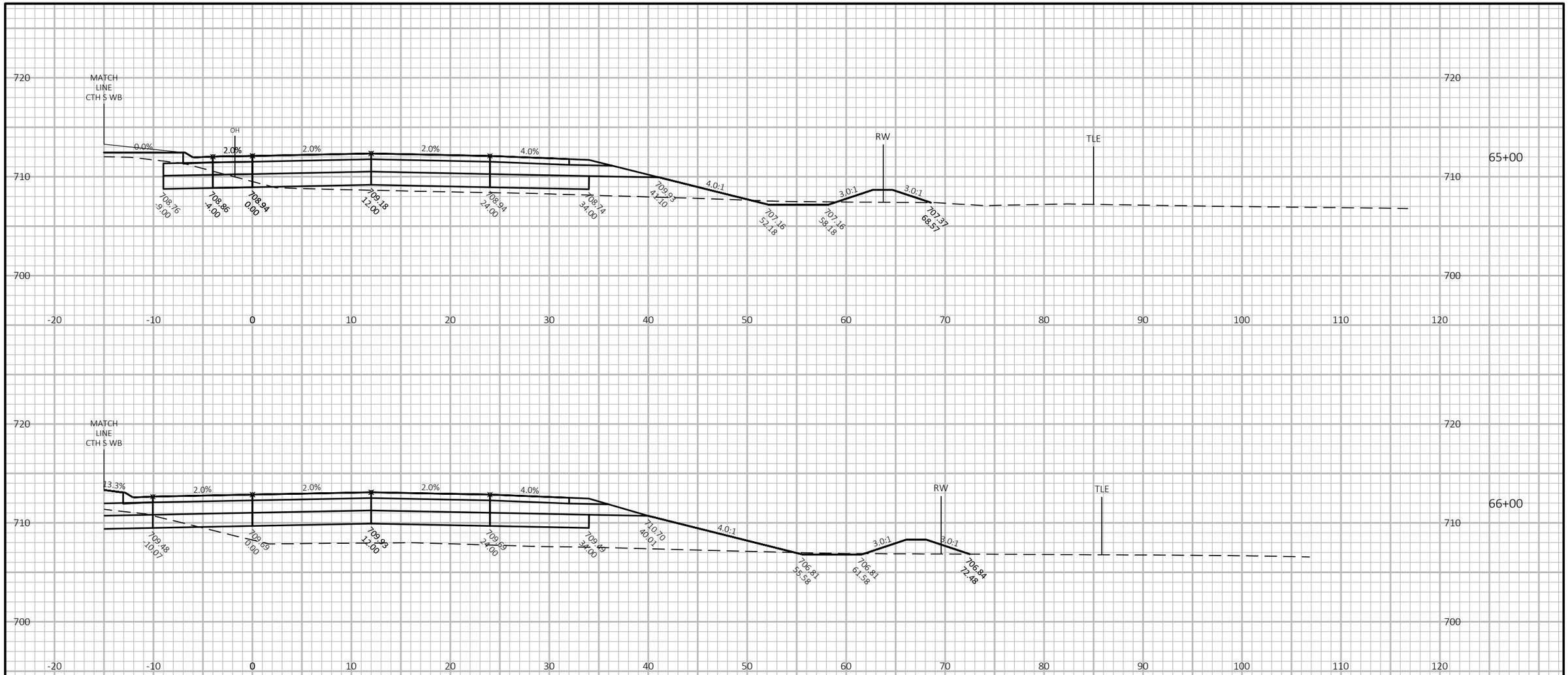

PROJECT ID: RD16-003	HWY: CTH S	COUNTY: KENOSHA	CROSS SECTIONS: CTH S EASTBOUND	SHEET 400	E

FILE NAME : T:\1165811\CIVIL3D\1165811\SHEETSPLAN\090201-XS.DWG PLOT DATE : 5/12/2020 7:58 AM PLOT BY : GUILLAMA, TINA PLOT NAME :

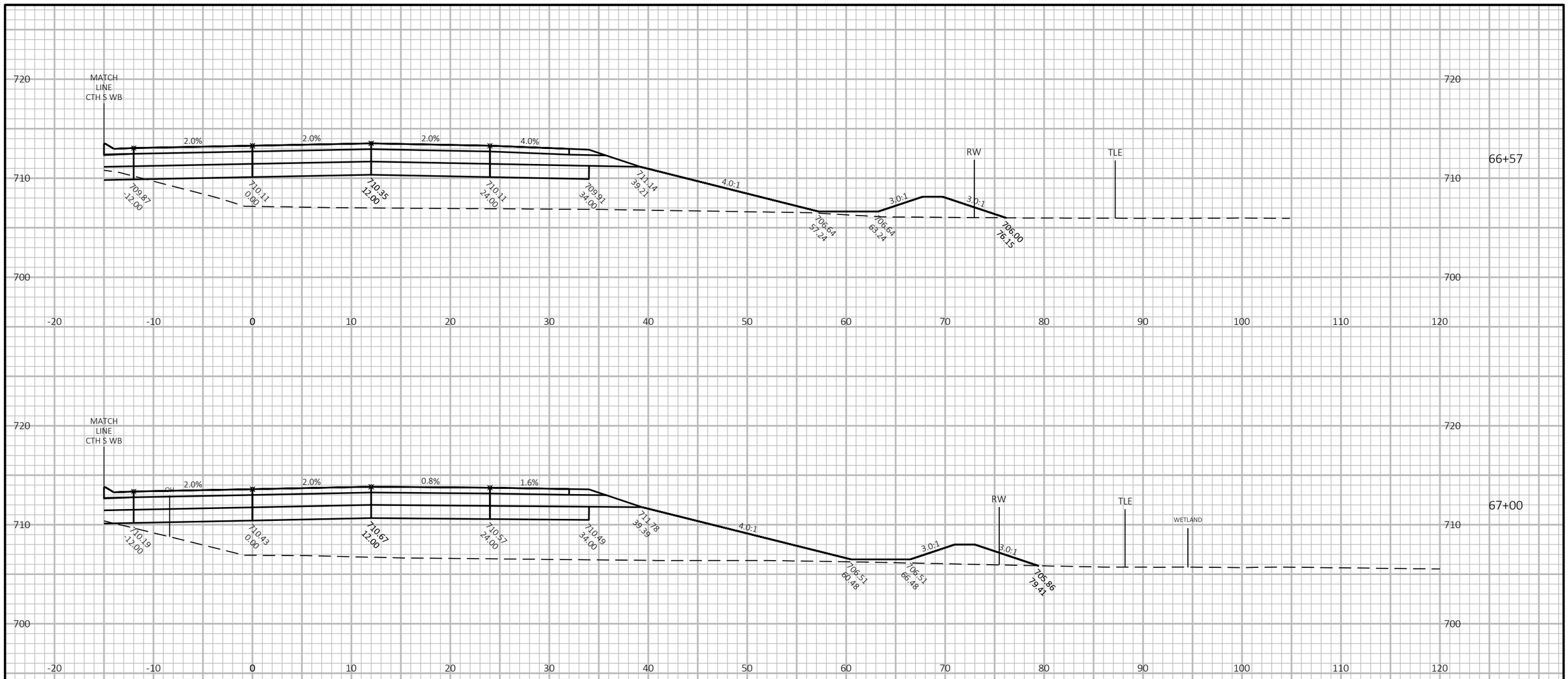

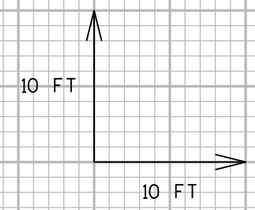

9

9

PROJECT ID: RD16-003	HWY: CTH S	COUNTY: KENOSHA	CROSS SECTIONS: CTH S EASTBOUND	SHEET 401	E

FILE NAME : T:\1165811\CIVIL3D\1165811\SHEETSPLAN\090201-XS.DWG PLOT DATE : 5/12/2020 7:58 AM PLOT BY : GUILLAMA, TINA PLOT NAME :

WISDOT/CADDS SHEET 49

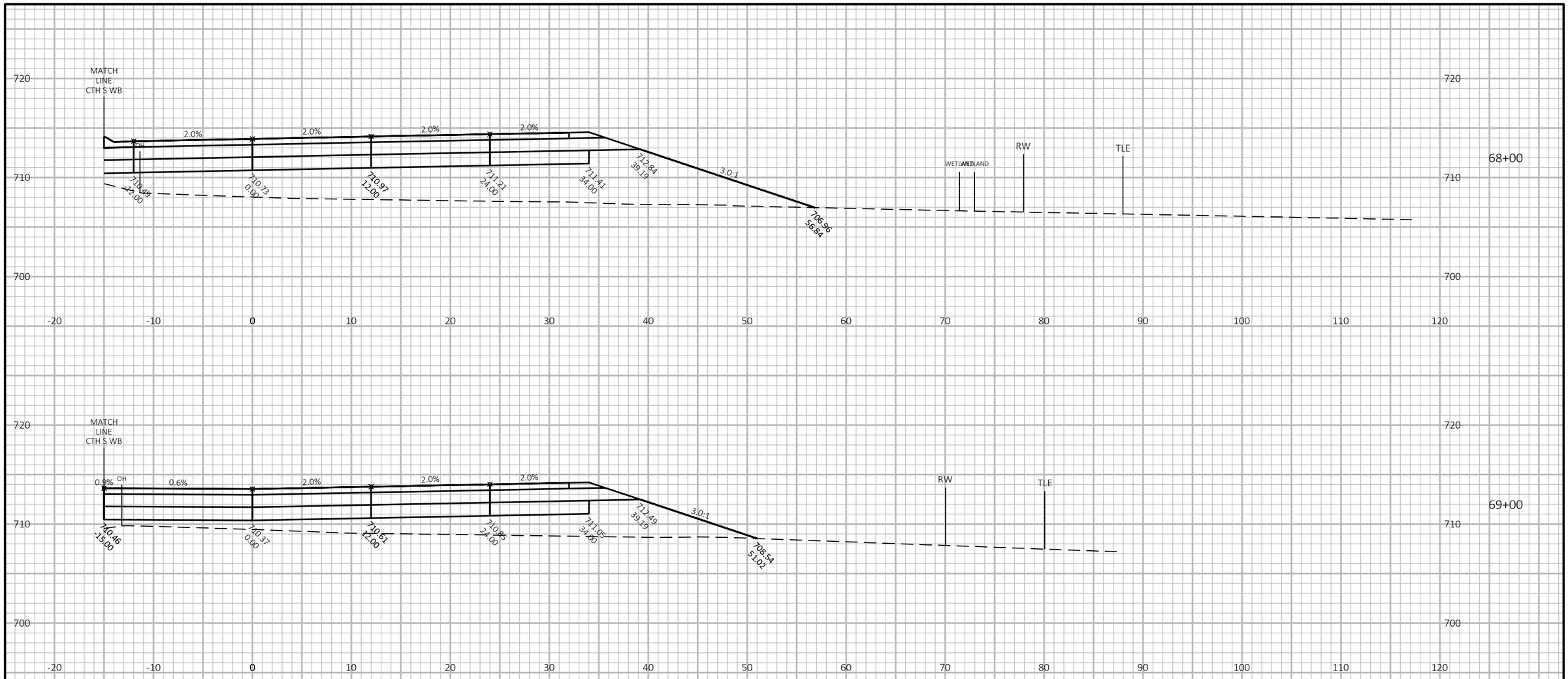

10 FT

10 FT

9

9

PROJECT ID: RD16-003	HWY: CTH S	COUNTY: KENOSHA	CROSS SECTIONS: CTH S EASTBOUND	SHEET 402	E

FILE NAME : T:\1165811\CIVIL3D\1165811\SHEETSPLAN\090201-XS.DWG PLOT DATE : 5/12/2020 7:58 AM PLOT BY : GUILLAMA, TINA PLOT NAME :

WISDOT/CADDS SHEET 49

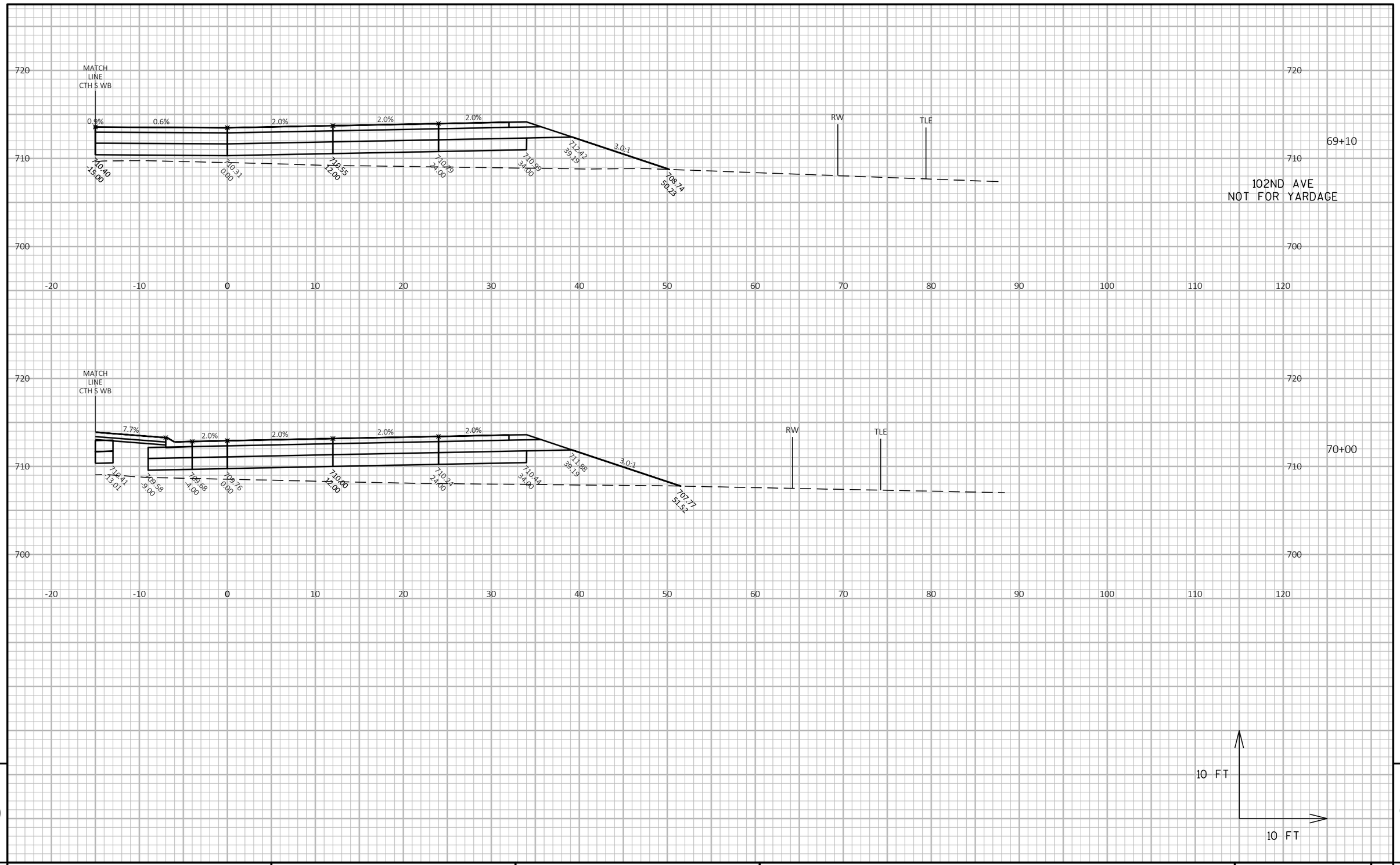

9

PROJECT ID: RD16-003	HWY: CTH S	COUNTY: KENOSHA	CROSS SECTIONS: CTH S EASTBOUND	SHEET 403	E

9

FILE NAME : T:\1165811\CIVIL3D\1165811\SHEETSPLAN\090201-XS.DWG PLOT DATE : 5/12/2020 7:58 AM PLOT BY : GUILLAMA, TINA PLOT NAME :

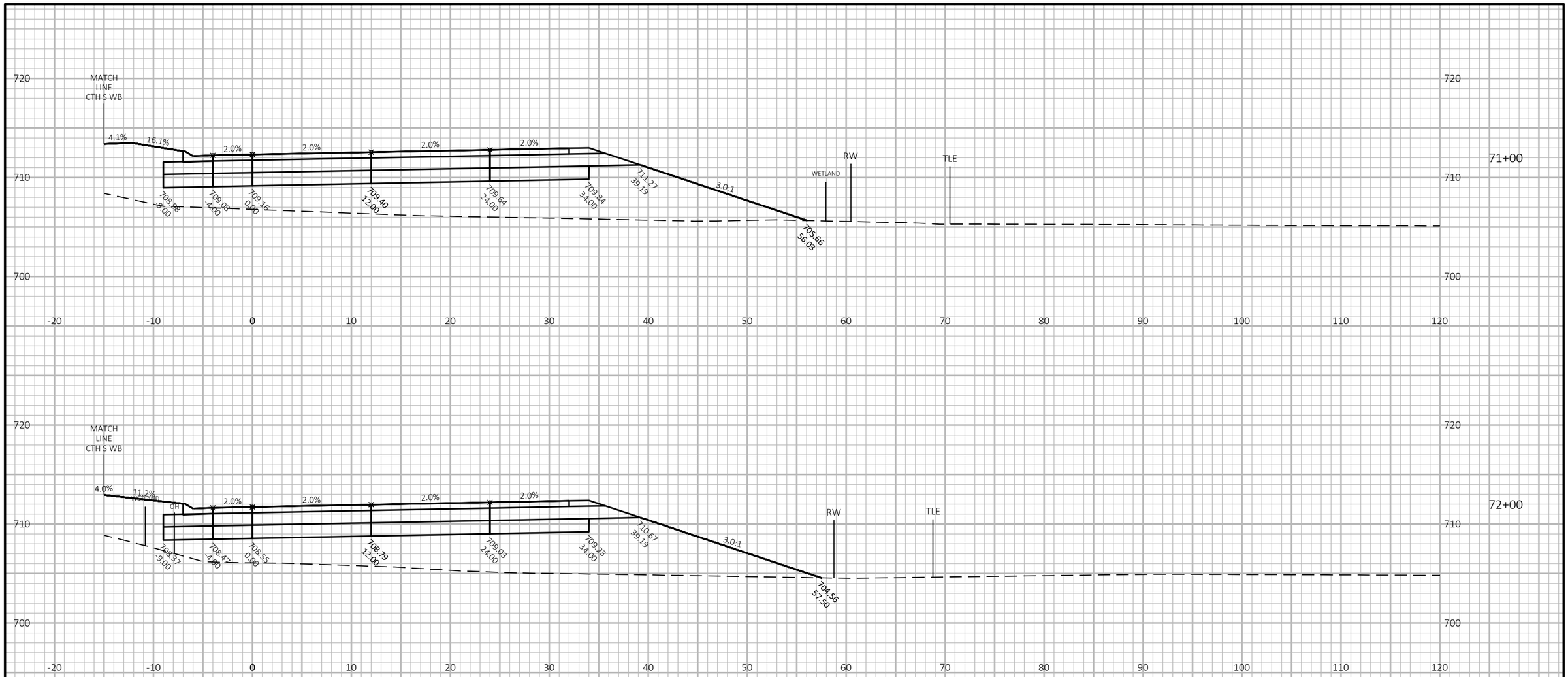

9

9

PROJECT ID: RD16-003	HWY: CTH S	COUNTY: KENOSHA	CROSS SECTIONS: CTH S EASTBOUND	SHEET 404	E

FILE NAME : T:\1165811\CIVIL3D\1165811\SHEETSPLAN\090201-XS.DWG PLOT DATE : 5/12/2020 7:58 AM PLOT BY : GUILLAMA, TINA PLOT NAME :

WISDOT/CADDS SHEET 49

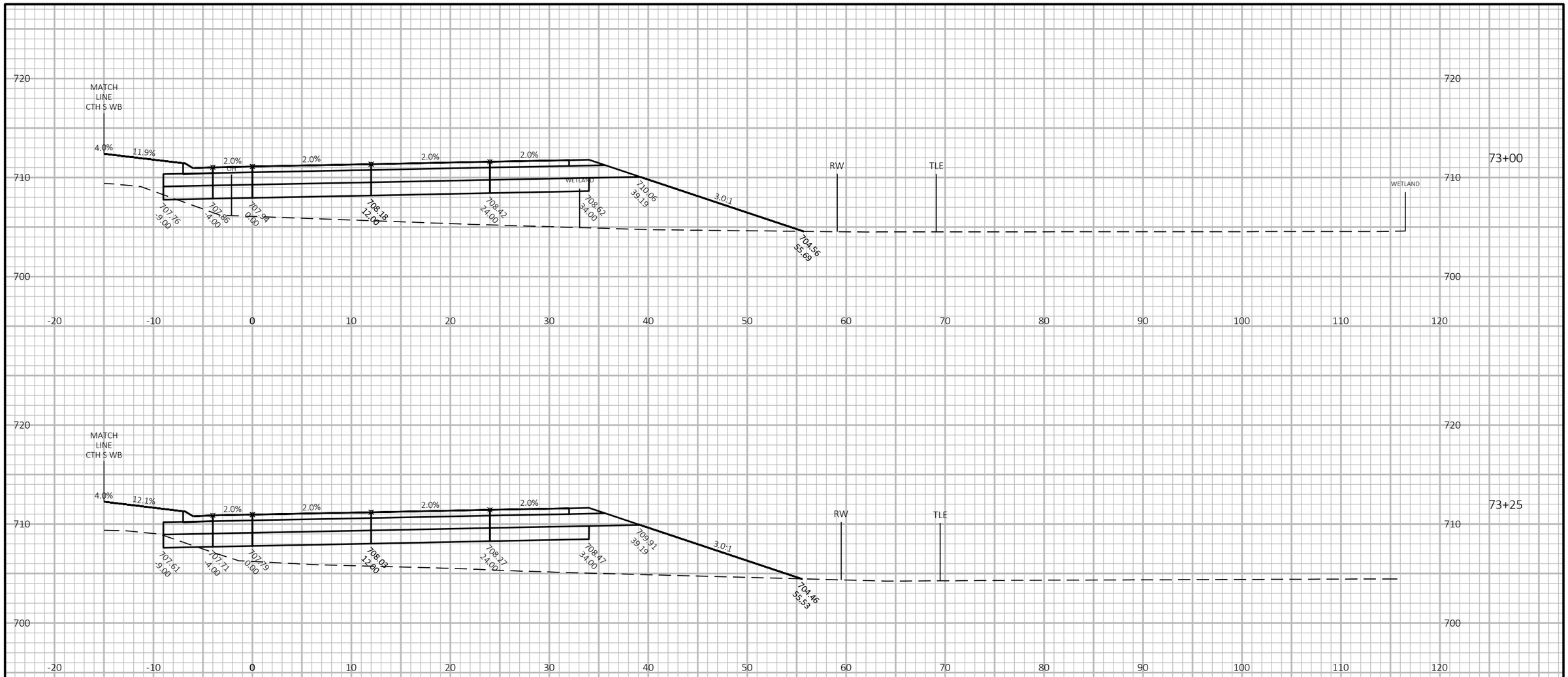

PROJECT ID: RD16-003	HWY: CTH S	COUNTY: KENOSHA	CROSS SECTIONS: CTH S EASTBOUND	SHEET 405	E

FILE NAME : T:\1165811\CIVIL3D\1165811\SHEETSPLAN\090201-XS.DWG PLOT DATE : 5/12/2020 7:59 AM PLOT BY : GUILLAMA, TINA PLOT NAME :
WISDOT/CADDS SHEET 49

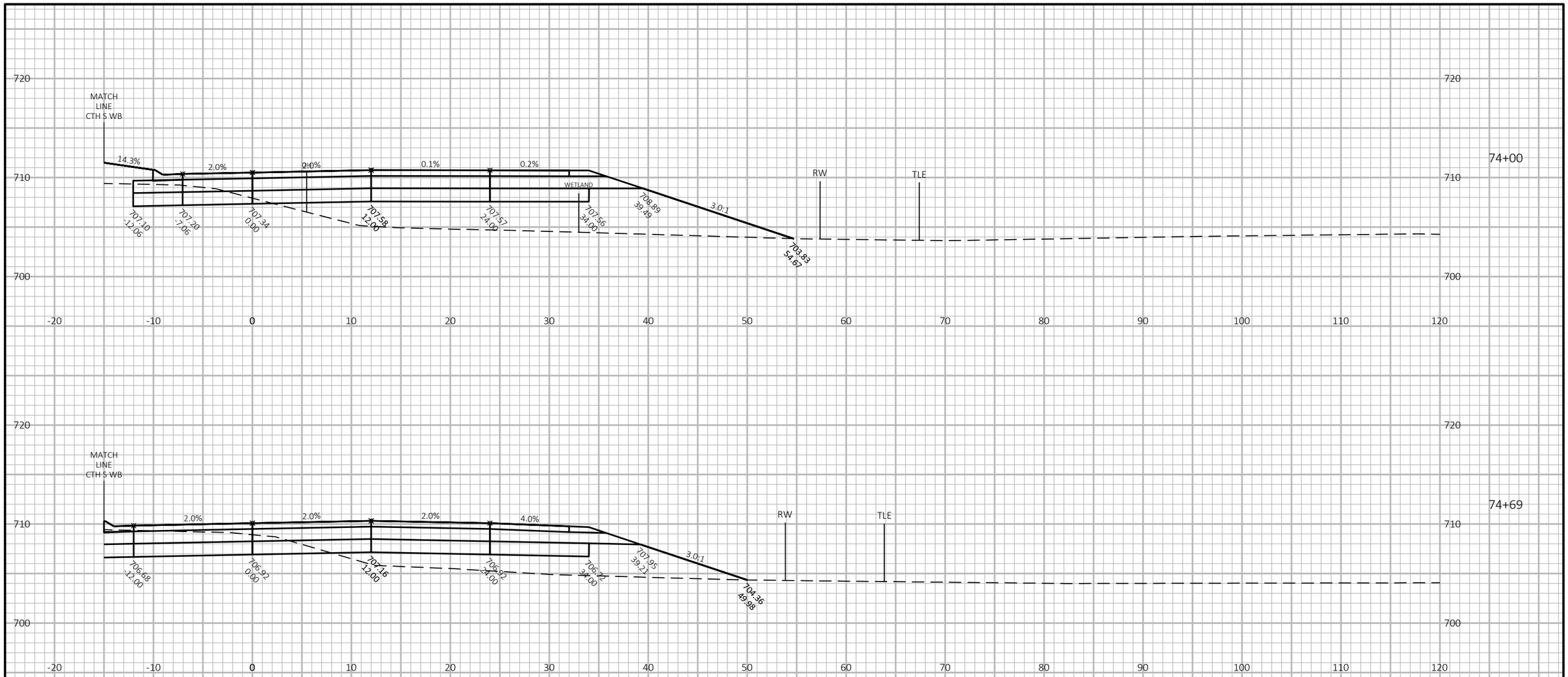

9

9

PROJECT ID: RD16-003	HWY: CTH S	COUNTY: KENOSHA	CROSS SECTIONS: CTH S EASTBOUND	SHEET 406	E

FILE NAME : T:\1165811\CIVIL3D\1165811\SHEETSPLAN\090201-XS.DWG PLOT DATE : 5/12/2020 7:59 AM PLOT BY : GUILLAMA, TINA PLOT NAME :

WISDOT/CADDS SHEET 49

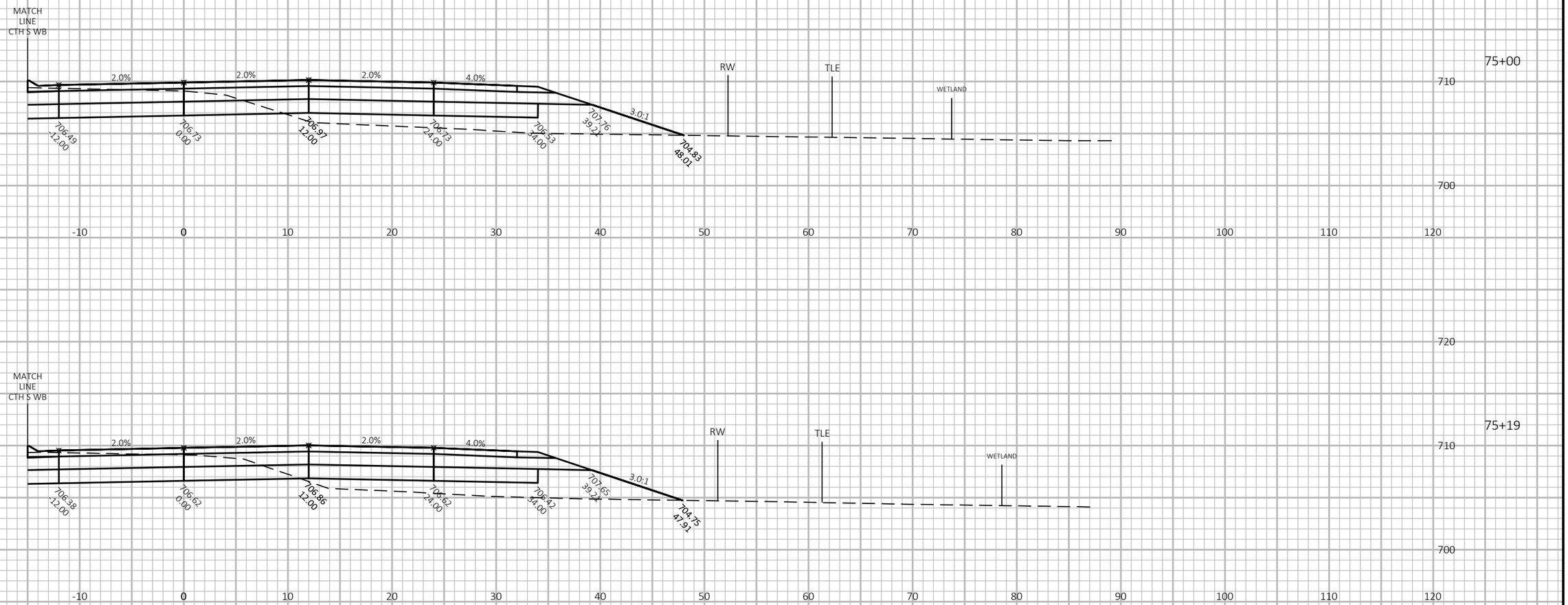

10 FT
10 FT

9

9

PROJECT ID: RD16-003	HWY: CTH S	COUNTY: KENOSHA	CROSS SECTIONS: CTH S EASTBOUND	SHEET 407	E

FILE NAME : T:\1165811\CIVIL3D\1165811\SHEETSPLAN\090201-XS.DWG PLOT DATE : 5/12/2020 7:59 AM PLOT BY : GUILLAMA, TINA PLOT NAME :

WISDOT/CADDS SHEET 49

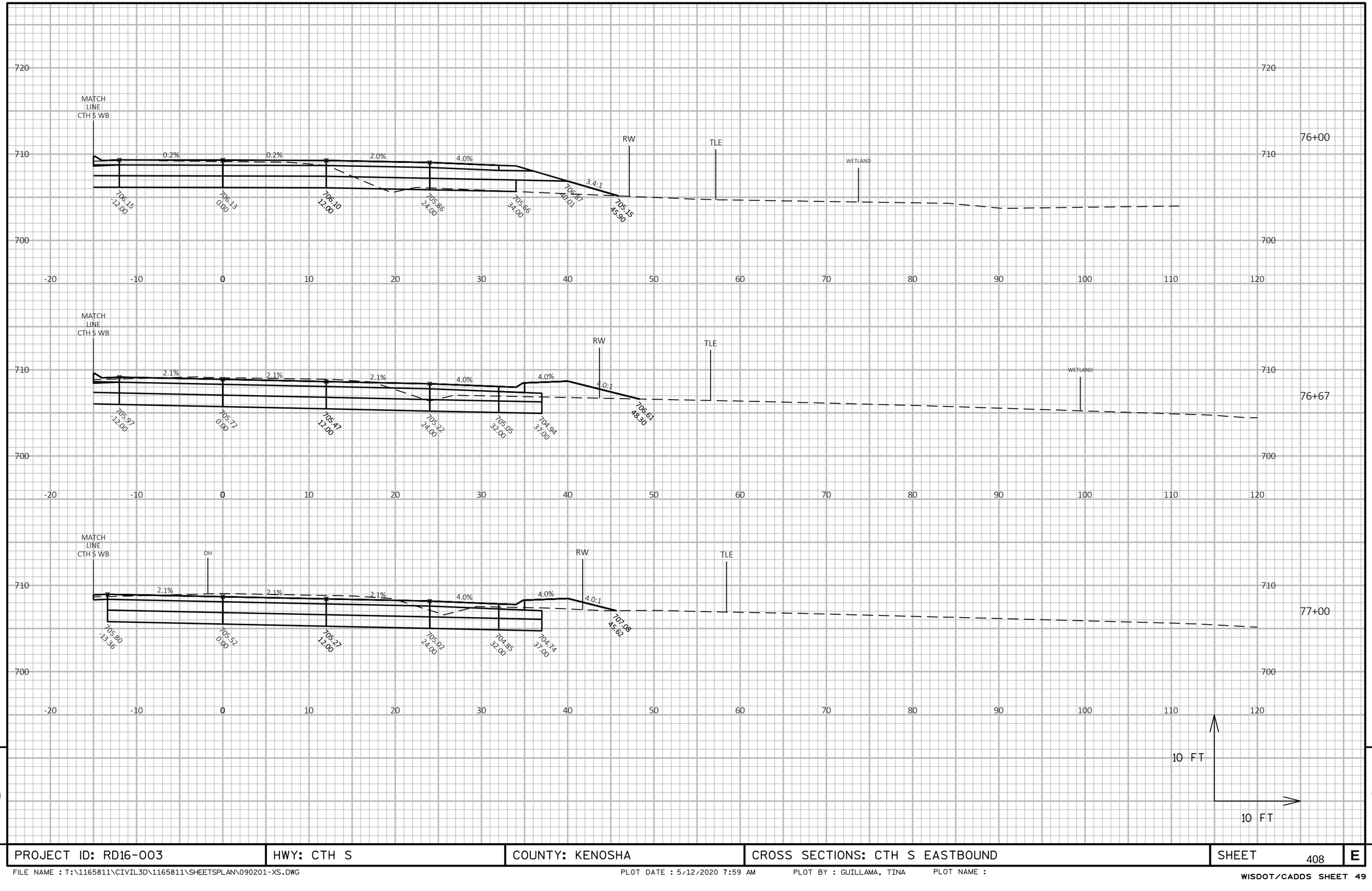

9

9

PROJECT ID: RD16-003	HWY: CTH S	COUNTY: KENOSHA	CROSS SECTIONS: CTH S EASTBOUND	SHEET 408	E

FILE NAME : T:\1165811\CIVIL3D\1165811\SHEETSPLAN\090201-XS.DWG PLOT DATE : 5/12/2020 7:59 AM PLOT BY : GUILLAMA, TINA PLOT NAME :

WISDOT/CADDS SHEET 49

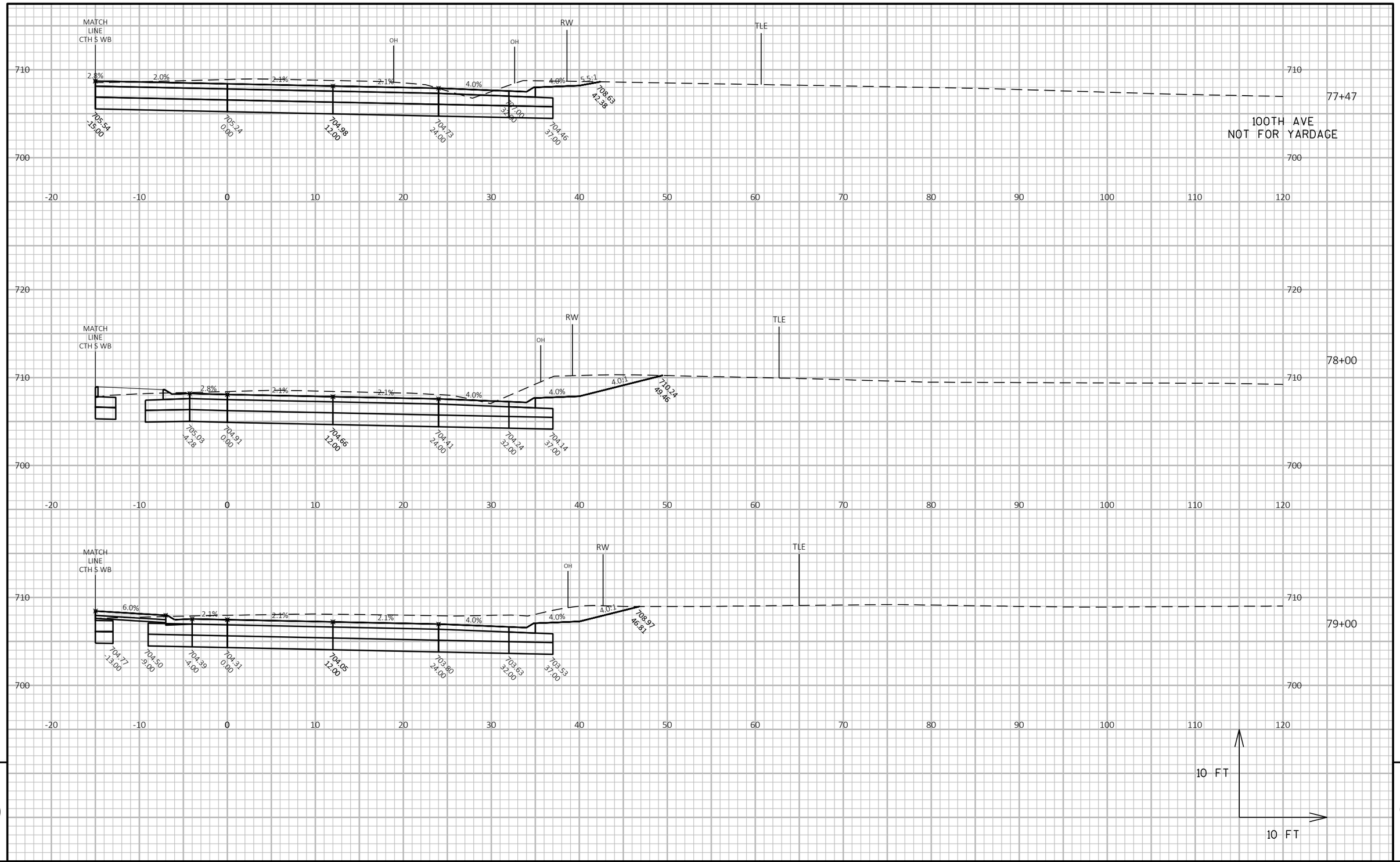

9

9

PROJECT ID: RD16-003	HWY: CTH S	COUNTY: KENOSHA	CROSS SECTIONS: CTH S EASTBOUND	SHEET 409	E

FILE NAME : T:\1165811\CIVIL3D\1165811\SHEETSPLAN\090201-XS.DWG PLOT DATE : 5/12/2020 7:59 AM PLOT BY : GUILLAMA, TINA PLOT NAME :

WISDOT/CADDS SHEET 49

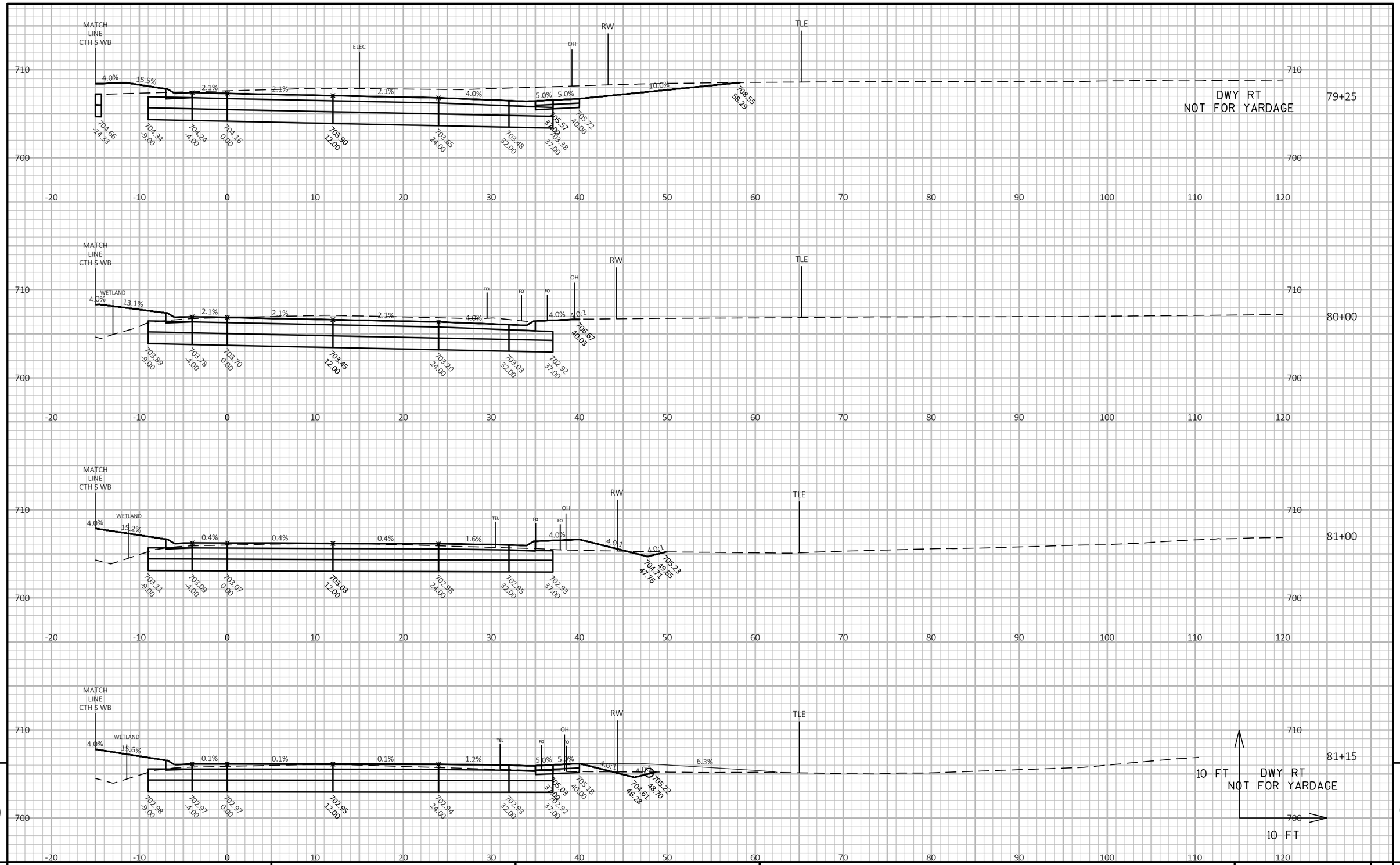

9

9

PROJECT ID: RD16-003	HWY: CTH S	COUNTY: KENOSHA	CROSS SECTIONS: CTH S EASTBOUND	SHEET 410	E

FILE NAME : T:\1165811\CIVIL3D\1165811\SHEETSPLAN\090201-XS.DWG PLOT DATE : 5/12/2020 8:00 AM PLOT BY : GUILLAMA, TINA PLOT NAME :

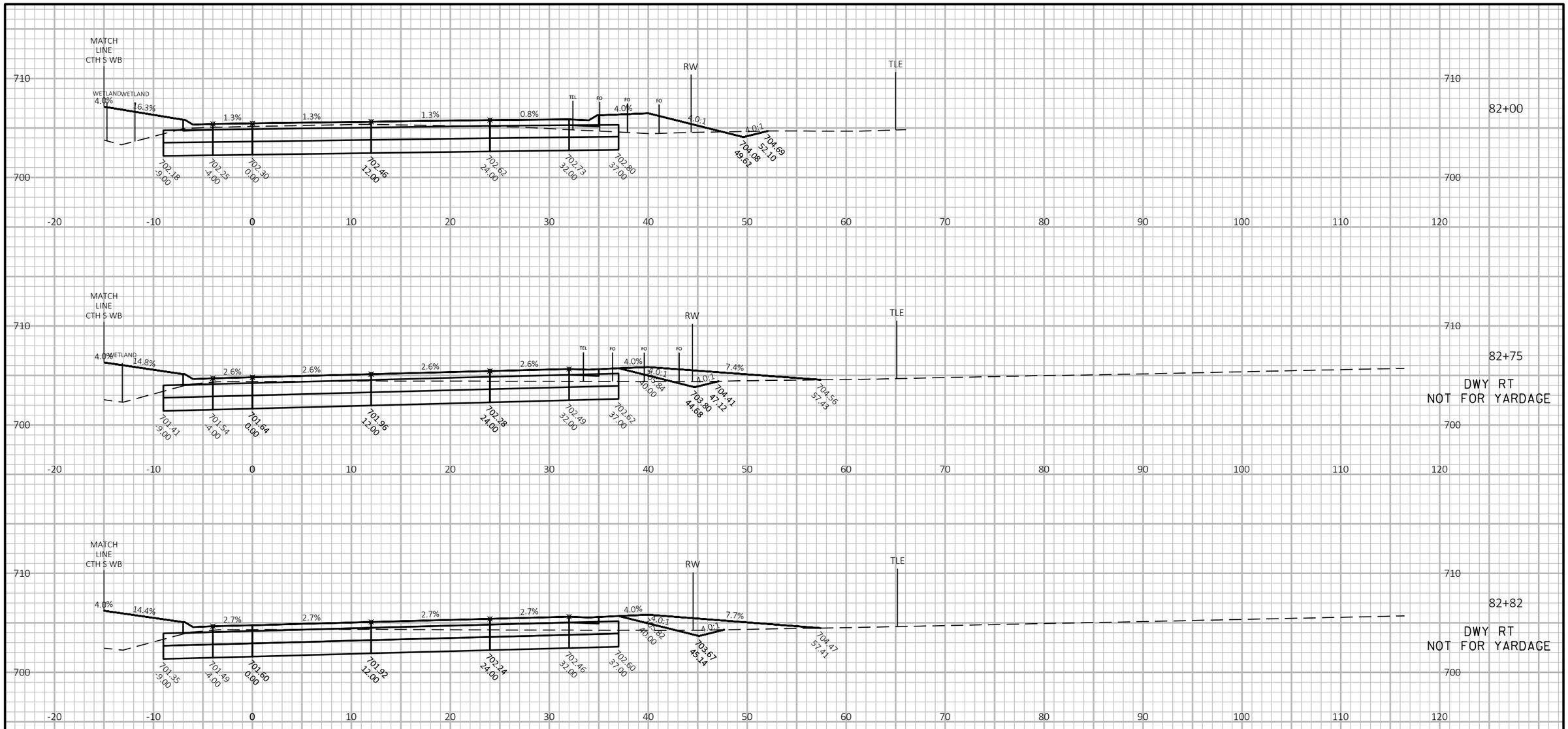

9

9

PROJECT ID: RD16-003	HWY: CTH S	COUNTY: KENOSHA	CROSS SECTIONS: CTH S EASTBOUND	SHEET 411	E

FILE NAME : T:\1165811\CIVIL3D\1165811\SHEETSPLAN\090201-XS.DWG PLOT DATE : 5/12/2020 8:00 AM PLOT BY : GUILLAMA, TINA PLOT NAME :

WISDOT/CADDS SHEET 49

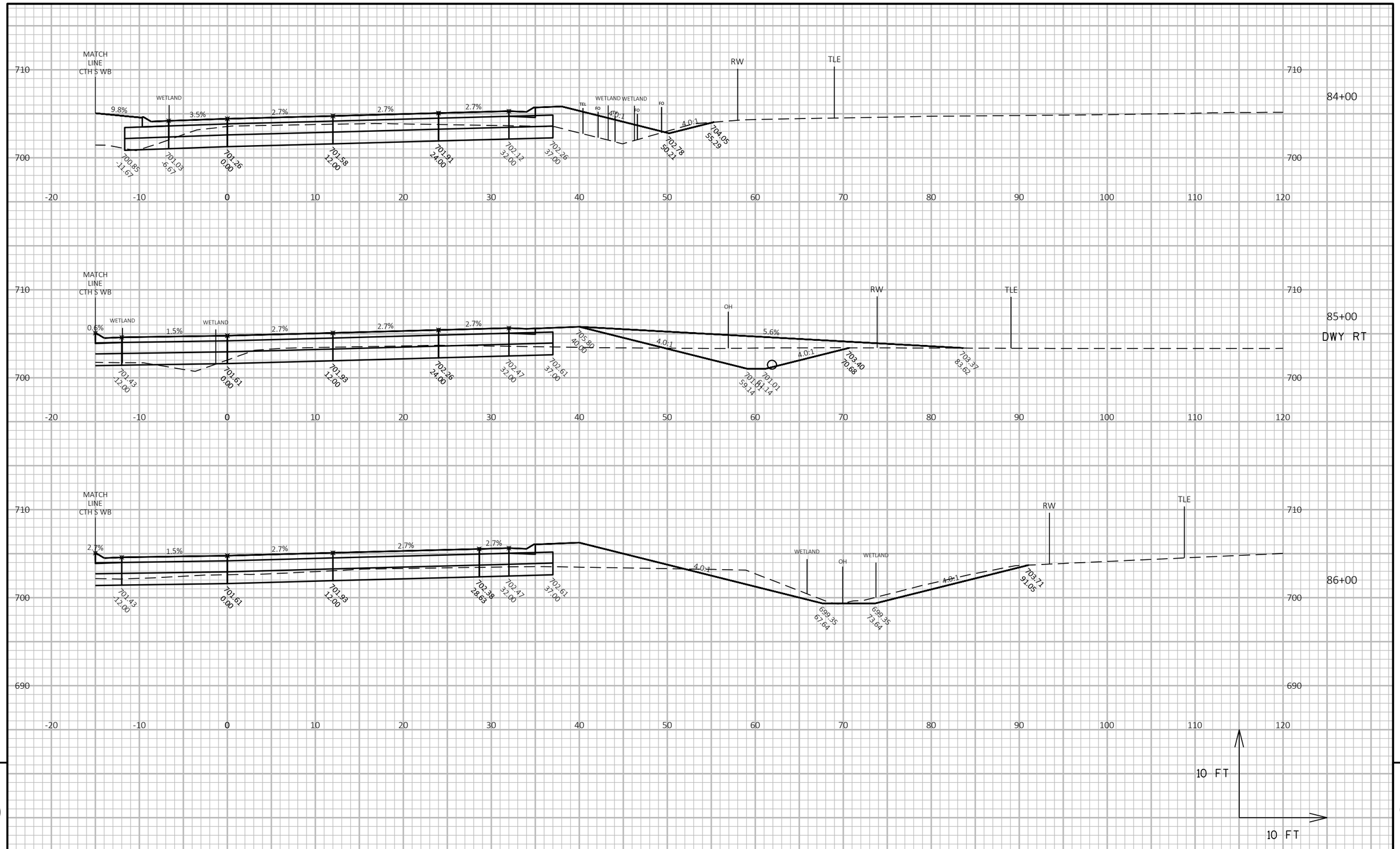

PROJECT ID: RD16-003	HWY: CTH S	COUNTY: KENOSHA	CROSS SECTIONS: CTH S EASTBOUND	SHEET 412	E

FILE NAME : T:\1165811\CIVIL3D\1165811\SHEETSPLAN\090201-XS.DWG PLOT DATE : 5/12/2020 8:00 AM PLOT BY : GUILLAMA, TINA PLOT NAME :

WISDOT/CADDS SHEET 49

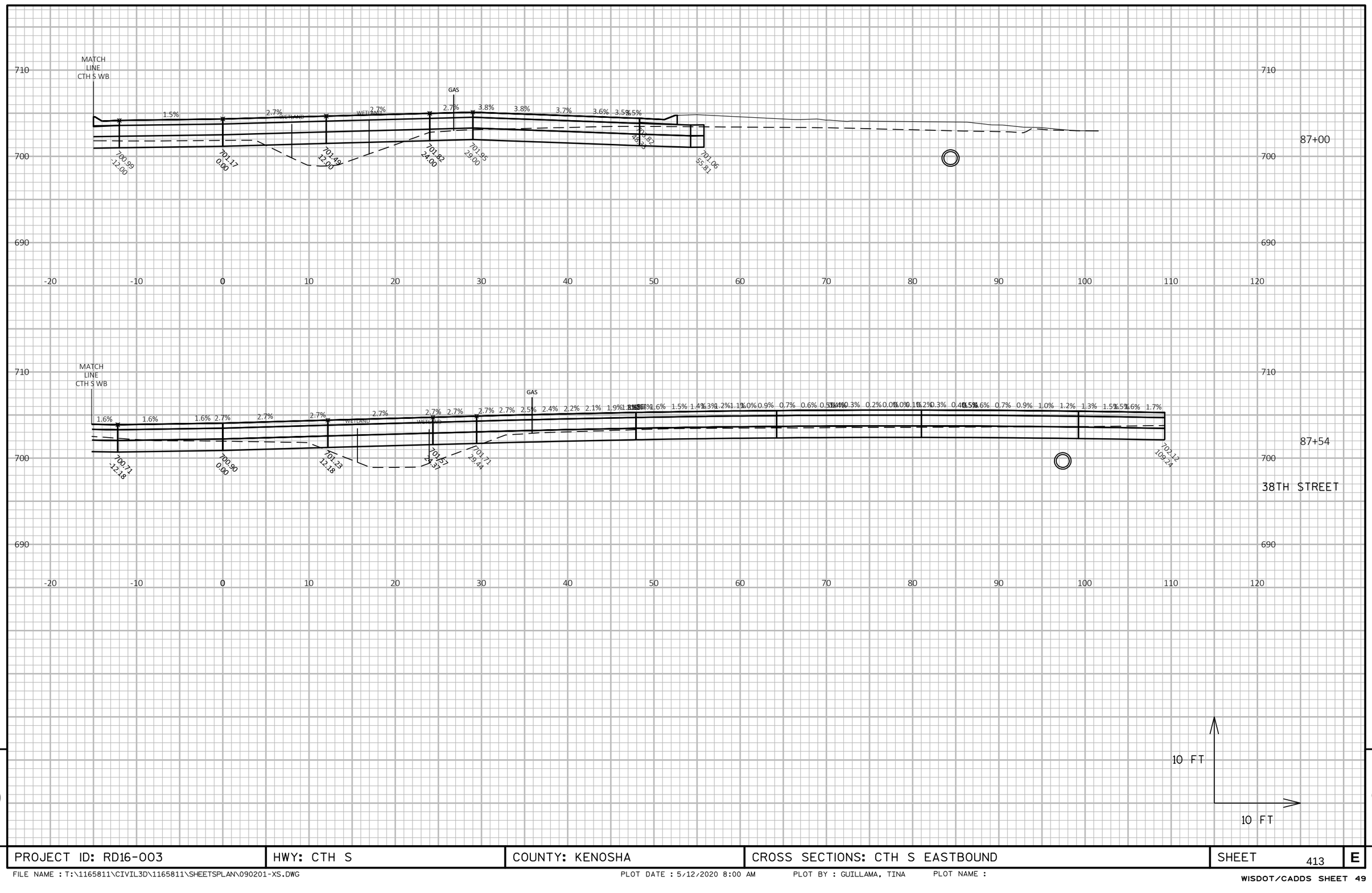

9

9

PROJECT ID: RD16-003	HWY: CTH S	COUNTY: KENOSHA	CROSS SECTIONS: CTH S EASTBOUND	SHEET 413	E

FILE NAME : T:\1165811\CIVIL3D\1165811\SHEETSPLAN\090201-XS.DWG PLOT DATE : 5/12/2020 8:00 AM PLOT BY : GUILLAMA, TINA PLOT NAME :

WISDOT/CADDS SHEET 49

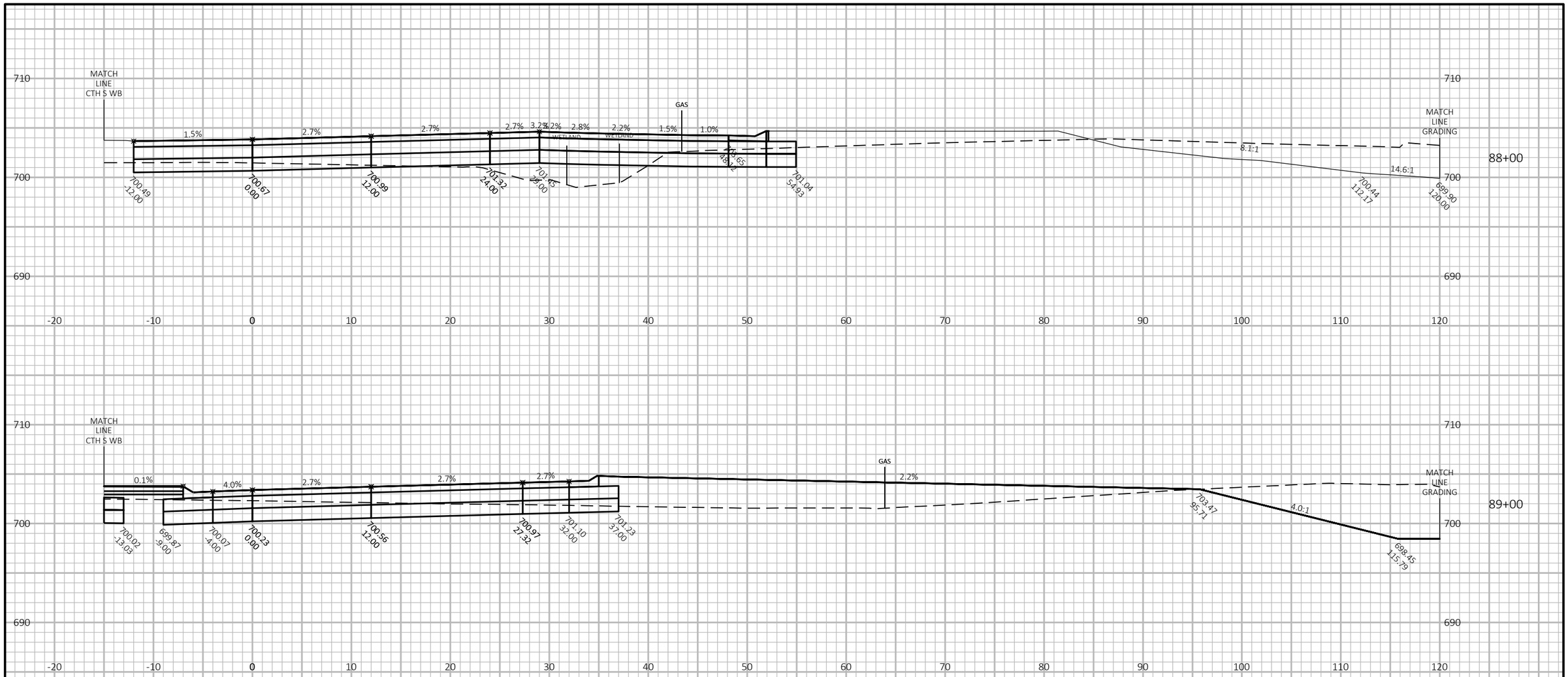

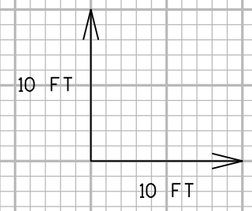

9

9

PROJECT ID: RD16-003	HWY: CTH S	COUNTY: KENOSHA	CROSS SECTIONS: CTH S EASTBOUND	SHEET 414	E

FILE NAME : T:\1165811\CIVIL3D\1165811\SHEETSPLAN\090201-XS.DWG PLOT DATE : 5/12/2020 8:00 AM PLOT BY : GUILLAMA, TINA PLOT NAME :

WISDOT/CADDS SHEET 49

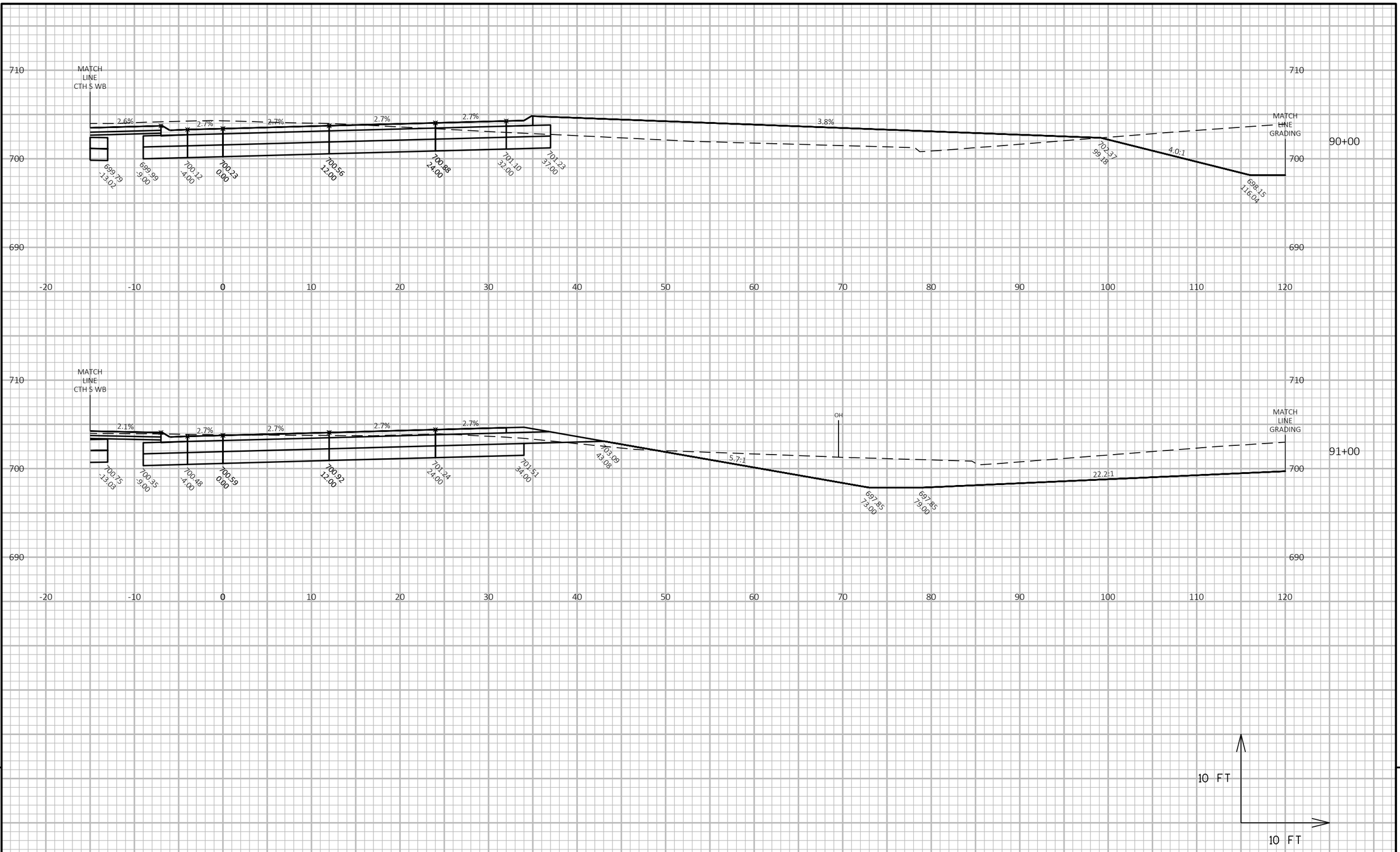

9

9

PROJECT ID: RD16-003	HWY: CTH S	COUNTY: KENOSHA	CROSS SECTIONS: CTH S EASTBOUND	SHEET 415	E

FILE NAME : T:\1165811\CIVIL3D\1165811\SHEETSPLAN\090201-XS.DWG PLOT DATE : 5/12/2020 8:00 AM PLOT BY : GUILLAMA, TINA PLOT NAME :

WISDOT/CADDS SHEET 49

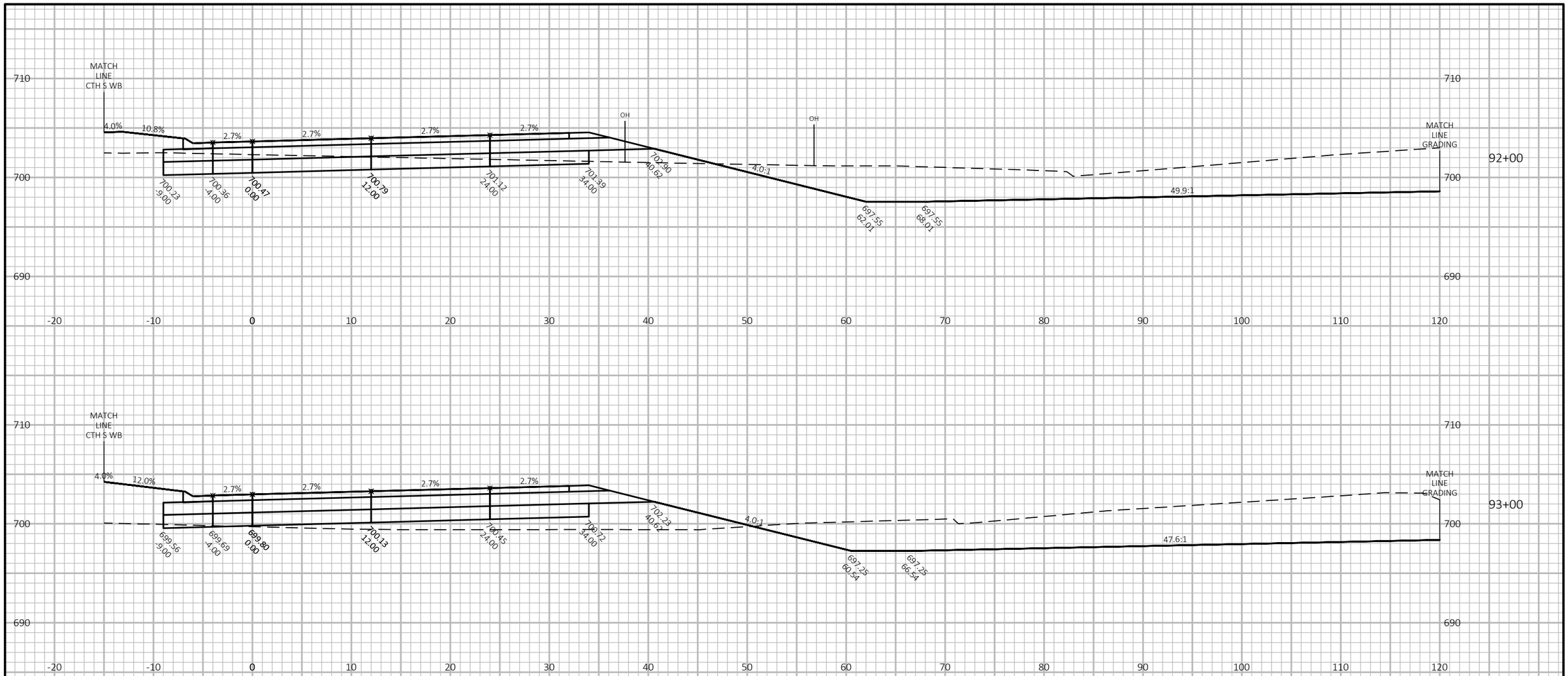

9

9

PROJECT ID: RD16-003	HWY: CTH S	COUNTY: KENOSHA	CROSS SECTIONS: CTH S EASTBOUND	SHEET 416	E

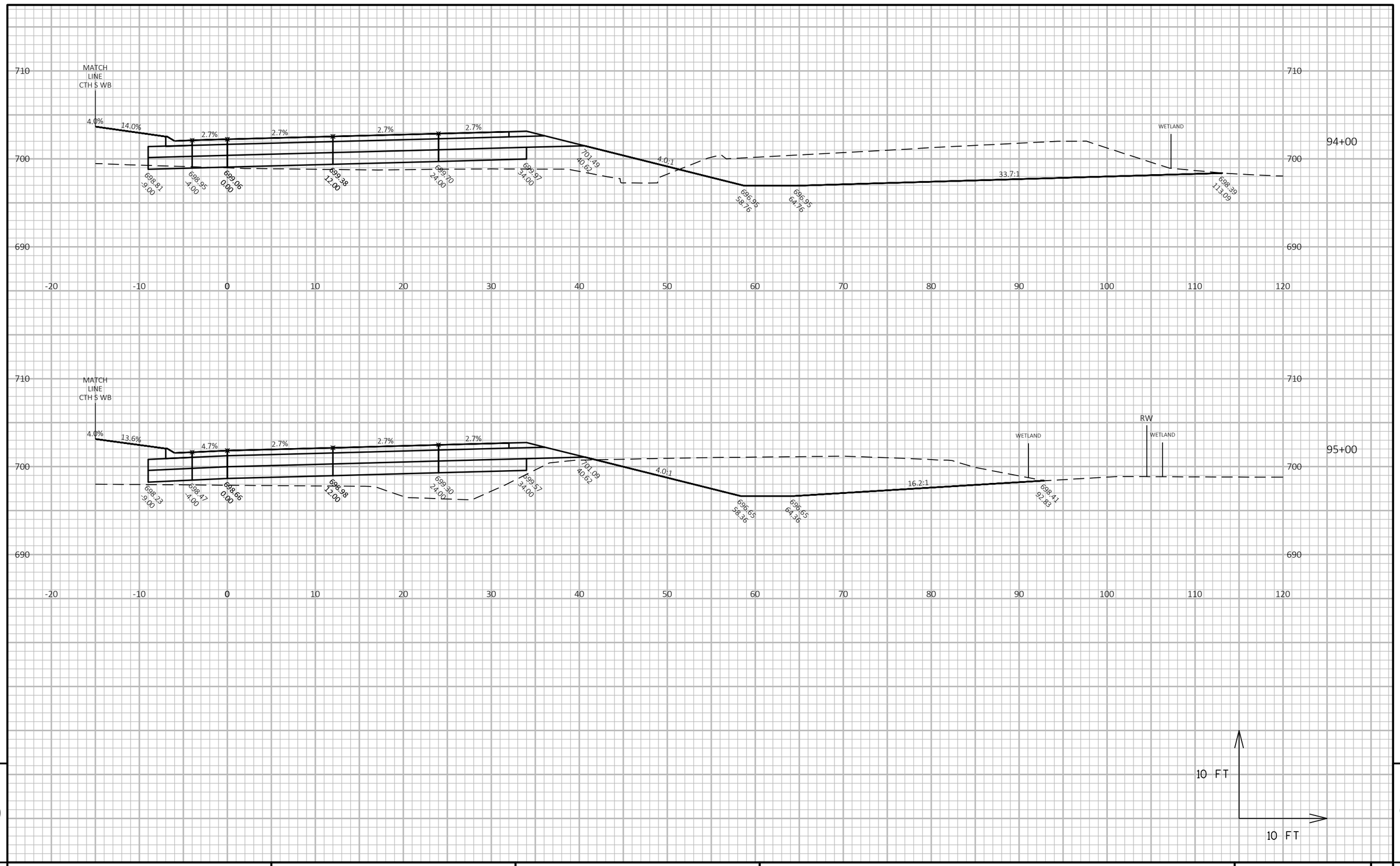

9

9

PROJECT ID: RD16-003	HWY: CTH S	COUNTY: KENOSHA	CROSS SECTIONS: CTH S EASTBOUND	SHEET 417	E

FILE NAME : T:\1165811\CIVIL3D\1165811\SHEETSPLAN\090201-XS.DWG PLOT DATE : 5/12/2020 8:01 AM PLOT BY : GUILLAMA, TINA PLOT NAME :

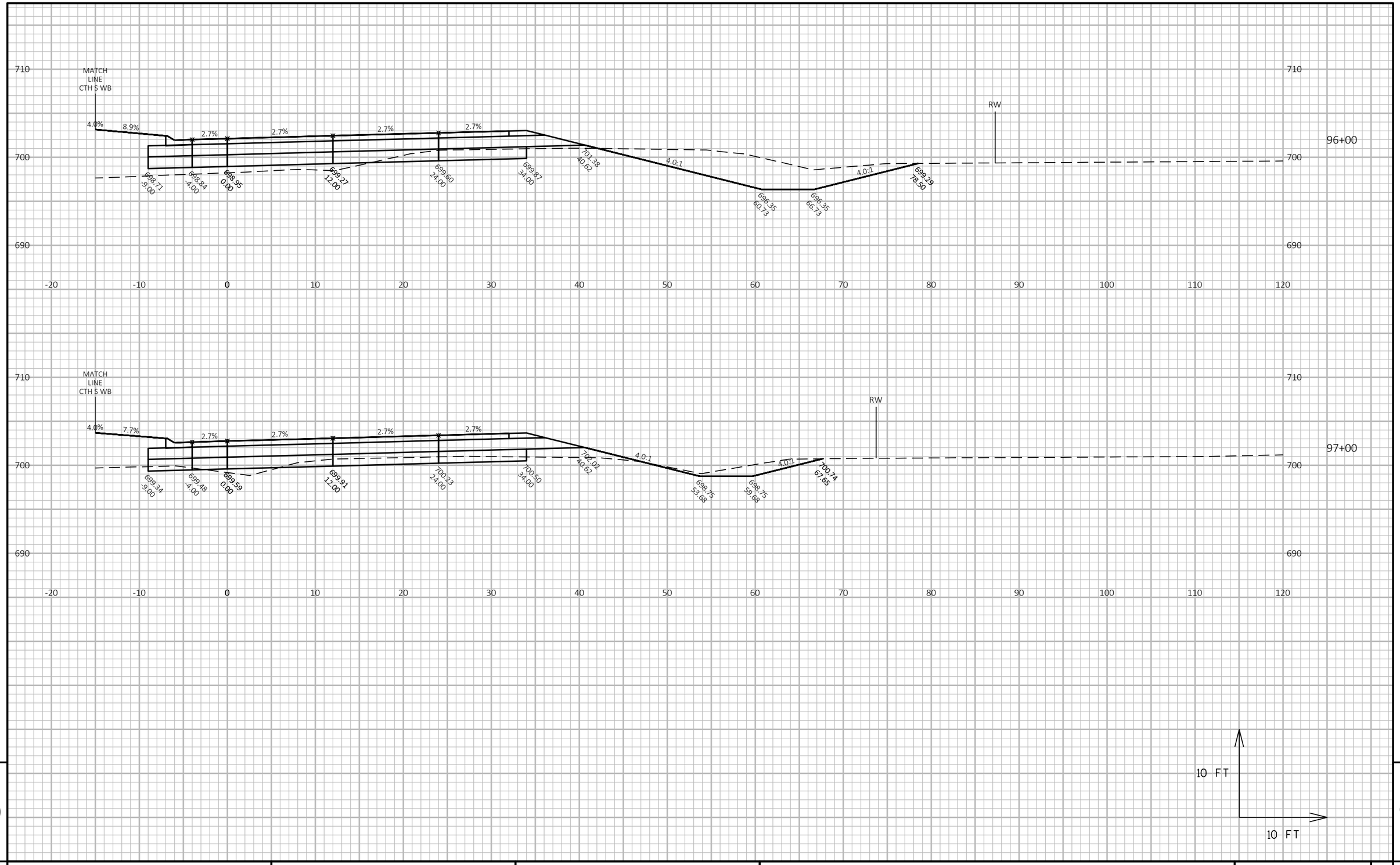

PROJECT ID: RD16-003	HWY: CTH S	COUNTY: KENOSHA	CROSS SECTIONS: CTH S EASTBOUND	SHEET 418	E

FILE NAME : T:\1165811\CIVIL3D\1165811\SHEETSPLAN\090201-XS.DWG PLOT DATE : 5/12/2020 8:01 AM PLOT BY : GUILLAMA, TINA PLOT NAME :

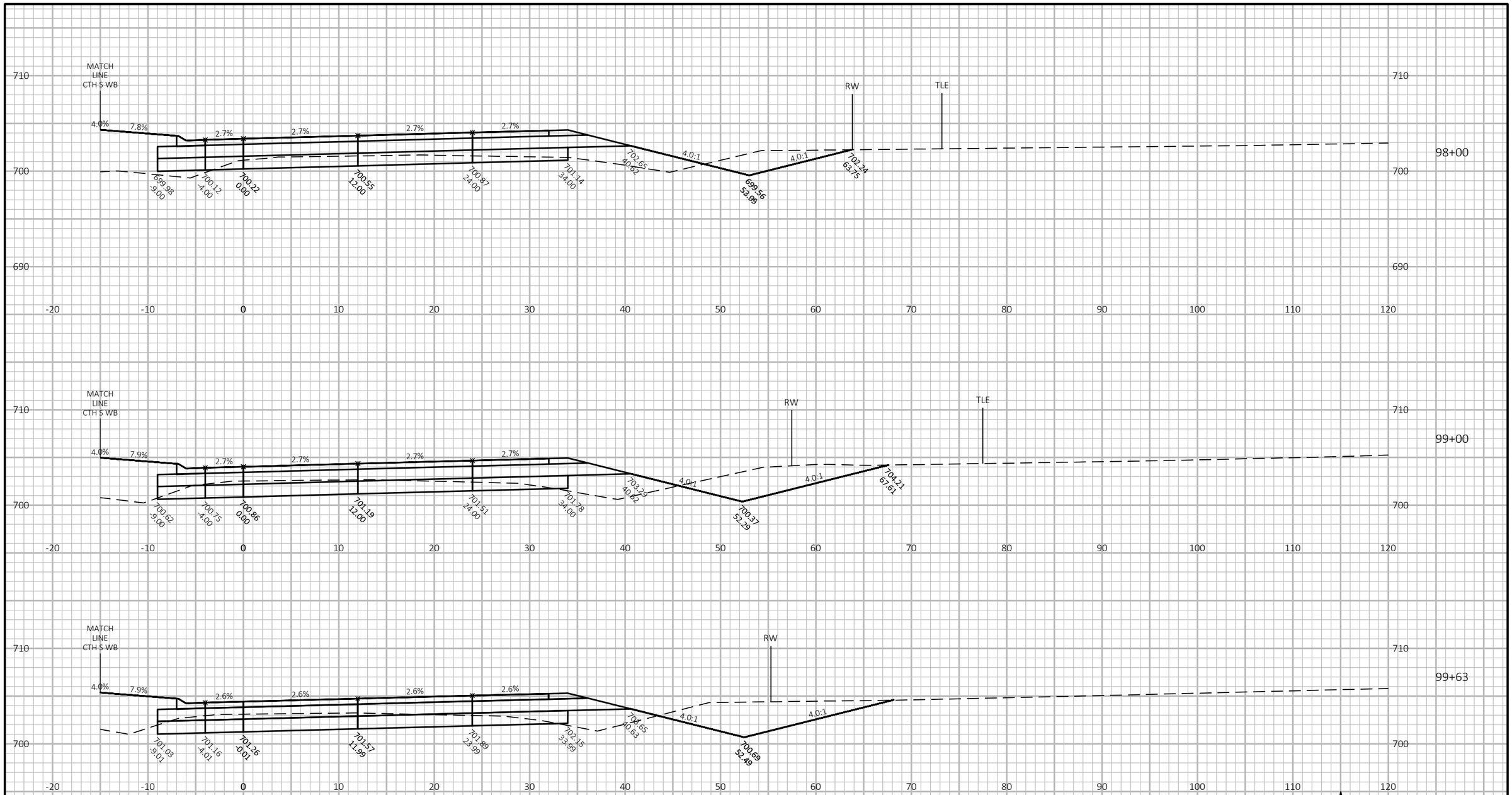

9

9

PROJECT ID: RD16-003	HWY: CTH S	COUNTY: KENOSHA	CROSS SECTIONS: CTH S EASTBOUND	SHEET 419	E

FILE NAME : T:\1165811\CIVIL3D\1165811\SHEETSPLAN\090201-XS.DWG PLOT DATE : 5/12/2020 8:01 AM PLOT BY : GUILLAMA, TINA PLOT NAME :

WISDOT/CADDS SHEET 49

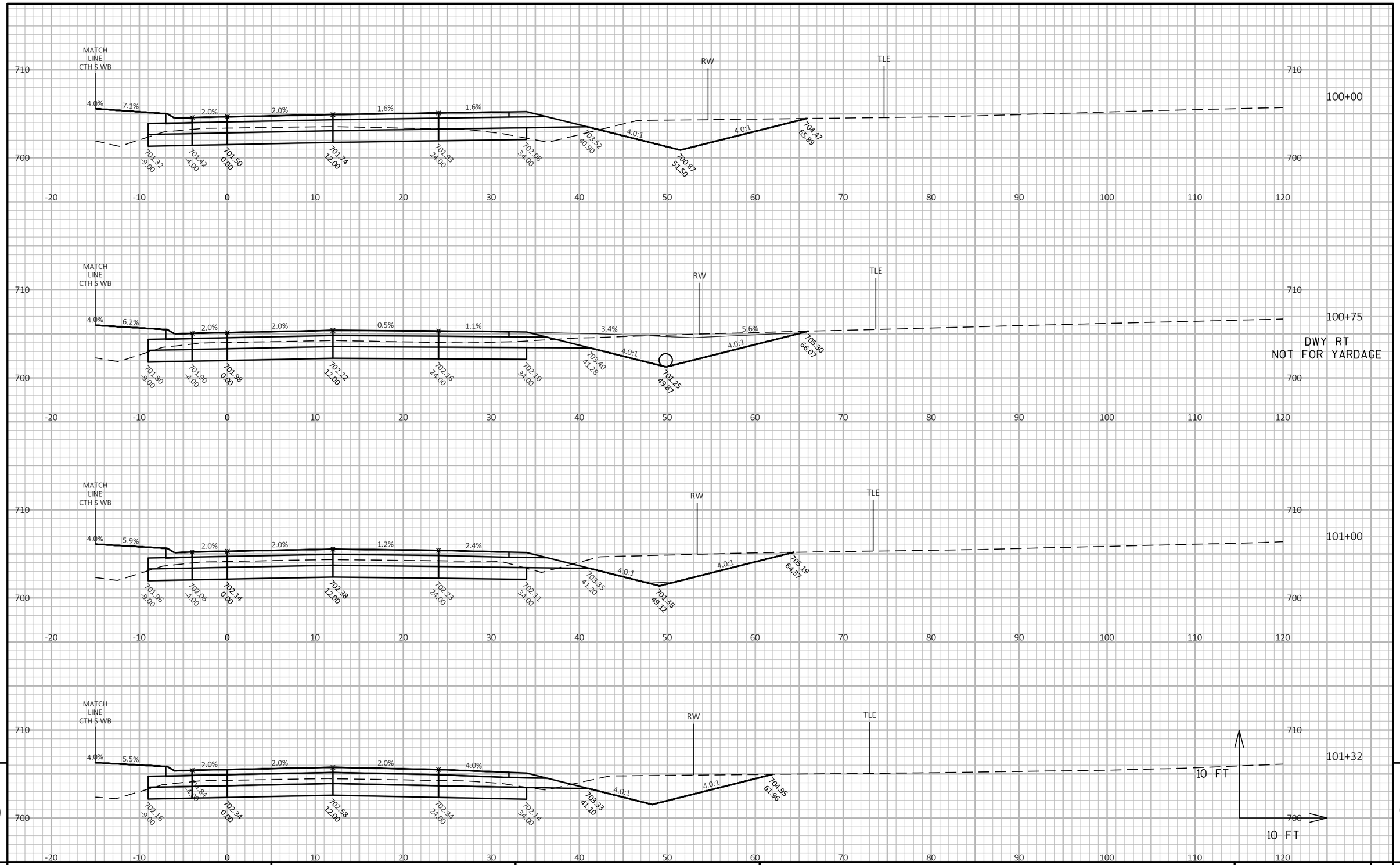

9

9

PROJECT ID: RD16-003	HWY: CTH S	COUNTY: KENOSHA	CROSS SECTIONS: CTH S EASTBOUND	SHEET 420	E

FILE NAME : T:\1165811\CIVIL3D\1165811\SHEETSPLAN\090201-XS.DWG PLOT DATE : 5/12/2020 8:01 AM PLOT BY : GUILLAMA, TINA PLOT NAME :

WISDOT/CADDS SHEET 49

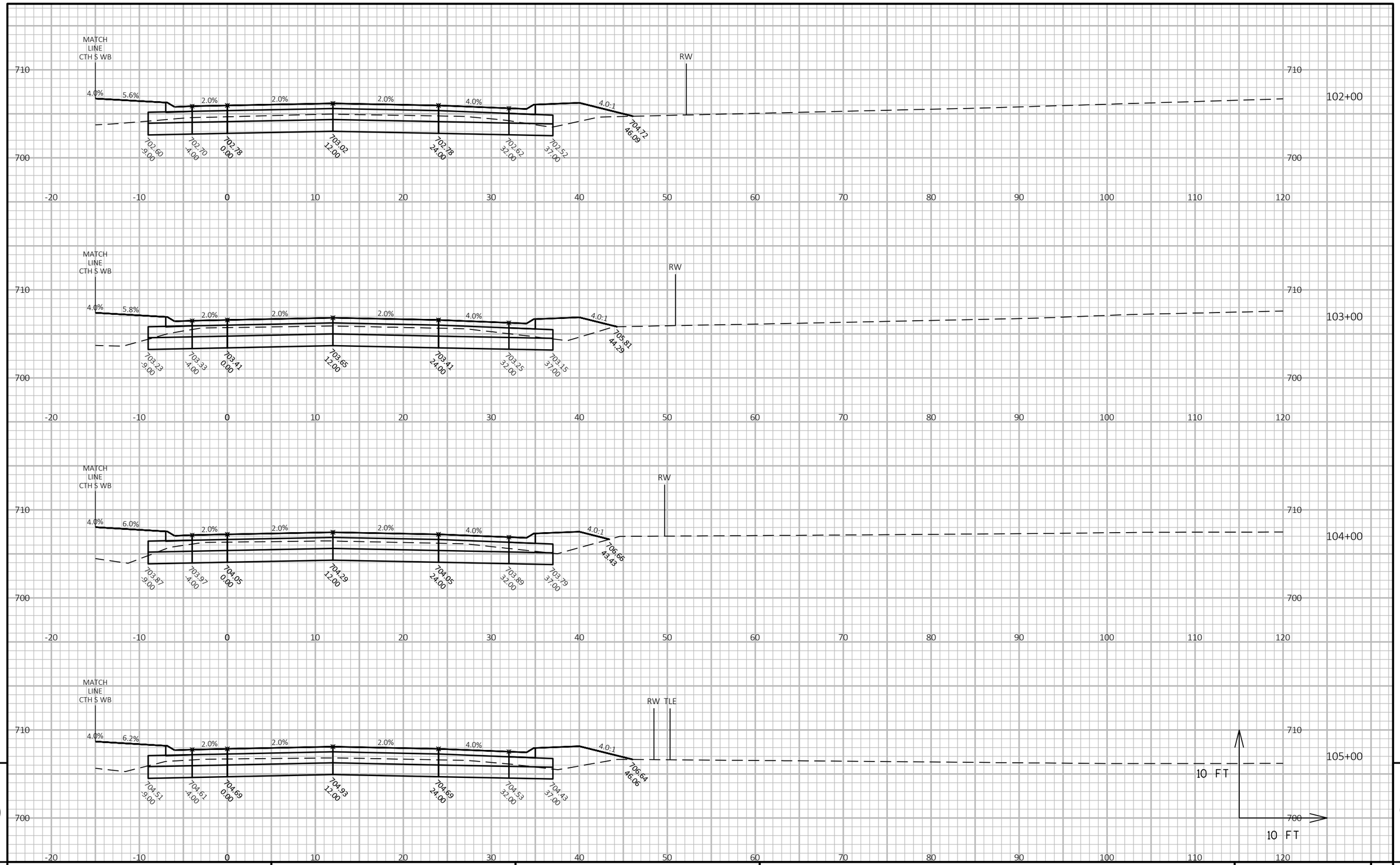

9

9

PROJECT ID: RD16-003	HWY: CTH S	COUNTY: KENOSHA	CROSS SECTIONS: CTH S EASTBOUND	SHEET 421	E

FILE NAME : T:\1165811\CIVIL3D\1165811\SHEETSPLAN\090201-XS.DWG PLOT DATE : 5/12/2020 8:01 AM PLOT BY : GUILLAMA, TINA PLOT NAME :

WISDOT/CADDS SHEET 49

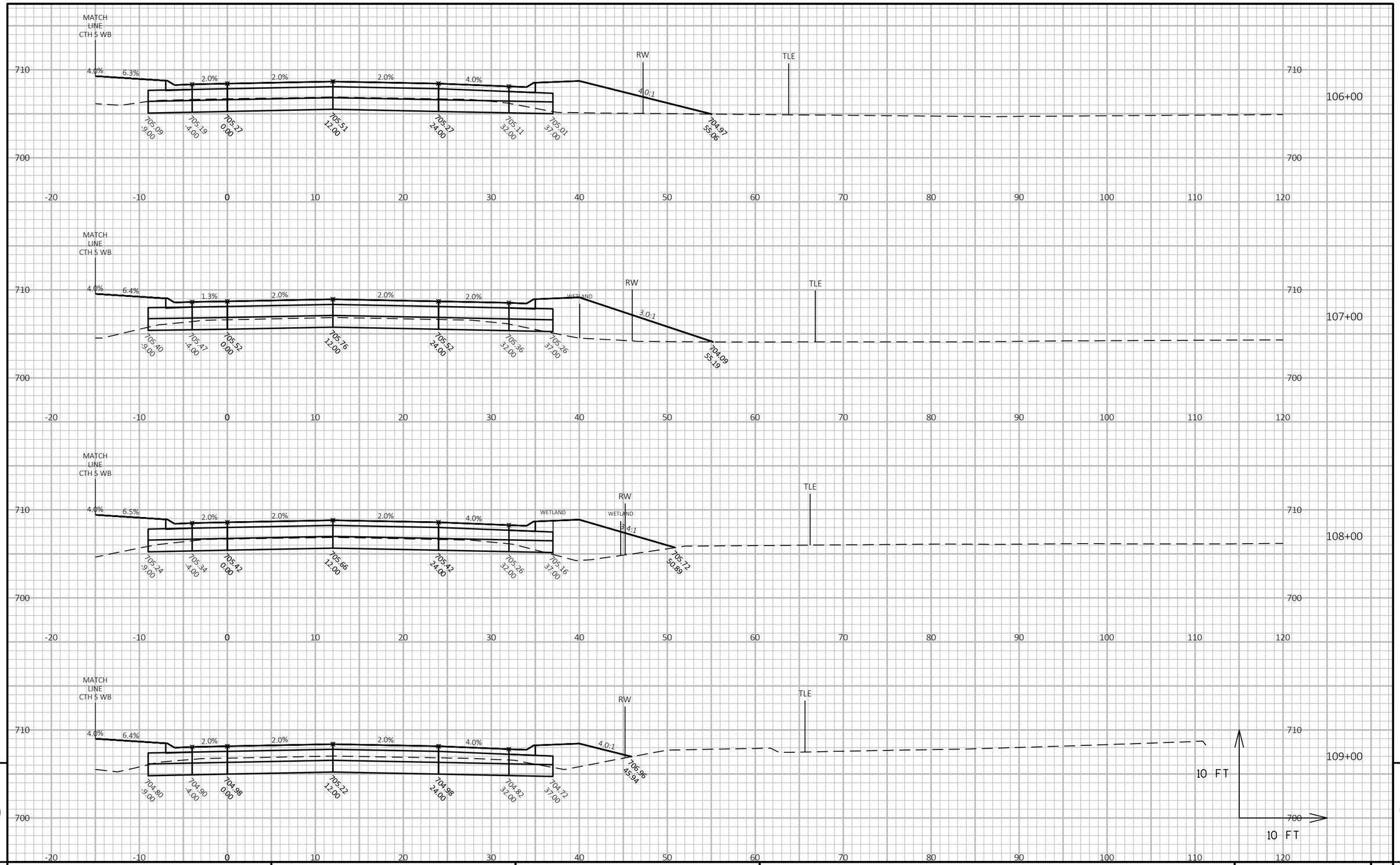

9

9

PROJECT ID: RD16-003	HWY: CTH S	COUNTY: KENOSHA	CROSS SECTIONS: CTH S EASTBOUND	SHEET 422	E

FILE NAME : T:\1165811\CIVIL3D\1165811\SHEETSPLAN\090201-XS.DWG PLOT DATE : 5/12/2020 8:02 AM PLOT BY : GUILLAMA, TINA PLOT NAME :

WISDOT/CADDS SHEET 49

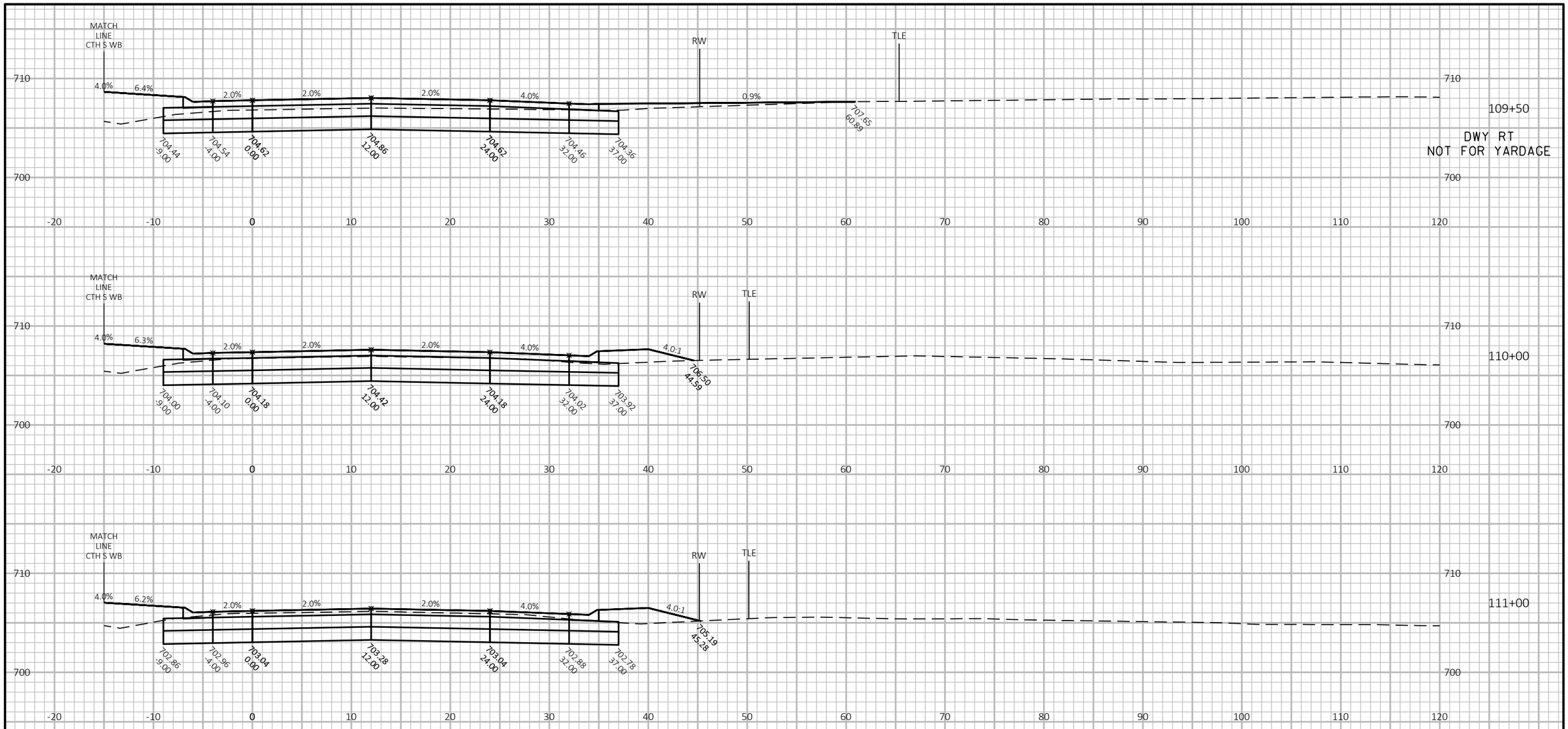

9

9

PROJECT ID: RD16-003	HWY: CTH S	COUNTY: KENOSHA	CROSS SECTIONS: CTH S EASTBOUND	SHEET 423	E

FILE NAME : T:\1165811\CIVIL3D\1165811\SHEETSPLAN\090201-XS.DWG PLOT DATE : 5/12/2020 8:02 AM PLOT BY : GUILLAMA, TINA PLOT NAME :

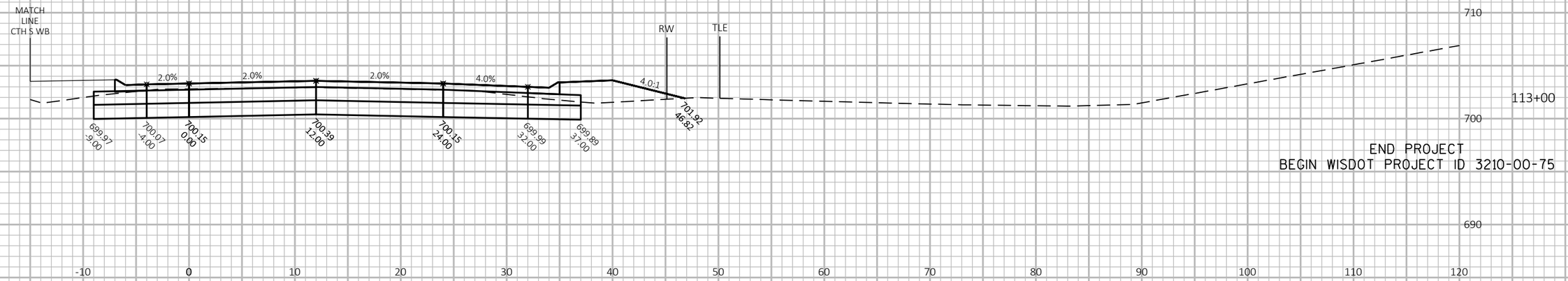

113+00

END PROJECT
BEGIN WISDOT PROJECT ID 3210-00-75

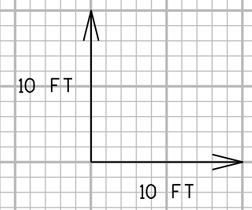

9

9

PROJECT ID: RD16-003	HWY: CTH S	COUNTY: KENOSHA	CROSS SECTIONS: CTH S EASTBOUND	SHEET 424	E

FILE NAME : T:\1165811\CIVIL3D\1165811\SHEETSPLAN\090201-XS.DWG PLOT DATE : 5/12/2020 8:02 AM PLOT BY : GUILLAMA, TINA PLOT NAME :

WISDOT/CADDS SHEET 49

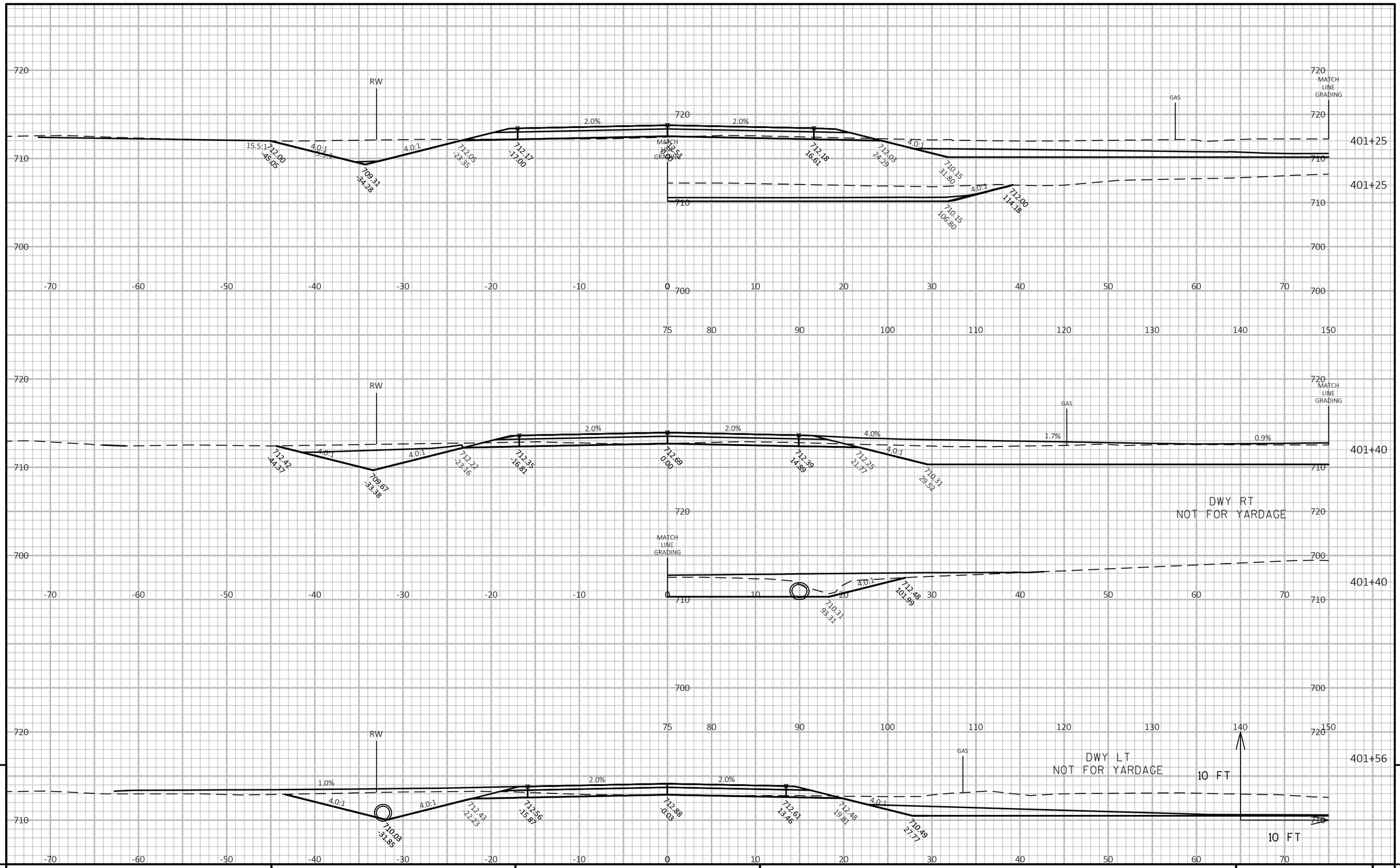

9

PROJECT ID: RD16-003	HWY: CTH S	COUNTY: KENOSHA	CROSS SECTIONS: 102ND AVENUE	SHEET 425	E

FILE NAME : T:\1165811\CIVIL3D\1165811\SHEETSPLAN\090203-XS.DWG PLOT DATE : 5/12/2020 8:50 AM PLOT BY : GUILLAMA, TINA PLOT NAME :

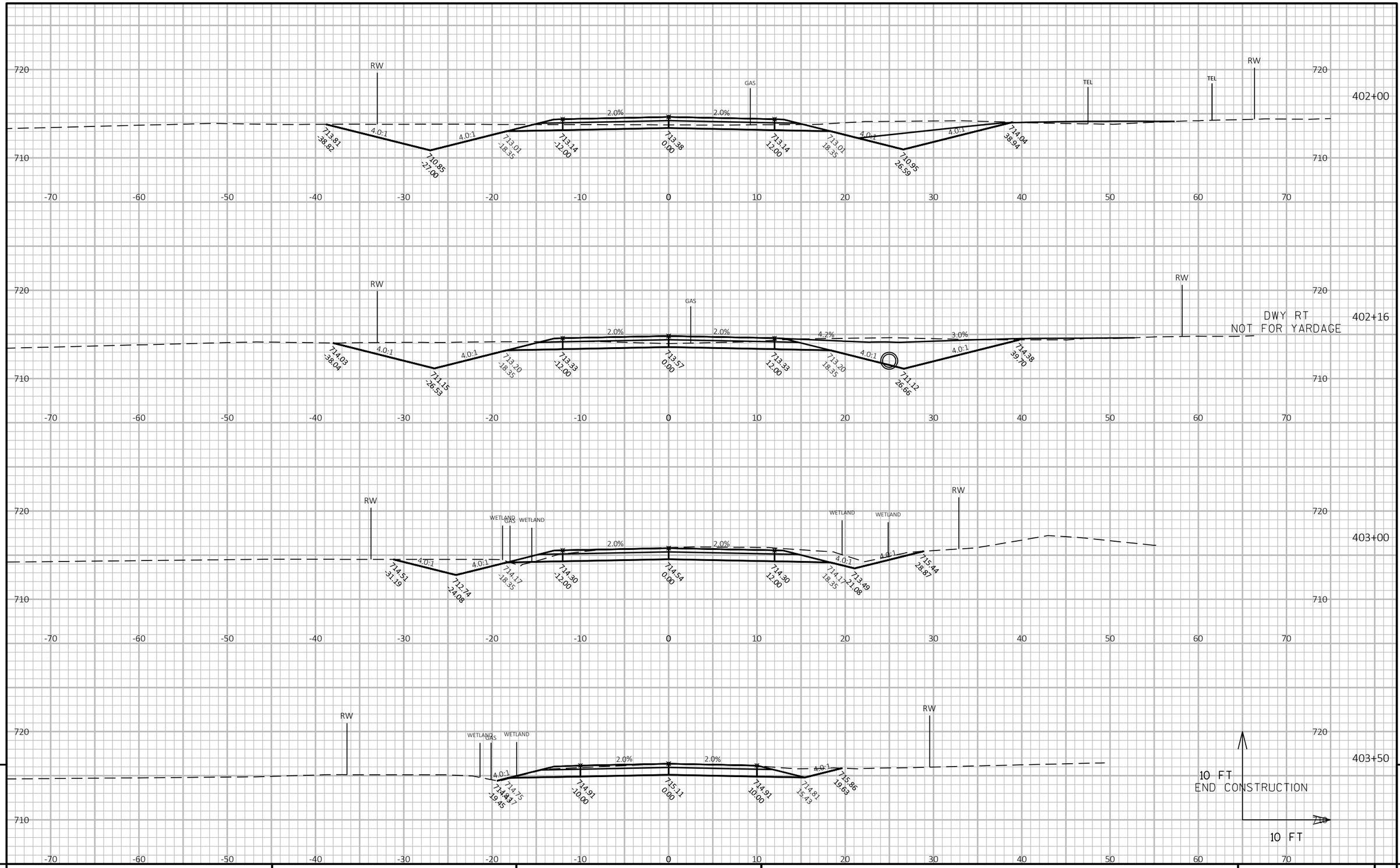

9

9

PROJECT ID: RD16-003	HWY: CTH S	COUNTY: KENOSHA	CROSS SECTIONS: 102ND AVENUE	SHEET 426	E

FILE NAME : T:\1165811\CIVIL3D\1165811\SHEETSPLAN\090203-XS.DWG PLOT DATE : 5/12/2020 8:50 AM PLOT BY : GUILLAMA, TINA PLOT NAME :

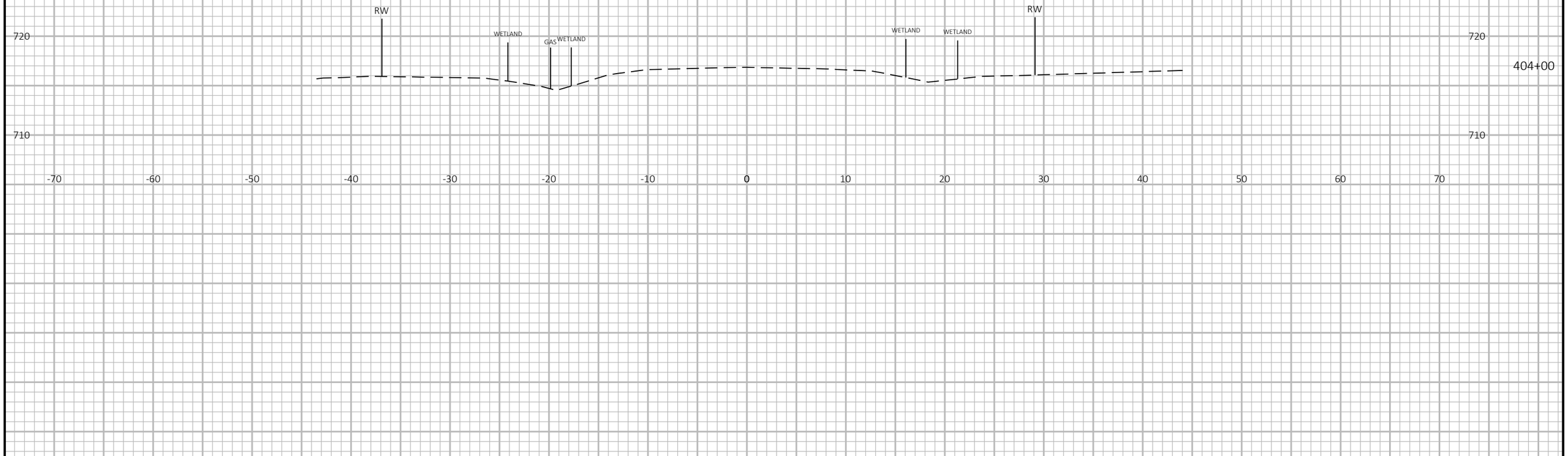

9

9

PROJECT ID: RD16-003	HWY: CTH S	COUNTY: KENOSHA	CROSS SECTIONS: 102ND AVENUE	SHEET 427	E

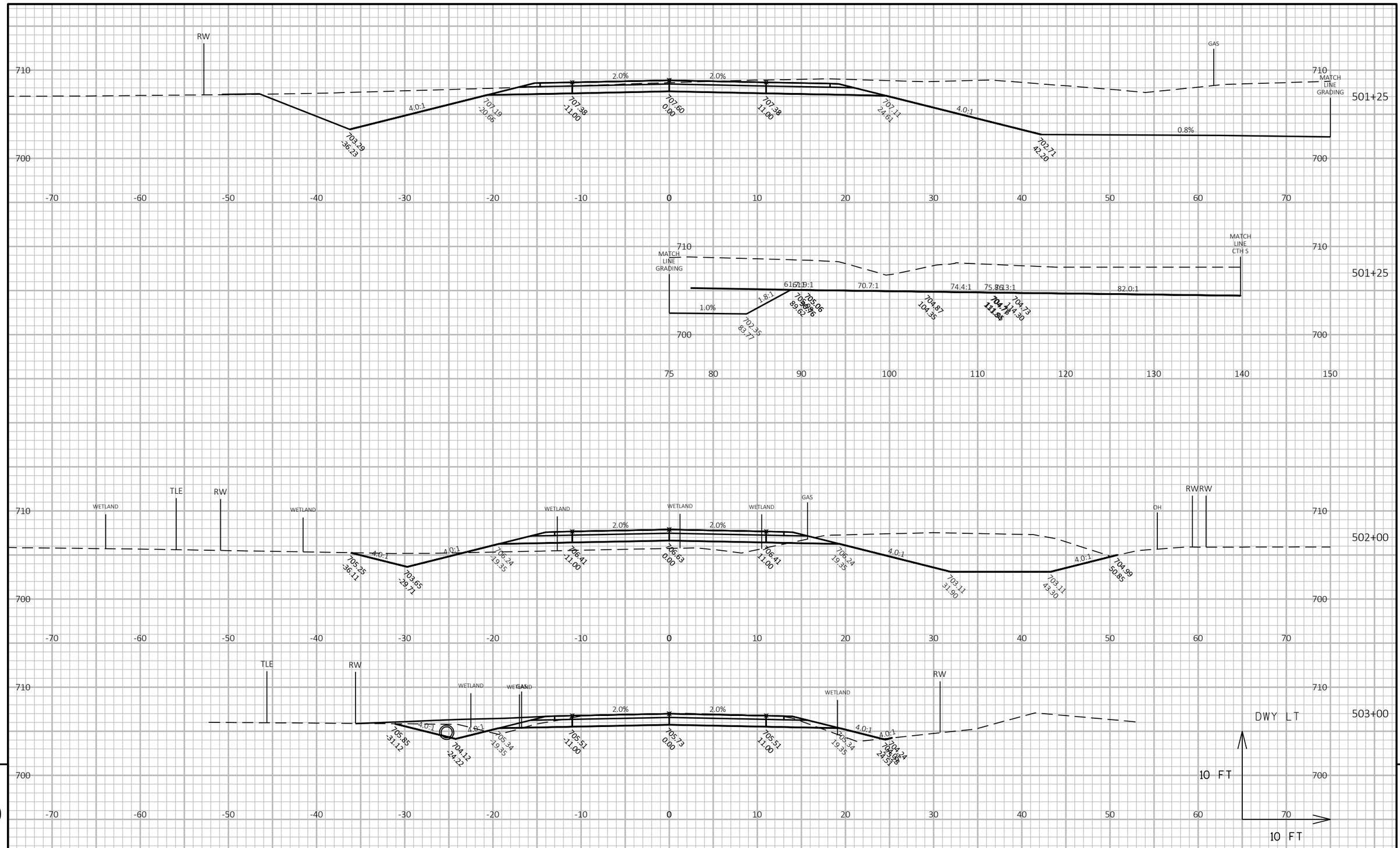

PROJECT ID: RD16-003	HWY: CTH S	COUNTY: KENOSHA	CROSS SECTIONS: 100TH AVENUE	SHEET 428	E

FILE NAME : T:\1165811\CIVIL3D\1165811\SHEETSPLAN\090203-XS.DWG PLOT DATE : 5/12/2020 8:51 AM PLOT BY : GUILLAMA, TINA PLOT NAME :

WISDOT/CADDS SHEET 49

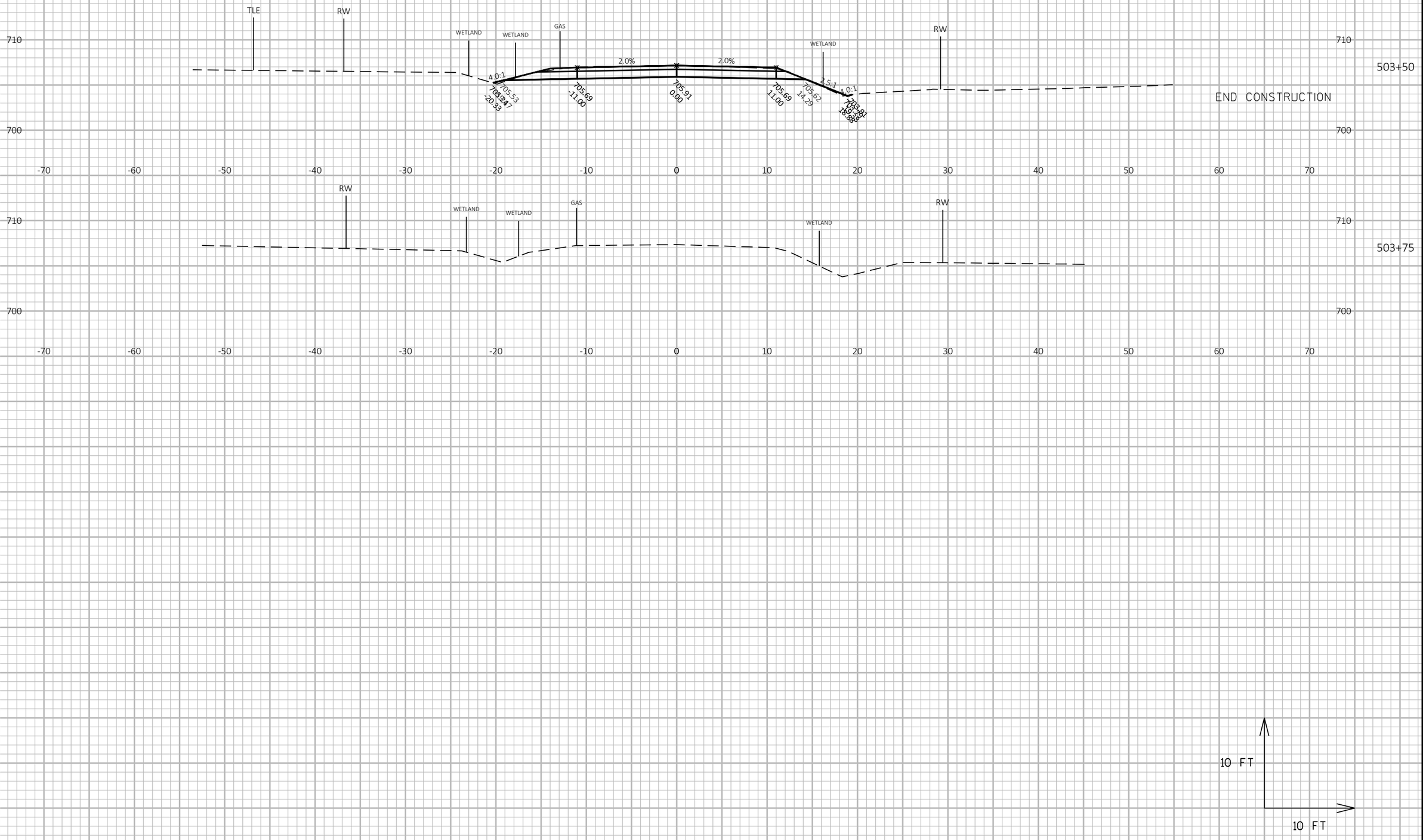

9

9

PROJECT ID: RD16-003	HWY: CTH S	COUNTY: KENOSHA	CROSS SECTIONS: 100TH AVENUE	SHEET 429	E

FILE NAME : T:\1165811\CIVIL3D\1165811\SHEETSPLAN\090203-XS.DWG PLOT DATE : 5/12/2020 8:51 AM PLOT BY : GUILLAMA, TINA PLOT NAME :

WISDOT/CADDS SHEET 49

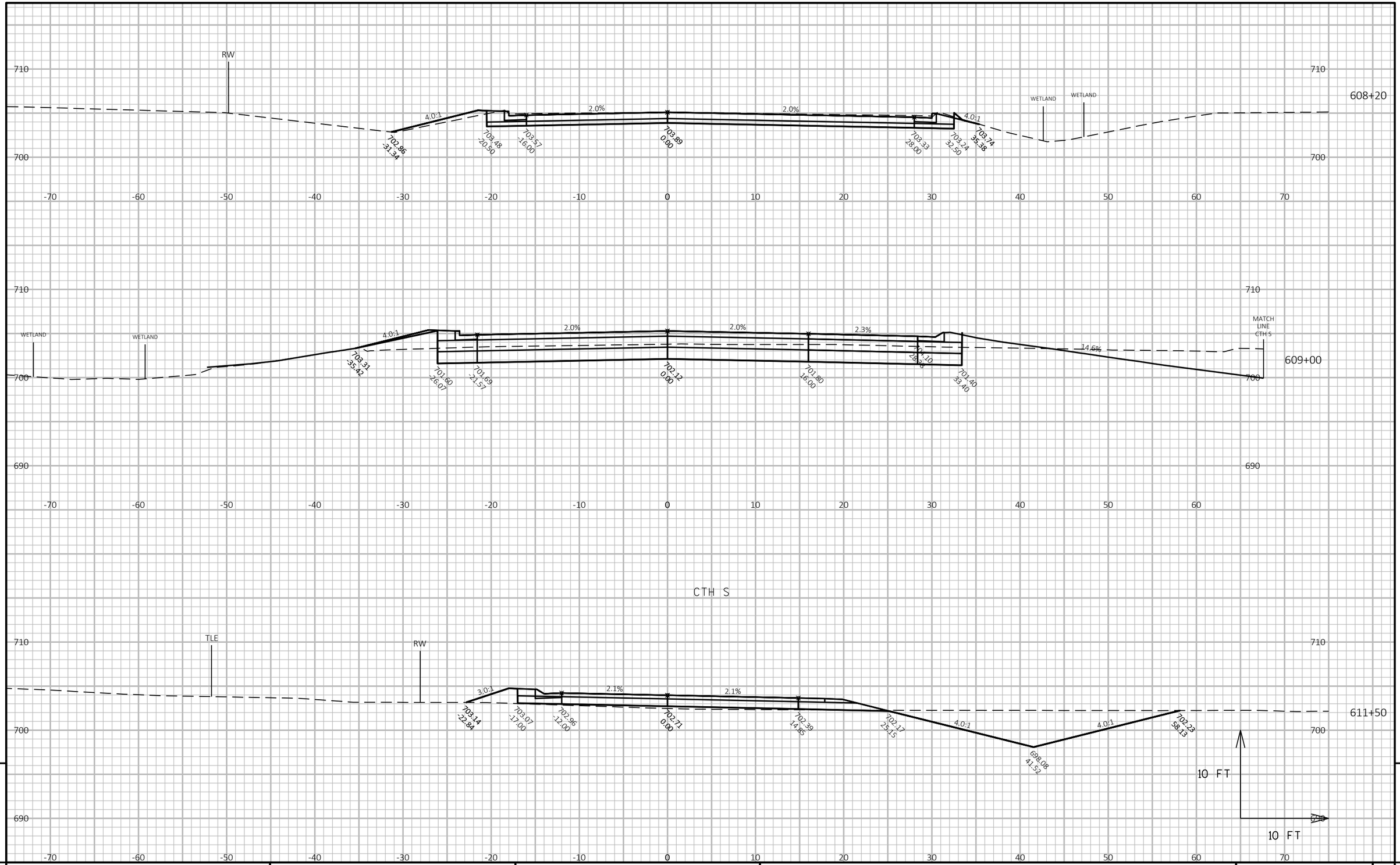

9

9

PROJECT: RD16-003	HWY: CTH S	COUNTY: KENOSHA	CROSS SECTIONS: 38TH STREET	SHEET 430	E

FILE NAME : T:\1165811\CIVIL3D\1165811\SHEETSPLAN\090203-XS.DWG PLOT DATE : 5/12/2020 9:27 AM PLOT BY : GUILLAMA, TINA PLOT NAME :

WISDOT/CADDS SHEET 49

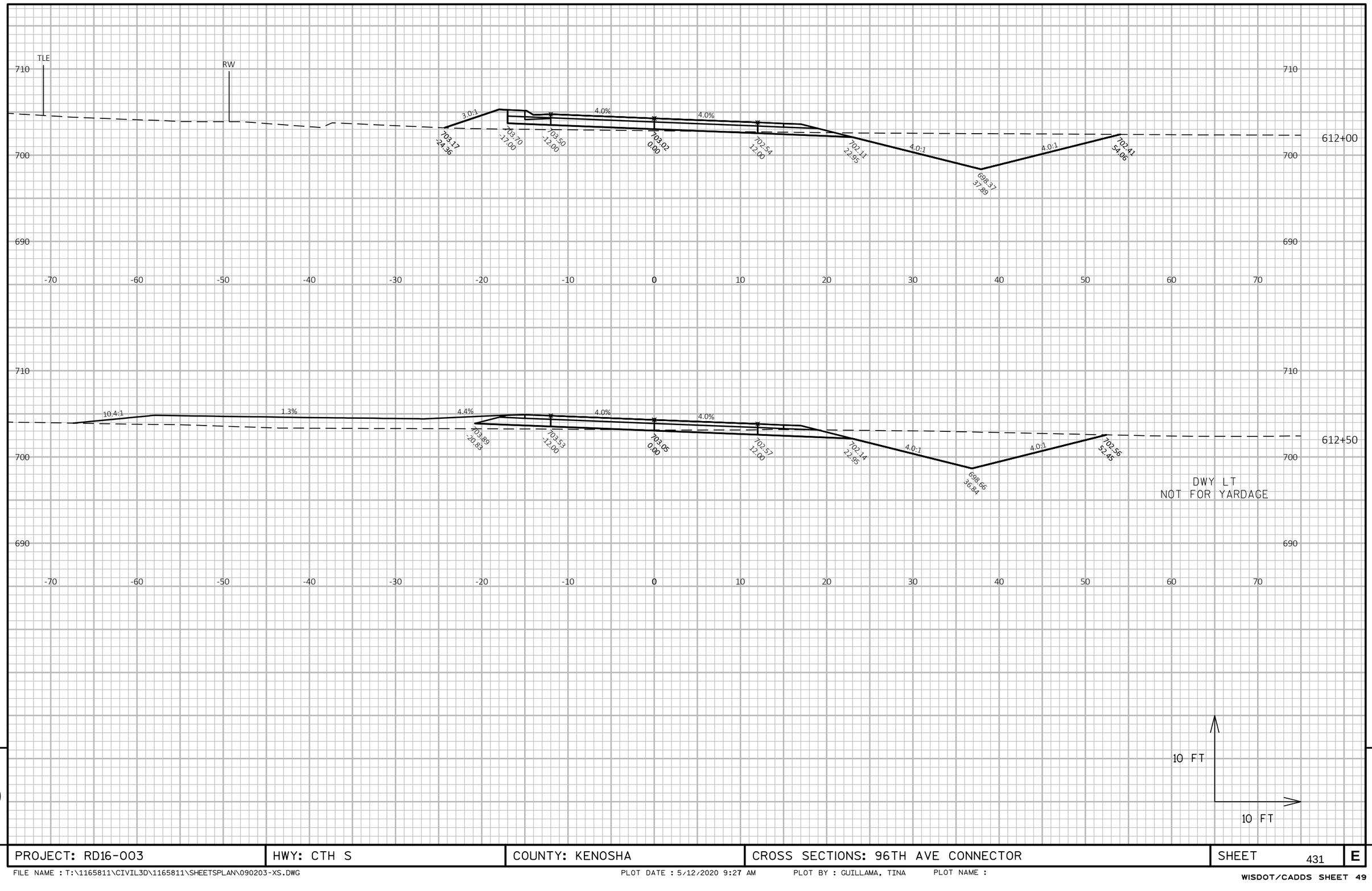

9

9

PROJECT: RD16-003	HWY: CTH S	COUNTY: KENOSHA	CROSS SECTIONS: 96TH AVE CONNECTOR	SHEET 431	E

FILE NAME : T:\1165811\CIVIL3D\1165811\SHEETSPLAN\090203-XS.DWG PLOT DATE : 5/12/2020 9:27 AM PLOT BY : GUILLAMA, TINA PLOT NAME :

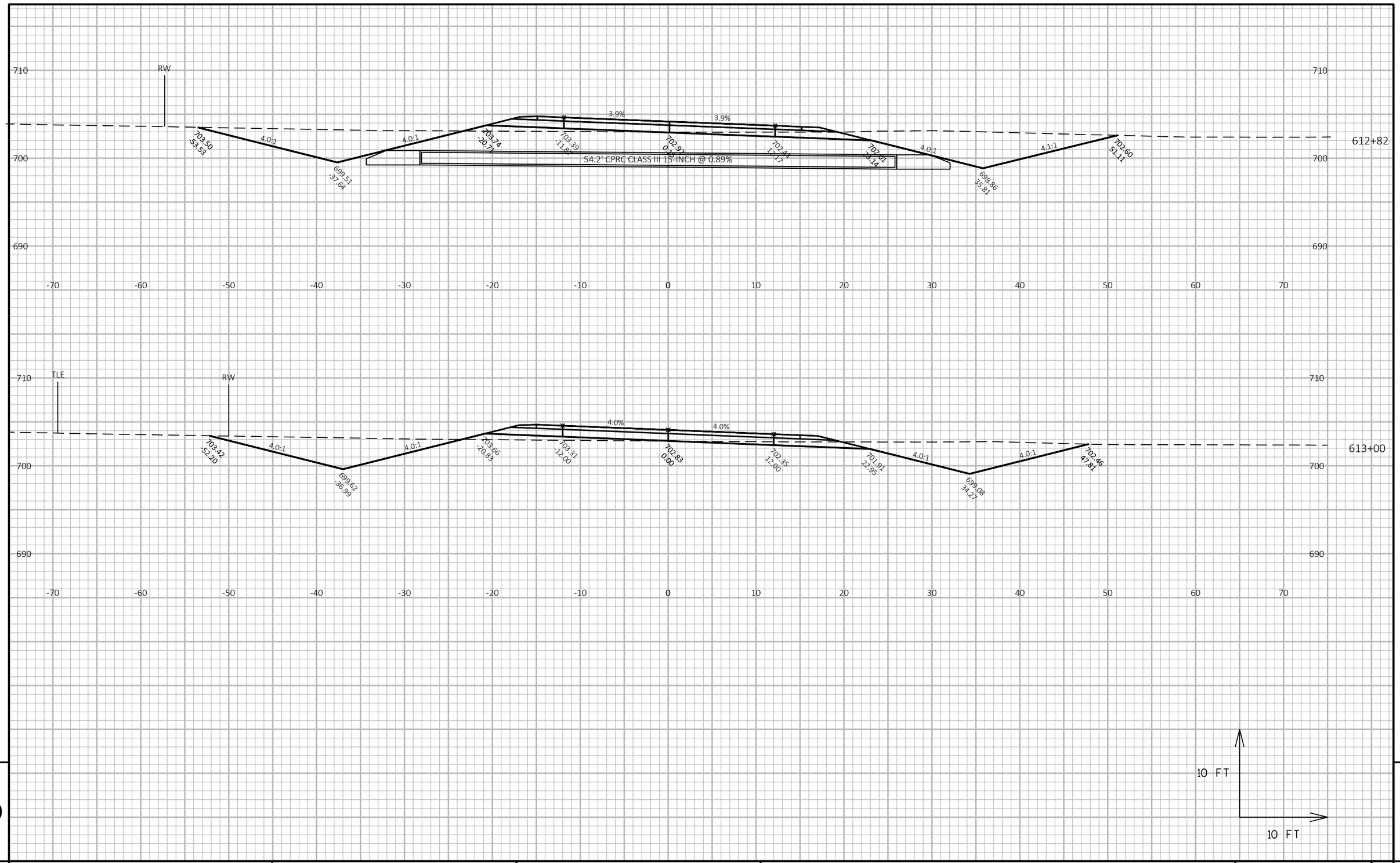

9

9

PROJECT: RD16-003	HWY: CTH S	COUNTY: KENOSHA	CROSS SECTIONS: 96TH AVE CONNECTOR	SHEET 432	E

FILE NAME : T:\1165811\CIVIL3D\1165811\SHEETSPLAN\090203-XS.DWG PLOT DATE : 5/12/2020 9:27 AM PLOT BY : GUILLAMA, TINA PLOT NAME :

WISDOT/CADDS SHEET 49

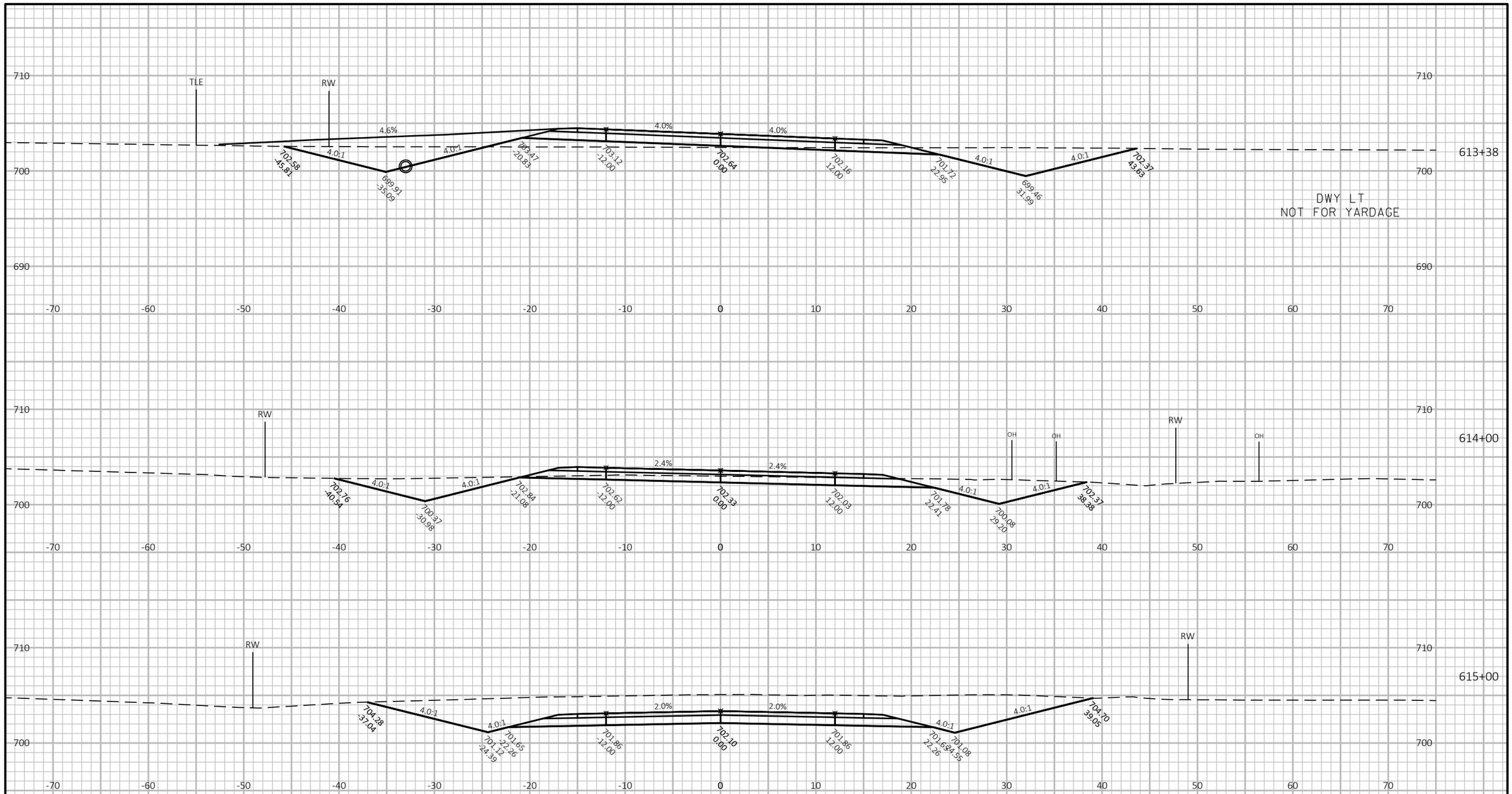

9

9

PROJECT: RD16-003	HWY: CTH S	COUNTY: KENOSHA	CROSS SECTIONS: 96TH AVE CONNECTOR	SHEET 433	E

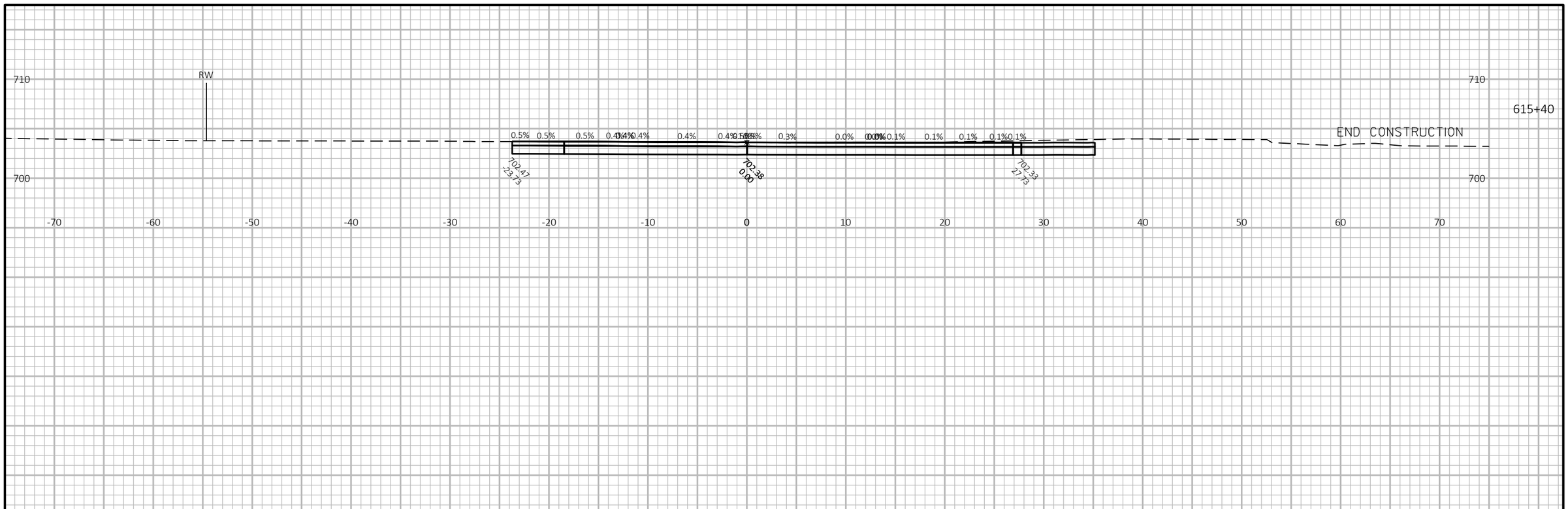

9

9

PROJECT: RD16-003	HWY: CTH S	COUNTY: KENOSHA	CROSS SECTIONS: 96TH AVE CONNECTOR	SHEET 434	E